SWITCH CIRCUIT	
WHEN CARD IS EJECTED	WHEN CARD IS INSERTED

MATERIAL AND FINISH AS BELOW					
A	Housing	LCP UL94V-0, Color: Black	E		
B	Contact	Brass C2680, Gold Flash	F		
C	Ground	Phosphor Bronze, Gold Flash	G		
D			H		

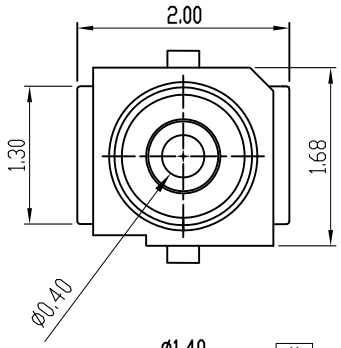

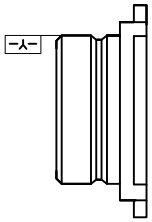

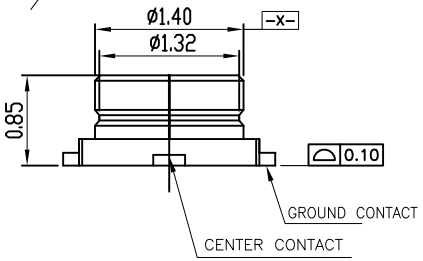

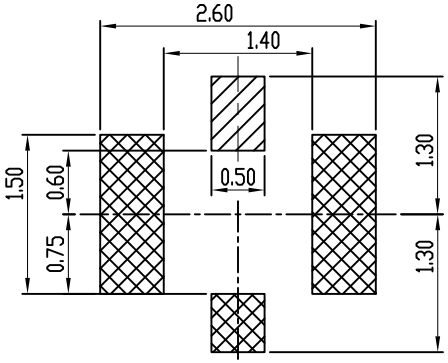

RECOMMENDED PCB LAYOUT

(TOLERANCE:±0.05)

CENTER CONTACT

GROUND CONTACT

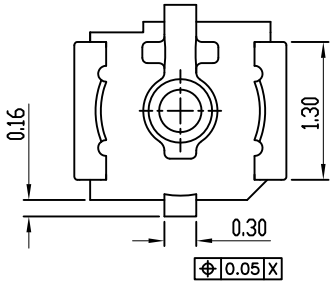

SPECIFICATION:

1. ELECTRICAL
1.1 Current Rating: 1A
1.2 Voltage Rating: 60VAC
1.3 Contact Resistance:
Inner Contact | Initially: 20mΩ
Ground Contact | Initially: 20mΩ
1.4 Insulation Resistance: 500MΩ
1.5 Dielectric Withstanding Voltage: 200VAC for 1 minute
1.6 VSWR: 100MHz to 3GHz | 1.3Max
3GHz to 6GHz | 1.4Max
1.7 Nominal Characteristic Impedance : 50Ω
1.8 Applicable Frequency : 100MHz to 6GHz

2. MECHANICAL
2.1 Durability: 30 Cycle

3. ENVIRONMENTAL
3.1 Operating temperature range: -40°C to +85°C
3.2 Storage temperature range: -40°C to +85°C

4. SOLDER ABILITY
4.1 Recommended IR Reflow Temperature: 260°C

PIN ASSIGNMENT

PRODUCT NO.	DESCRIPTION
MRF3	MRF1 , Contact Area:Gold Flash

REV.	DESCRIPTION	DATE
3	Revise:	
2	Revise:	
1	Revise:	

REV.	DESCRIPTION	DATE

UNLESS OTHERWISE SPECIFIED TOLERANCE

ANGLES	ANG.	±5°
LINEAR	0.	±0.3
	0.0	±0.25
	0.00	±0.20
SCALE	AS SHOWED	UNIT: mm
DRAWN	Willis	2014/07/17
CHECKED	Angel	2014/07/17
APPROVED	Ken	2014/07/17

SIZE A4 REV. 1.0

ATTEND

www.attend.com.tw

DRAWN NAME: Micro Coaxial RF Connector 0.85mm Hight

PRODUCT NO. 321B-22085

FILE NAME 321B-22085_B_1