Timing Product Solutions

CARDINAL COMPONENTS

Crystals
Oscillators
Programmable
TCXO
VCXO
VC-TCXO
OCXO
Multi-Output Frequency
Hi-Rel
Platinum
Resonators
Equipment

Milestones

2009	Introduced the world's first Programmable TCXO 1.5 to 800 MHz, 2.5 PPM
2008	Introduced the world's Hi Rel Series < 0.7ps RMS jitter
2008	Established Brazil Direct OEM Sales center & Brazil Programming center
2007	Introduced Programmable Platinum Series PECL, LVPECL to 800 MHz
2007	Introduced Production Temperature Test Systems 1-800 MHz
2006	Introduced PG 3001 Field programmer 1 to 800 MHz
2005	Established China Direct OEM Sales Channel
2004	Patent Granted on Programmable Oscillator
2003	Introduced world's first Re-configurable Programmable Oscillator
2002	Introduced world's first Multi-Frequency Programmable Oscillator
2002	Winner Product of the Year 2002
2001	ISO 9001-2000 Certified
2000	Winner Product of the Year 2000
1999	Introduced world's first Field Programmable Oscillator
1999	Introduced world's first Field Oscillator Programmer PG2000 1 to 133 MHz
1998	Established Distributor Channel Worldwide
1997	ISO Certified
1990	Established Manufacturers Representative channel worldwide
1987	Opened Far East Manufacturing Facility in Shenzhen, China
1986	Founded

Cardinal Components, Inc.
155 Route 46 West
Wayne, NJ 07470

TEL: (973)785-1333
E-MAIL: sales@cardinalxtal.com
WEB: http://www.cardinalxtal.com

Index

Cover		
Milestones		
Series Index		
Products		
	Crystals	C-1
	Oscillators	O-1
	Programmable	P
	TCXO	T-1
	VCXO	V-1
	VC-TCXO	VT-1
	OCXO	OX-1
	Multi-Output	M-1
	Hi-Rel	H-1
	Platinum	PL-1
	Resonators	R-1
	Equipment	E-1
Appendix		
	DIP Drawings	A-1
	Tape & Reel	A-2
	Solder Profile	A-3
	FIT	A-4
	ISO	A-5
	RoHS Material Declaration	A-6
	General C of C	A-7
	Distributor Listing	A-8
	Quartz Operation	A-14
	Glossary	A-18

Cardinal Components, Inc.
155 Route 46 West
Wayne, NJ 07470

TEL: (973)785-1333
E-MAIL: sales@cardinalxtal.com
WEB: http://www.cardinalxtal.com

Series Index

Series #	Page #		Series #	Page #		Series #	Page #		Series #	Page #
C11	O-58		CCE5C	M-9		CHL	O-19		CTAM	T-9
C49	C-1		CCE5E	M-72		CLP3,4,5,6	C-2		CTCX	T-4
C49J	C-6		CCE5RC	M-39		CM1,5	C-3		CTED	T-16
CAE	O-26		CCE5RE	M-97		CM1J	C-7		CTF6, CTF8	C-5
CAL	O-18		CCE6C	M-13		CMS8	C-4		CTH11	O-56
CAM	O-10		CCE6E	M-76		COA	OX-1		CTHE	T-18
CAMs	O-4		CCE6ET	M-122		COOV7			CTHL	T-15
CAV	V-1		CCE6RC	M-44		COS	0X-2		CTL	T-14
CC065H	O-9		CCE6RE	M-103		CP715	C-8		CTPP	T-10
CC065L	O-8		CCT2C	M-17		CPFB	C-9		CTV4	VT-6
CC065S	O-7		CCT4C	M-21		CPO	O-17		CTV6	VT-7
CC121	V-2		CCT4E	M-80					CTVED	VT-8
CC123	VT-1		CCT4RC	M-49		CPP	0-34		CTVL	VT-9
CC127	V-3		CCT4RE	M-107		CPPD	O-44		CTX4	T-8
CC128	T-11		CCT5C	M-25		CPPE7	O-33		CTX5	T-1
CC129	VT-2		CCT5E	M-84		CPPE9	O-31		CTX5V	VT-10
CC131	T-6		CCT5RC	M-54		CPPFX	O-39		CTX6	T-2
CC132	T-12		CCT5RE	M-112		CPPHE	O-30		CTX7	T-3
CC133	VT-3		CCT6C	M-29		CPPHV	O-22		CTX8	T-5
CC134	VT-4		CCT6E	M-88					CTX8V	VT-11
CC137	O-16		CCT6RC	M-59		CPPL	O-79		CV01	V-9
CC142	VT-5		CCT6RE	M-117		CPPV7	O-25		CV04	V-10
CC154	V-4		CD02	R-1		CPPV9	O-23		CVPP	V-11
CC165	V-5		CFE4	O-29		CS22	R-2		CX12A, CX12B	C-12
CC532	O-3		CFED	0-28		CS31	R-3		CX17A	C-13
CC85	O-2		CFL	O-20		CS51	R-4		CX325	C-14
CCE2C	M-1		CFL4	O-21		CS53	R-5		CX406	C-15
CCE3E	M-64		CFVE	V-6		CSM1	C-10		CX425	C-16
CCE4C	M-64		CFVED	V-7		CSM4,5	O-11		CX45	C-17
CCE4E	M-68		CFVL	V-8		CSSC	O-13		CX5	C-18
CCE4RC	M-33		CH11	O-56		CT4S	T-7		CX505	C-19
CCE4RE	M-92		CHE	0-27		CTAE	T-17		CX532	C-21
						CTAL	T-13		CX635A, CX635B	C-22

Cardinal Components, Inc.
155 Route 46 West
Wayne, NJ 07470

TEL: (973)785-1333
E-MAIL: sales@cardinalxtal.com
WEB: http://www.cardinalxtal.com

CARDINAL COMPONENTS

Programmable Section

Page Number	Output Type	Programmable Oscillator	PCB Mount	Package Dimension (LxWxH) in mm	Package Style	Voltage (V)	Stability	Freq Range Low (MHz)	Freq Range High (MHz)
O-3	CMOS	**CAMs**	SMD	3.2x2.5x1.0, 5x3.2x1.2, 5x7x1.7	Ceramic	1.8, 2.5, 3.3	See Datasheet	1.5	133
O-7	CMOS, LVTTL	**CAM**	SMD	Half, Full, 5x3.2x1.2, 5x7x1.7, 9x14x4.8	Can, Ceramic	2.5, 3.3	See Datasheet	1.5	200
O-8	CMOS, LVTTL	**CSSC**	SMD	5x3.2x1.2, 5x7x1.7	Ceramic	2.5, 3.3	See Datasheet	1.5	200
O-15	LVDS	**CPPHV**	SMD	5x7x1.8	Ceramic	3.3	See Datasheet	200	700
O-16	LVDS	**CPPV9**	SMD	9.4x11.4x3.0	FR4	3.3, 5.0	See Datasheet	1	133
O-17	LVDS	**CPPV7**	SMD	5x7x1.8x1.8	Ceramic	3.3	See Datasheet	1	200
O-18	LVPECL	**CAE**	SMD	5x7x1.8	Ceramic	3.3	See Datasheet	1.5	200
O-19	LVPECL	**CHE**	SMD	5x7x1.8	Ceramic	3.3	See Datasheet	200	800
O-22	LVPECL	**CPPHE**	SMD	5x7x1.8	Ceramic	3.3	See Datasheet	200	700
O-23	LVPECL	**CPPE9**	SMD	9.4x11.4X3.0	FR4	3.3, 5.0	See Datasheet	1	133
O-24	LVPECL	**CPPE7**	SMD	5x7x1.8	Ceramic	3.3	See Datasheet	1	200
O-25	CMOS	**CPP**	SMD, TH	Half, Full, 5x3.2x1.2, 5x7x1.7, 9x14x4.8	Can, Ceramic, Plastic	2.7, 3.3, 5.0	See Datasheet	0.5	133
O-26	CMOS	**CPPFX**	SMD, TH	Half, Full, 5x3.2x1.2, 5x7x1.7, 9x14x4.8	Can, Ceramic, Plastic	2.7, 3.3, 5.0	See Datasheet	0.5	133
O-27	CMOS	**CPPD**	SMD, TH	Half, Full, 5x3.2x1.2, 5x7x1.7, 9x14x4.8	Can, Ceramic, Plastic	2.7, 3.3, 5.0	See Datasheet	0.5	133
O-28	CMOS, TTL	**CPPL**	SMD, TH	Half, Full, 5x3.2x1.2, 5x7x1.7, 9x14x4.8	Can, Ceramic, Plastic	2.7, 3.3, 5.0	See Datasheet	0.5	133

Page Number	Output Type	Programmable TCXO	PCB Mount	Package Dimension (LxWxH) in mm	Package Style	Voltage (V)	Stability	Freq Range Low (MHz)	Freq Range High (MHz)
T - 9	CMOS	**CTAM**	SMD	5.2x7.2x3.1	FR4	3.3	2.5	1.5	200
T -10	CMOS	**CTPP**	SMD	9.6x11.4x3.0	FR4	3.3	2.5	38	640
T - 13	LVDS	**CTAL**	SMD	5.2x7.2x3.1	FR4	3.3	2.5	1.5	200
T - 15	LVDS	**CTHL**	SMD	5.2x7.2x3.1	FR4	3.3	2.5	200	800
T - 17	LVPECL	**CTAE**	SMD	5.2x7.2x3.1	FR4	3.3	2.5	9.6	32
T - 18	LVPECL	**CTHE**	SMD	5.2x7.2x3.1	FR4	3.3	2.5	1.5	200

Page Number	Output Type	Programmable VCXO	PCB Mount	Package Dimension (LxWxH) in mm	Package Style	Voltage (V)	Pull Range (ppm)	Freq Range Low (MHz)	Freq Range High (MHz)
V - 1	CMOS	**CAV**	SMD	5x7x1.8	Ceramic	3.3	100	1.5	200

Cardinal Components, Inc.
155 Route 46 West
Wayne, NJ 07470

TEL: (973)785-1333
E-MAIL: sales@cardinalxtal.com
WEB: http://www.cardinalxtal.com

Crystal Section

Page Number	Crystal	PCB Mount	Package Dimension (LxWxH) in mm	Package Style	Freq Range Low	Freq Range High	Units
C-1	**C49**	TH	11.1 x 4.7 x 13.6 Can	TH	1.8432	150	MHz
C-2	**CLP3,4,5,6**	TH	See Datasheet	TH	3.579	75	MHz
C-3	**CM1,5**	TH	7.8 x 3.2 x 6.0 Can	TH	10	175	MHz
C-4	**CMS8**	TH	3.0 X 3.0 X 8.9 Can	TH	3.579	64	MHz
C-5	**CTF6, CTF8**	TH	3.0 X 3.0 X 6.0 Can	TH	32.768	200	KHz
C-6	**C49J**	SMD	11.1 x 4.7 x 13.6 Can	SMD	1.8432	150	MHz
C-7	**CM1J**	SMD	7.8 x 3.2 x 8.1 Can	SMD	10	175	MHz
C-8	**CP715**	SMD	9.6 x 1.4 x 0.15 Plastic	SMD	32.768	32.768	kHZ
C-9	**CPFB**	SMD	8.7 x3.7 x 2.5 Plastic	SMD	32.768	32.768	KHz
C-10	**CSM1**	SMD	11.4 x 4.7 x 4.3 Can	SMD	3.579	75	MHz
C-11	**CSM4,5**	SMD	See Datasheet	SMD	3.579	75	MHz
C-12	**CX12A, CX12B**	SMD	7 x 5 x 1.25 Ceramic	SMD	9.83	100	MHz
C-13	**CX17A**	SMD	7.5 x 5.1 x 1.7 Ceramic	SMD	10	100	MHz
C-14	**CX325**	SMD	3.2 x 2.5 x 0.8 Ceramic	SMD	20	55	MHz
C-15	**CX406**	SMD	12.5 x 4.85 x 4.0 Can	SMD	3.579	75	MHz
C-16	**CX425**	SMD	4.0 x 2.5 x 0.75 Ceramic	SMD	12	32	MHz
C-17	**CX45**	SMD	5.0 x 3.2 x 0.95 Ceramic	SMD	12	45	MHz
C-18	**CX5**	SMD	7.2 x 5.2 x 1.3 Ceramic	SMD	9	150	MHz
C-19	**CX505**	SMD	12.5 x 4.85 x 5.0 Can	SMD	3.579	75	MHz
C-20	**CX506**	SMD	12.5 x 4.85 x 5.0 Can	SMD	3.579	75	MHz
C-21	**CX532**	SMD	5.0 x 3.2 x 1.3 Ceramic	SMD	10	45	MHz
C-22	**CX635A, CX635B**	SMD	6.0 x 3.5 x 1.1 Ceramic	SMD	11	150	MHz

Cardinal Components, Inc.
155 Route 46 West
Wayne, NJ 07470
Rev: C-090414-11

TEL: (973)785-1333
E-MAIL: sales@cardinalxtal.com
WEB: http://www.cardinalxtal.com

Microprocessor Crystals

Series C49

Cardinal provides the most comprehensive range of crystal components available. From standard microprocessors to custom-made crystals, Cardinal engineers and salespeople are dedicated to providing the best technical support and services possible.

Pb RoHS COMPLIANT 2002 / 95 / EC

Part Numbering Example: C49 X - A1 B2 C2 180 - 3.579545 D18 - 3

C49	X	A1*	C2	B2	180	3.579545	D18	- 3
SERIES	**ADDED FEATURES**	**OPERATING TEMP.**	**TOLERANCE**	**STABILITY**	**RESISTANCE**	**FREQUENCY**	**LOAD CAP.**	**OVERTONE**
C49	F = FORMED LEADS W = VINYL SLEEVING X = INSULATOR PAD Y = THIRD LEAD Z = TAPE AND REEL BLANK=BULK PACK	A0 = -10°C ~ +60°C A1 = -10°C ~ +70°C A2 = -40°C ~ +85°C A3 = -55°C ~ +125°C	C1 = ±100 C2 = ± 50 C3 = ± 30 C4 = ± 10	B1 = ±100 B2 = ± 50 B3 = ± 30 B4 = ± 10	SEE CHART BELOW		D16,18,20,ETC. DS = SERIES	BLANK: FUND. -3: 3rd OT -5: 5th OT -7: 7th OT -BT: BT Cut

***NOTE:** The above ABC combinations cover basic specification options. We tailor our crystal specifications to meet customer requirements. Please contact our sales department if you don't see exactly what you need.*

Specifications:

Frequency Range: 1.8432 ~ 150.000 MHz
Custom crystals available.

Operating Temperature:
-10°C ~ + 70°C *Standard*
-40°C ~ + 85°C
-55°C ~ +125°C

Frequency Stability:
± 100 ppm
± 50 ppm *Standard*
± 30 ppm
± 10 ppm

Frequency Tolerance: *(at 25°C)*
± 100 ppm
± 50 ppm *Standard*
± 30 ppm
± 10 ppm

Load Capacitance: Standard 18 pF or series.
Please specify your required load.

Resistance: Maximum resistance corresponds to frequency.
See chart below.

Standard: Mode: Fundamental, 3rd, 5th, or 7th Overtone
Shunt Capacitance: 7 pF Max
Aging: ± 5 ppm/year
Drive Level: 1.0 mW Max

Optional Features: Formed Leads
Vinyl Sleeves
Insulator Pads
Third Lead
Radial Tape and Reel (1K per Reel)

C49

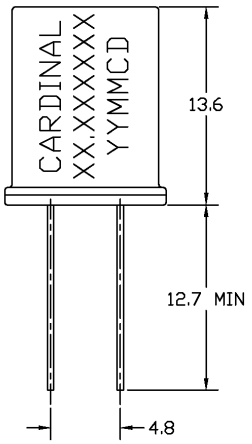

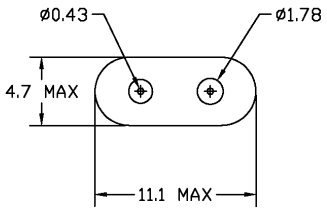

Resistance Chart: *All resistances are maximum values.*

EQUIVALENT SERIES RESISTANCE (ESR), MODE OF OPERATION (MODE), AND CUT					
Frequency MHz	**ESR(Ω)**	**Mode/cut**	**Frequency MHz**	**ESR (Ω)**	**Mode/cut**
1.8432~1.999	650 Max	Fund./AT	5.000~5.999	75 Max	Fund./AT
2.000~2.399	550 Max	Fund./AT	6.000~6.999	50 Max	Fund./AT
2.400~2.999	350 Max	Fund./AT	7.000~7.999	40 Max	Fund./AT
3.000~3.199	250 Max	Fund./AT	8.000~9.999	35 Max	Fund./AT
3.200~3.499	200 Max	Fund./AT	10.000~12.999	30 Max	Fund./AT
3.500~3.599	180 Max	Fund./AT	13.000~32.768	25 Max	Fund./AT
3.600~3.899	150 Max	Fund./AT	24.000~29.999	60 Max	3rd Overtone/AT
3.900~3.999	120 Max	Fund./AT	30.000~74.999	40 Max	3rd Overtone/AT
4.000~4.099	100 Max	Fund./AT	75.000~119.999	80 Max	5th Overtone/AT
4.100~4.999	80 Max	Fund/AT	120.000~150.000	100 Max	5th Overtone/AT

Note 1: Not all combinations of the above tolerances, stabilities, and temperature ranges are available. Consult the factory if your requirement is not standard.

Cardinal Components, Inc.
155 Route 46 West
Wayne, NJ 07470
Rev: C-090414-11

TEL: (973)785-1333
E-MAIL: sales@cardinalxtal.com
WEB: http://www.cardinalxtal.com

Low Profile Crystals

Cardinal "AT-Strip" low profile crystals come in a variety of heights and specifications to accommodate all of our customers' requirements.

Series CLP, CLP3, CLP4, CLP5, CLP6

RoHS COMPLIANT 2002 / 95 / EC

Part Numbering Example: CLP X - A1 B2 C2 200 - 3.579545 D18 - 3

CLP	X	A1*	B2	C2	200	3.579545	D18	- 3
SERIES	**ADDED FEATURES**	**OPERATING TEMP.**	**STABILITY**	**TOLERANCE**	**RESISTANCE**	**FREQUENCY**	**LOAD CAP.**	**OVERTONE**
CLP	F = FORMED LEADS	A0 = -10°C ~ +60°C	B1 = ±100	C1 = ±100	SEE CHART BELOW		D16,18,20,ETC.	BLANK: FUND.
CLP3	W = VINYL SLEEVING	A1 = -10°C ~ +70°C	B2 = ± 50	C2 = ± 50			DS = SERIES	-3: 3rd OT
CLP4	X = INSULATOR PAD	A2 = -40°C ~ +85°C	B3 = ± 30	C3 = ± 30				-5: 5th OT
CLP5	Y = THIRD LEAD	A3 = -55°C ~ +125°C	B4 = ± 10	C4 = ± 10				-7: 7th OT
CLP6	Z = TAPE AND REEL							-BT: BT Cut
	BLANK = BULK PACK							

***NOTE:** *The above ABC combinations cover basic specification options. We tailor our crystal specifications to meet customer requirements. Please contact our sales department if you don't see exactly what you need.*

Specifications:

Frequency Range:

3.579545 ~ 38.000 MHz	AT Cut Fundamental
25.000000 ~ 75.000 MHz	AT Cut 3rd Overtone
26.000000 ~ 42.000 MHz	BT Cut Fundamental

Operating Temperature: -10°C ~ +70°C *Standard*
-40°C ~ +85°C

Frequency Stability: ±100 ppm
± 50 ppm *Standard*
± 30 ppm
± 15 ppm

Frequency Tolerance: ±100 ppm
(at 25°C) ± 50 ppm *Standard*
± 30 ppm
± 10 ppm

Load Capacitance: Standard 18 pF or series.
Please specify your required load.

Resistance: Maximum resistance corresponds to frequency.
See chart below.

Standard: Mode: Fundamental or 3rd Overtone
Shunt Capacitance: 7 pF Max
Aging: ± 5 ppm/year
Drive Level: 1.0 mW Max

Optional Features: Formed Leads
Vinyl Sleeves
Insulator Pads
Radial Tape and Reel

Note 1: Not all combinations of the above tolerances, stabilities, and temperature ranges are available. Consult the factory if your requirement is not standard.
Note 2: Heights of 3.5 mm (0.138) and 2.5 mm (0.098) are also available. Please consult factory if required.

Resistance Chart: *All resistances are maximum values.*

EQUIVALENT SERIES RESISTANCE (ESR), MODE OF OPERATION (MODE), AND CUT					
Frequency MHz	**ESR(Ω)**	**Mode/cut**	**Frequency MHz**	**ESR (Ω)**	**Mode/cut**
3.579545~4.999	200 Max	Fund./AT	15.000~15.999	60 Max	Fund./AT
5.000~5.999	150 Max	Fund./AT	16.000~23.999	50 Max	Fund./AT
6.000~7.999	120 Max	Fund./AT	24.000~30.000	40 Max	Fund./AT
8.000~8.999	90 Max	Fund./AT	24.000~48.000	40 Max	Fund./BT
9.000~9.999	80 Max	Fund./AT	24.576~29.999	150 Max	3rd Overtone/AT
10.000~14.999	70 Max	Fund./AT	30.000~75.000	100 Max	3rd Overtone/AT

CLP

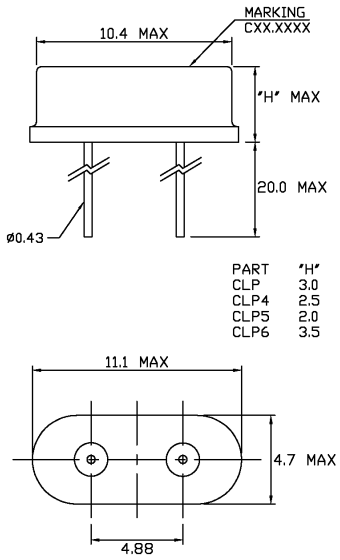

CLP3

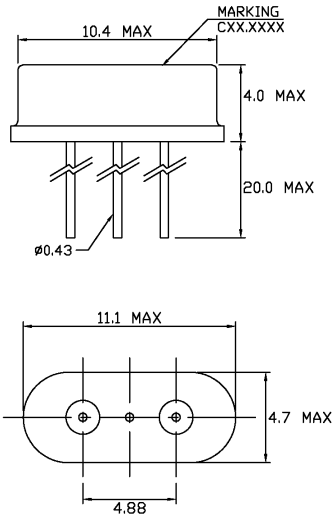

Cardinal Components, Inc.
155 Route 46 West
Wayne, NJ 07470
REV C-091404-11

TEL: (973)785-1333
E-MAIL: sales@cardinalxtal.com
WEB: http://www.cardinalxtal.com

Ultra-Miniature Crystals

Cardinal's ultra-miniature crystals are a smaller alternative to the standard HC-49 package where applications require compact board space. They are perfect for applications requiring tight tolerances over wide temperature ranges.

Series CM1 / CM5

Pb RoHS COMPLIANT 2002 / 95 / EC

Part Numbering Example: CM1 Z - A1 - B2 - C2 50 - 7.0 D18 - 3

CM1	Z	A1*	B2	C2	50	7.0	D18	- 3
SERIES	ADDED FEATURES	OPERATING TEMP.	STABILITY	TOLERANCE	RESISTANCE	FREQUENCY	LOAD CAP.	OVERTONE
CM1 CM5	BLANK = BULK PACK Z = TAPE AND REEL	A0 = -10°C ~ +60°C A1 = -10°C ~ +70°C A2 = -40°C ~ +85°C A3 = -55°C ~ +125°C	B1 = ±100 B2 = ± 50 B3 = ± 30 B4 = ± 10	C1 = ±100 C2 = ± 50 C3 = ± 30 C4 = ± 10	SEE CHART BELOW		D16,18,20,ETC. DS = SERIES	BLANK: FUND. -3: 3rd OT -5: 5th OT -7: 7th OT -BT: BT Cut

***NOTE:** The above ABC combinations cover basic specification options. We tailor our crystal specifications to meet customer requirements. Please contact our sales department if you don't see exactly what you need.*

Specifications:

Frequency Range: 10.000 ~ 175.000 MHz

Operating Temperature:
-10°C ~ + 70°C *Standard*
-40°C ~ + 85°C
-55°C ~ + 125°C

Frequency Stability:
±100 ppm
± 50 ppm *Standard*
± 30 ppm
± 10 ppm

Frequency Tolerance: *(at 25°C)*
±100 ppm
± 50 ppm *Standard*
± 30 ppm
± 10 ppm

Load Capacitance: Standard 18 pF or series.
Please specify your required load.

Resistance: Maximum resistance corresponds to frequency.
See chart below.

Standard: Mode: Fundamental, 3rd, 5th, or 7th Overtone
Shunt Capacitance: 7 pF Max
Aging: ± 5 ppm/year
Drive Level: 1.0 mW Max

Optional Features: Third lead
Insulator pads
Tape and Reel (1K per Reel)

Note 1: Not all combinations of the above tolerances, stabilities, and temperature ranges are available. Consult the factory if your requirement is not standard.

CM1

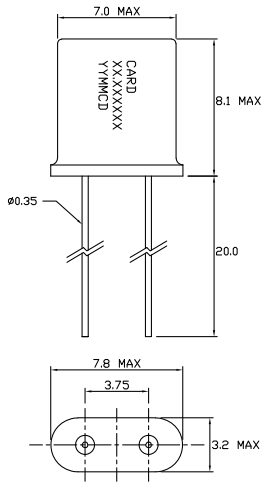

CM5

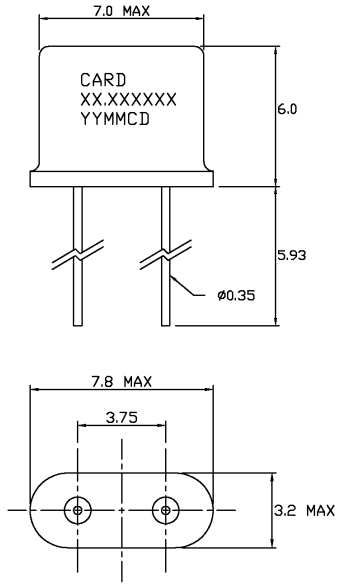

Resistance Chart: *All resistances are maximum values.*

EQUIVALENT SERIES RESISTANCE (ESR), MODE OF OPERATION (MODE), AND CUT					
CM1			CM5		
Frequency MHz	ESR(Ω)	Mode	Frequency MHz	ESR (Ω)	Mode/cut
7.000~15.999	50 Max	Fund.	10.000~15.999	60 Max	Fundamental
16.000~40.000	40 Max	Fund.	16.000~40.000	50 Max	Fundamental
30.000~90.000	70 Max	Third OT	30.000~90.000	80 Max	Third Overtone
70.000~150.000	100 Max	Fifth OT	70.000~175.000	120 Max	Fifth Overtone

Cardinal Components, Inc.
155 Route 46 West
Wayne, NJ 07470

TEL: (973)785-1333
E-MAIL: sales@cardinalxtal.com
WEB: http://www.cardinalxtal.com

Micro AT-Strip Crystals

Series CMS8

Cardinal micro crystals are small substitutes for the HC-49 package. They are perfect for applications involving tight board density.

Pb RoHS COMPLIANT 2002 / 95 / EC

Part Numbering Example: CMS8 - A1 B2 C2 150 - 3.579545 D18 - 3

CMS8		A1*	B2	C2	150	3.57945	D18	-3
SERIES	**ADDED FEATURES**	**OPERATING TEMP.**	**STABILITY**	**TOLERANCE**	**RESISTANCE**	**FREQUENCY**	**LOAD CAP.**	**OVERTONE**
CSM8	Call Marketing	A0 = -10°C ~ +60°C A1 = -10°C ~ +70°C A2 = -40°C ~ +85°C A3 = -55°C ~ +125°C	B1 = ±100 B2 = ± 50 B3 = ± 30 B4 = ± 10	C1 = ±100 C2 = ± 50 C3 = ± 30 C4 = ± 10	SEE CHART BELOW		D16,18,20,ETC. DS = SERIES	BLANK: FUND. -3: 3rd OT

***NOTE:** *The above ABC combinations cover basic specification options. We tailor our crystal specifications to meet customer requirements. Please contact our sales department if you don't see exactly what you need.*

Specifications:

Frequency Range:	3.579545 ~ 64.000 MHz	
Operating Temperature:	-10°C ~ +60°C	*Standard*
Frequency Stability:	± 100 ppm ± 50 ppm ± 30 ppm	 *Standard*
Frequency Tolerance: *(at 25°C)*	± 100 ppm ± 50 ppm ± 30 ppm	 *Standard*
Load Capacitance:	Standard 18 pF or series. Please specify your required load.	
Resistance:	Maximum resistance corresponds to frequency. See chart below.	
Standard:	Mode: Fundamental or 3rd Overtone Shunt Capacitance: 7 pF Max Aging: ± 5 ppm/year Drive Level: 1.0 mW Max	
Optional Features:	Formed Leads Vinyl Sleeves	

Note: Not all combinations of the above tolerances, stabilities, and temperature ranges are available. Consult the factory if your requirement is not standard.

CMS8

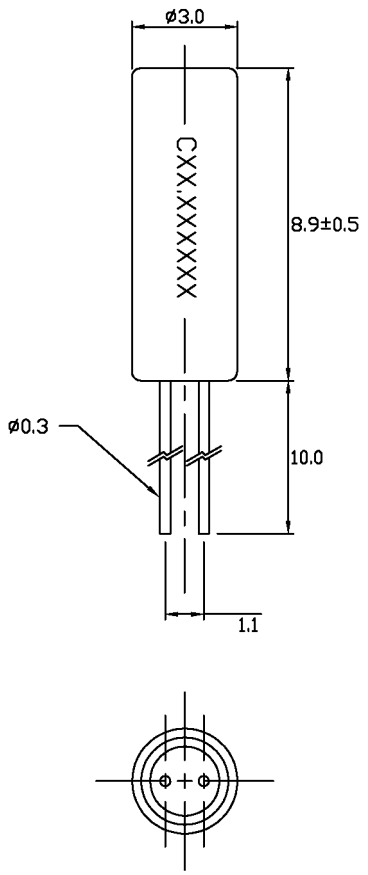

Resistance Chart: *All resistances are maximum values.*

CMS		
Frequency MHz	**Mode of Operation**	**ESR (Ω)**
3.579545 ~ 3.999999		200Ω
4.000000 ~ 4.999999		150Ω
5.000000 ~ 5.999999		120Ω
6.000000 ~ 6.999999		100Ω
7.000000 ~ 8.999999		80Ω
9.000000 ~ 12.999999		60Ω
13.000000 ~ 24.999999		50Ω
25.000000 ~ 42.000000	Fundamental	40Ω
25.000000 ~ 48.000000	Third Overtone	80Ω
48.000001 ~ 64.000000	Third Overtone	60Ω

Cardinal Components, Inc.
155 Route 46 West
Wayne, NJ 07470
Rev: C-090414-11

TEL: (973)785-1333
E-MAIL: sales@cardinalxtal.com
WEB: http://www.cardinalxtal.com

Tuning Fork Crystals

Cardinal's tuning fork crystals provide a cost-effective approach for time-management products.

Series CTF6 CTF8

Pb RoHS COMPLIANT 2002 / 95 / EC

Part Numbering Example: CTF6 - A1 B2 C3 50 - 32.768K D12.5

CTF6		A*	C3	32.768K	D12.5
SERIES	**ADDED FEATURES**	**OPERATING TEMP.**	**TOLERANCE**	**FREQUENCY**	**LOAD CAP.**
CTF6	Call Marketing	A0 = -10°C ~ +60°C	C1 = ±100		D6 = 6.0 pF
CTF8		A1 = -10°C ~ +70°C	C2 = ± 50		D12.5 = 12.5 pF
		A2 = -40°C ~ +85°C	C3 = ± 30		
		A3 = -55°C ~ +125°C	C4 = ± 10		

***NOTE:** The above ABC combinations cover basic specification options. We tailor our crystal specifications to meet customer requirements. Please contact our sales department if you don't see exactly what you need.*

Specifications:

Frequency Range:	32.768 KHz	*Standard*	
	30.000 ~ 200.000 KHz	*Available*	
Operating Temperature:	-10°C ~ +60°C	*Standard*	
Temperature Coefficient:	-(0.035 ± 0.008) ppm/°C²		BT - CUT
Frequency Tolerance: *(at 25°C)*	±30 ppm	*Standard*	
Load Capacitance:	12.5 pF, 6.0 pF		
Resistance:	50,000Ω Max	(BT Cut)	
Standard:	Shunt Capacitance: 1.7 pF Max Aging: ± 3 ppm Max first year Drive Level: 1 µW Max		
Optional Features:	Call Marketing		

CTF8

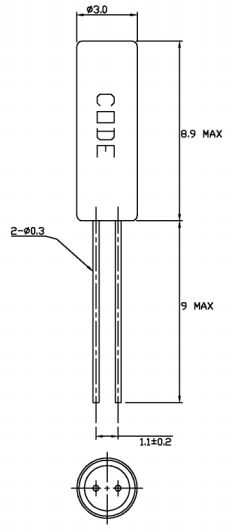

CTF6

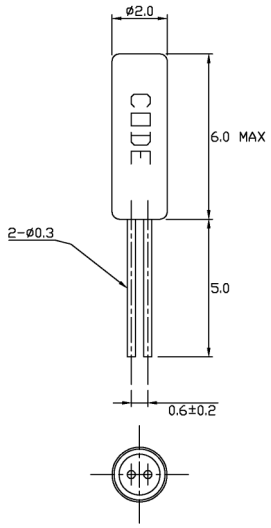

Cardinal Components, Inc.
155 Route 46 West
Wayne, NJ 07470
Rev: C-090414-11

TEL: (973)785-1333
E-MAIL: sales@cardinalxtal.com
WEB: http://www.cardinalxtal.com

Surface Mount HC-49

- *Lower ESR than AT-Strip crystals*
- *SMD profile*
- *Grounded case better for EMI*

Series C49J

Pb RoHS COMPLIANT 2002 / 95 / EC

Part Numbering Example: C49J Z - A1 B2 C2 180 - 3.579545 D18 - 3

C49J	Z	A1*	B2	C2	180	3.579545	D18	- 3
SERIES	ADDED FEATURES	OPERATING TEMP.	STABILITY	TOLERANCE	RESISTANCE	FREQUENCY	LOAD CAP.	OVERTONE
C49J	BLANK = BULK PACK Z = TAPE AND REEL	A0 = -10°C ~ +60°C A1 = -10°C ~ +70°C A2 = -40°C ~ +85°C A3 = -55°C ~ +125°C	B1 = ±100 B2 = ± 50 B3 = ± 30 B4 = ± 10	C1 = ±100 C2 = ± 50 C3 = ± 30 C4 = ± 10	SEE CHART BELOW		D16,18,20,ETC. DS = SERIES	BLANK: FUND. -3: 3rd OT -5: 5th OT -7: 7th OT -BT: BT Cut

***NOTE:** The above ABC combinations cover basic specification options. We tailor our crystal specifications to meet customer requirements. Please contact our sales department if you don't see exactly what you need.*

Specifications:

Frequency Range: 1.8432 ~ 150.000 MHz

Operating Temperature:
-10°C ~ + 70°C *Standard*
-40°C ~ + 85°C
-55°C ~ +125°C

Frequency Stability:
±100 ppm
± 50 ppm *Standard*
± 30 ppm
± 10 ppm

Frequency Tolerance: *(at 25°C)*
±100 ppm
± 50 ppm *Standard*
± 30 ppm
± 10 ppm

Load Capacitance: Standard 18 pF or series.
Please specify your required load.

Resistance: Maximum resistance corresponds to frequency.
See chart below.

Standard: Mode: Fundamental, 3rd, 5th, or 7th Overtone
Shunt Capacitance: 7 pF Max
Aging: ± 5 ppm/year
Drive Level: 1.0 mW Max

Optional Features: Vinyl Sleeves
Tape and Reel (1K per Reel)

Note: Not all combinations of the above tolerances, stabilities, and temperature ranges are available. Consult the factory if your requirement is not standard.

C49J

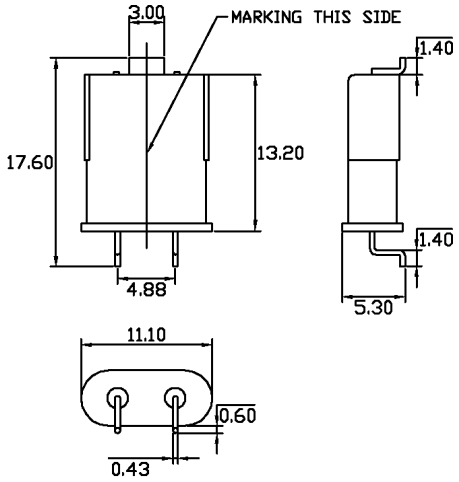

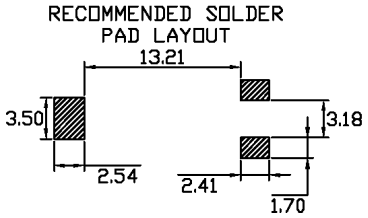

Resistance Chart: *All resistances are maximum values.*

EQUIVALENT SERIES RESISTANCE (ESR), MODE OF OPERATION (MODE), AND CUT					
Frequency MHz	ESR(Ω)	Mode/cut	Frequency MHz	ESR (Ω)	Mode/cut
1.8432~1.999	650 Max	Fund./AT	5.000~5.999	75 Max	Fund./AT
2.000~2.399	550 Max	Fund./AT	6.000~6.999	50 Max	Fund./AT
2.400~2.999	350 Max	Fund./AT	7.000~7.999	40 Max	Fund./AT
3.000~3.199	250 Max	Fund./AT	8.000~9.999	35 Max	Fund./AT
3.200~3.499	200 Max	Fund./AT	10.000~12.999	30 Max	Fund./AT
3.500~3.599	180 Max	Fund./AT	13.000~32.768	25 Max	Fund./AT
3.600~3.899	150 Max	Fund./AT	24.000~29.999	60 Max	3rd Overtone/AT
3.900~3.999	120 Max	Fund./AT	30.000~74.999	40 Max	3rd Overtone/AT
4.000~4.099	100 Max	Fund./AT	75.000~119.999	80 Max	5th Overtone/AT
4.100~4.999	80 Max	Fund/AT	120.000~150.000	100 Max	5th Overtone/AT

Cardinal Components, Inc.
155 Route 46 West
Wayne, NJ 07470
Rev: C-090414-11

TEL: (973)785-1333
E-MAIL: sales@cardinalxtal.com
WEB: http://www.cardinalxtal.com

Surface Mount UM-1

Series CM1J

- ***Smaller than C49J with the same characteristics***
- ***SMD profile***
- ***Grounded case better for EMI***

Pb RoHS COMPLIANT 2002 / 95 / EC

Part Numbering Example: CM1J - Z - A1 B2 C2 50 - 7.0 D18 - 3

CM1J	Z	A1*	B2	C2	50	7.0	D18	- 3
SERIES	ADDED FEATURES	OPERATING TEMP.	STABILITY	TOLERANCE	RESISTANCE	FREQUENCY	LOAD CAP.	OVERTONE
CM1J	BLANK = BULK PACK Z = TAPE AND REEL	A0 = -10°C ~ +60°C A1 = -10°C ~ +70°C A2 = -40°C ~ +85°C A3 = -55°C ~ +125°C	B1 = ±100 B2 = ± 50 B3 = ± 30 B4 = ± 10	C1 = ±100 C2 = ± 50 C3 = ± 30 C4 = ± 10	SEE CHART BELOW		D16,18,20,ETC. DS = SERIES	BLANK: FUND. -3: 3rd OT -5: 5th OT -7: 7th OT -BT: BT Cut

****NOTE:** The above ABC combinations cover basic specification options. We tailor our crystal specifications to meet customer requirements. Please contact our sales department if you don't see exactly what you need.*

Specifications:

Frequency Range:	10.000 ~ 175.000 MHz
Operating Temperature:	-10°C ~ + 70°C *Standard* -40°C ~ + 85°C -55°C ~ +125°C
Frequency Stability:	± 100 ppm ± 50 ppm *Standard* ± 30 ppm ± 10 ppm
Frequency Tolerance: *(at 25°C)*	± 100 ppm ± 50 ppm *Standard* ± 30 ppm ± 10 ppm
Load Capacitance:	Standard 18 pF or series. Please specify your required load.
Resistance:	Maximum resistance corresponds to frequency. See below.
Standard:	Mode: Fundamental, 3rd, 5th, or 7th Overtone Shunt Capacitance: 7 pF Max Aging: ± 5 ppm/year Drive Level: 1.0 mW Max
Optional Features:	Tape and Reel (1K per Reel)

Note: Not all combinations of the above tolerances, stabilities, and temperature ranges are available. Consult the factory if your requirement is not standard.

CM1J

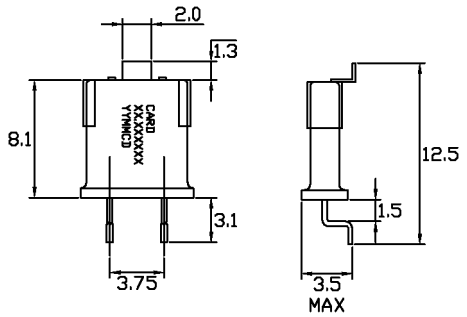

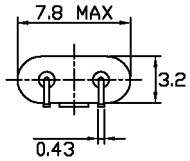

RECOMMENDED SOLDER PAD LAYOUT

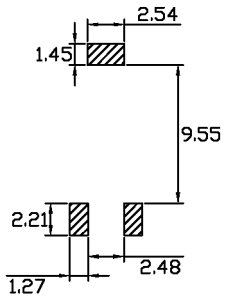

Resistance Chart: *All resistances are maximum values.*

EQUIVALENT SERIES RESISTANCE (ESR), MODE OF OPERATION (MODE)		
Frequency MHz	**Equivalent Series Resistance (Ω)**	**Oscillation Mode / Cut**
7.000~15.999	50 Max	Fundamental
16.000~40.000	40 Max	Fundamental
30.000~90.000	70 Max	Third Overtone
70.000~175.000	100 Max	Fifth Overtone

Cardinal Components, Inc.
155 Route 46 West
Wayne, NJ 07470

TEL: (973)785-1333
E-MAIL: sales@cardinalxtal.com
WEB: http://www.cardinalxtal.com

Series CP715

Pb RoHS COMPLIANT 2002 / 95 / EC

Part Number: CP715Z-A2C5-32.768KD12.5

Series: CP715
Description: SMD Plastic Watch Crystal 6.9x1.4x0.15 mm

DESCRIPTION	MIN	TYPICAL	MAX	U/M
Frequency		32.768000		KHz
Operating temperature range	-40		+85	ºC
Tolerance @ 25ºC	-20		+20	PPM
Load capacitance		12.5		pf
Resistance		65 K		ohms
Temperature Coefficient		-(0.034 ± 0.006)		PPM /ºC²
Shunt Cap			1.2	pF
Maximum aging rate	-3		3	PPM/Yr
Maximum drive level			0.001	mw
Storage temperature	-40		+85	ºC
Markings		.		
Lead Time		5 weeks		

CP715

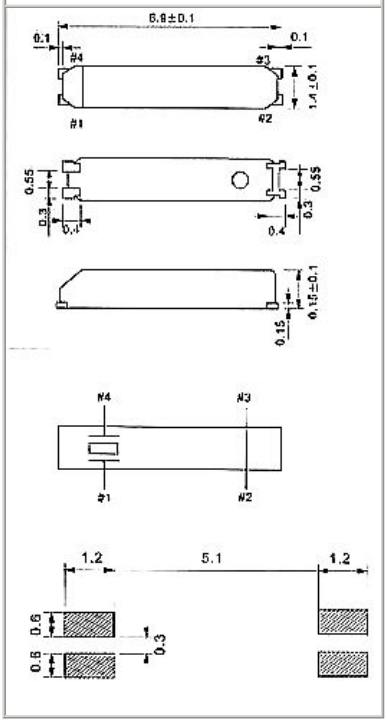

Preliminary

Plastic Tuning Fork Crystals

Cardinal's CPF crystals offer real time frequency control in a sturdy thermoplastic encasement with a 2.5 mm height.

Series **CPFB**

Pb RoHS COMPLIANT 2002 / 95 / EC

Part Numbering Example: CPFB Z - A1 C5 - 32.768K D12.5

CPFB	Z	A2*	C5	32.768	D12.5
SERIES	ADDED FEATURES	OPERATING TEMP	TOLERANCE	FREQUENCY	LOAD CAP
CPFB	BLANK = BULK PACK Z = TAPE AND REEL	A2 = -40°C ~ +85°C	C5 = ± 20		D6 = 6.0 pF D12.5 = 12.5 pF

***NOTE:** The above ABC combinations cover basic specification options. We tailor our crystal specifications to meet customer requirements. Please contact our sales department if you don't see exactly what you need.*

Specifications:

Frequency Range:	32.768 KHz	
Operating Temperature:	-40°C ~ +85°C *Standard*	
Temperature Coefficient:	-(0.035 ± 0.008) ppm/°C²	BT-CUT
Frequency Tolerance: *(at 25°C)*	± 20 ppm	
Load Capacitance:	12.5 pF *Typical*	
Shunt Capacitance:	1.35 pF *Typical*	
Resistance:	50,000Ω Max	
Drive Level:	1.0 µW Max	
Aging:	± 3.0 ppm per year	
Packaging:	Tape and Reel (3K per Reel)	

CPFB

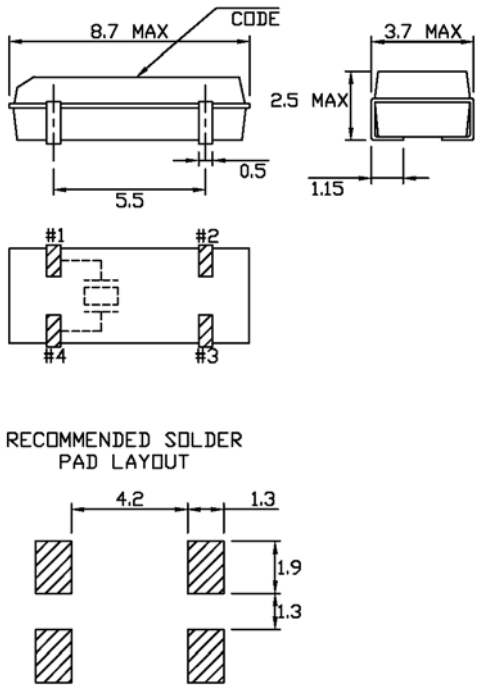

Cardinal Components, Inc.
155 Route 46 West
Wayne, NJ 07470

TEL: (973)785-1333
E-MAIL: sales@cardinalxtal.com
WEB: http://www.cardinalxtal.com

Low Profile Surface Mount Crystals

Series CSM1

Cardinal "AT-Strip" surface mount crystals are among the most readily available on the market today. Many popular frequencies are kept in stock at our facility.

Pb RoHS COMPLIANT 2002 / 95 / EC

Part Numbering Example: CSM1 Z - A1 B2 C2 200 - 3.579545 D18 - 3

CSM1	Z	A1*	B2	C2	200	3.579545	D18	- 3
SERIES	**ADDED FEATURES**	**OPERATING TEMP.**	**STABILITY**	**TOLERANCE**	**RESISTANCE**	**FREQUENCY**	**LOAD CAP.**	**OVERTONE**
CSM1	BLANK = BULK PACK Z = TAPE AND REEL	A0 = -10°C ~ +60°C A1 = -10°C ~ +70°C A2 = -40°C ~ +85°C A3 = -55°C ~ +125°C	B1 = ±100 B2 = ± 50 B3 = ± 30 B4 = ± 10	C1 = ±100 C2 = ± 50 C3 = ± 30 C4 = ± 10	SEE CHART BELOW		D16,18,20,ETC. DS = SERIES	BLANK: FUND. -3: 3rd OT -5: 5th OT -7: 7th OT -BT: BT Cut

***NOTE:** *The above ABC combinations cover basic specification options. We tailor our crystal specifications to meet customer requirements. Please contact our sales department if you don't see exactly what you need.*

Specifications:

Frequency Range:

3.579545 ~ 38.000 MHz	AT Cut Fundamental
25.000000 ~ 75.000 MHz	AT Cut 3rd Overtone
26.000000 ~ 48.000 MHz	BT Cut Fundamental

Operating Temperature: -10°C ~ +70°C *Standard*
-40°C ~ +85°C

Frequency Stability: ±100 ppm
± 50 ppm *Standard*
± 30 ppm
± 15 ppm

Frequency Tolerance: ±100 ppm
(at 25°C) ± 50 ppm *Standard*
± 30 ppm
± 10 ppm

Load Capacitance: Standard 18 pF or series.
Please specify your required load.

Resistance: Maximum resistance corresponds to frequency.
See chart below.

Standard: Mode: Fundamental or 3rd Overtone
Shunt Capacitance: 7 pF Max
Aging: ± 5 ppm/year
Drive Level: 1.0 mW Max

Optional Features: Tape and Reel (1K per Reel)

Note: Not all combinations of the above tolerances, stabilities, and temperature ranges are available. Consult the factory if your requirement is not standard.

CSM1

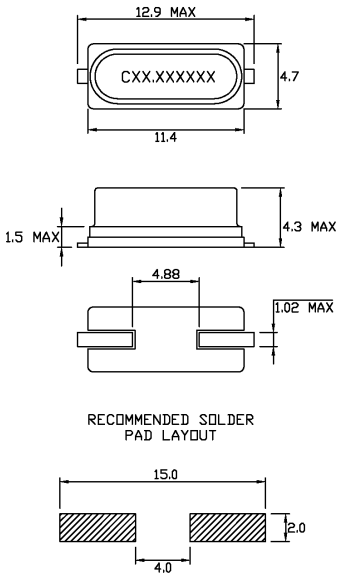

Resistance Chart: *All resistances are maximum values.*

EQUIVALENT SERIES RESISTANCE (ESR), MODE OF OPERATION (MODE), AND CUT					
Frequency MHz	**ESR(Ω)**	**Mode/cut**	**Frequency MHz**	**ESR (Ω)**	**Mode/cut**
3.579545~4.999	200 Max	Fund./AT	15.000~15.999	60 Max	Fund./AT
5.000~5.999	150 Max	Fund./AT	16.000~23.999	50 Max	Fund./AT
6.000~7.999	120 Max	Fund./AT	24.000~30.000	40 Max	Fund./AT
8.000~8.999	90 Max	Fund./AT	24.000~48.000	40 Max	Fund./BT
9.000~9.999	80 Max	Fund./AT	24.576~29.999	150 Max	3rd Overtone/AT
10.000~14.999	70 Max	Fund./AT	30.000~75.000	100 Max	3rd Overtone/AT

Cardinal Components, Inc.
155 Route 46 West
Wayne, NJ 07470
Rev: C-090414-11

TEL: (973)785-1333
E-MAIL: sales@cardinalxtal.com
WEB: http://www.cardinalxtal.com

Low Profile Surface Mount Crystals

- *3.0 mm Maximum SMD profile*
- *Very cost competitive*
- *Fast delivery*

Series CSM4 CSM5

Pb RoHS COMPLIANT 2002 / 95 / EC

Part Numbering Example: CSM4 Z - A1 B2 C2 200 - 3.579545 D18 - 3

CSM4	Z	A1*	B2	C2	200	3.579545	D18	- 3
SERIES	**ADDED FEATURES**	**OPERATING TEMP.**	**STABILITY**	**TOLERANCE**	**RESISTANCE**	**FREQUENCY**	**LOAD CAP.**	**OVERTONE**
CSM4 CSM5	BLANK = BULK PACK Z = TAPE AND REEL	A0 = -10°C ~ +60°C A1 = -10°C ~ +70°C A2 = -40°C ~ +85°C A3 = -55°C ~ +125°C	B1 = ±100 B2 = ± 50 B3 = ± 30 B4 = ± 10	C1 = ±100 C2 = ± 50 C3 = ± 30 C4 = ± 10	SEE CHART BELOW		D16,18,20,ETC. DS = SERIES	BLANK: FUND. -3: 3rd OT -5: 5th OT -7: 7th OT -BT: BT Cut

***NOTE:** *The above ABC combinations cover basic specification options. We tailor our crystal specifications to meet customer requirements. Please contact our sales department if you don't see exactly what you need.*

Specifications:

Frequency Range:

3.579545 ~ 38.000 MHz	AT Cut Fundamental	
25.000000 ~ 75.000 MHz	AT Cut 3rd Overtone	
26.000000 ~ 48.000 MHz	BT Cut Fundamental	

Operating Temperature:	-10°C ~ +70°C	*Standard*
	-40°C ~ +85°C	
Frequency Stability:	±100 ppm	
	± 50 ppm	*Standard*
	± 30 ppm	
	± 15 ppm	
Frequency Tolerance:	±100 ppm	
(at 25°C)	±50 ppm	*Standard*
	±30 ppm	
	±10 ppm	
Load Capacitance:	Standard 18 pF or series. Please specify your required load.	
Resistance:	Maximum resistance corresponds to frequency. See chart below.	
Standard:	Mode: Fundamental or 3rd Overtone Shunt Capacitance: 7 pF Max Aging: ± 5 ppm/year Drive Level: 1.0 mW Max	
Optional Features:	Tape and Reel (1K per Reel)	

Note: Not all combinations of the above tolerances, stabilities, and temperature ranges are available. Consult the factory if your requirement is not standard.

Resistance Chart: *All resistances are maximum*

EQUIVALENT SERIES RESISTANCE (ESR), MODE OF OPERATION (MODE), AND CUT					
Frequency MHz	**ESR(Ω)**	**Mode/cut**	**Frequency MHz**	**ESR (Ω)**	**Mode/cut**
3.579545~4.999	200 Max	Fund./AT	15.000~15.999	60 Max	Fund./AT
5.000~5.999	150 Max	Fund./AT	16.000~23.999	50 Max	Fund./AT
6.000~7.999	120 Max	Fund./AT	24.000~30.000	40 Max	Fund./AT
8.000~8.999	90 Max	Fund./AT	24.000~48.000	40 Max	Fund./BT
9.000~9.999	80 Max	Fund./AT	24.576~29.999	150 Max	3rd Overtone/AT
10.000~14.999	70 Max	Fund./AT	30.000~75.000	100 Max	3rd Overtone/AT

CSM4

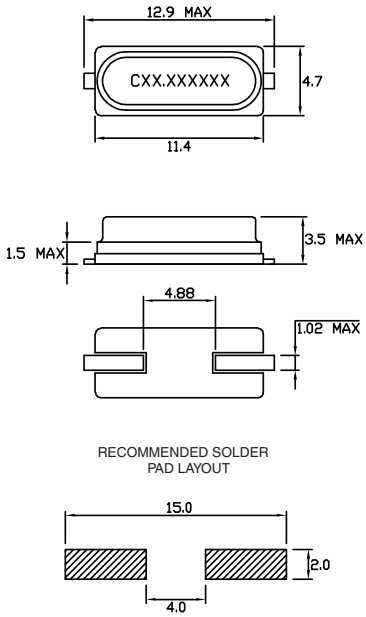

CSM5

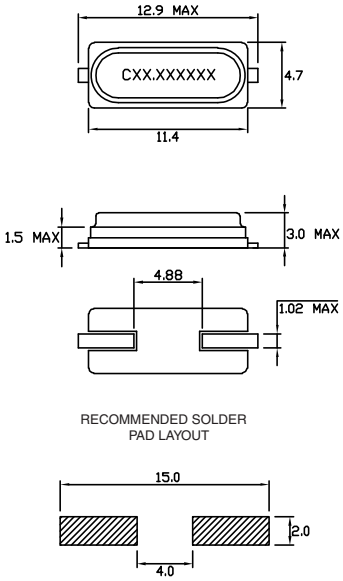

Cardinal Components, Inc.
155 Route 46 West
Wayne, NJ 07470
Rev: C-090414-11

TEL: (973)785-1333
E-MAIL: sales@cardinalxtal.com
WEB: http://www.cardinalxtal.com

Ceramic Surface Mount

- *1.25 mm height*
- *Glass-sealed housing for high reliability*

Two industry standard footprints
- *Economic cost*

Series CX12A CX12B

RoHS COMPLIANT 2002 / 95 / EC

Part Numbering Example: CX12A Z - A1 B2 C2 60 - 9.83 D18 - 3

CX12A	Z	A1*	B2	C2	60	9.83	D18	- 3
SERIES	ADDED FEATURES	OPERATING TEMP.	STABILITY	TOLERANCE	RESISTANCE	FREQUENCY	LOAD CAP.	OVERTONE
CX12A	BLANK = BULK PACK Z = TAPE AND REEL	A0 = -10°C ~ +60°C A1 = -10°C ~ +70°C A2 = -40°C ~ +85°C A3 = -55°C ~ +125°C	B1 = ±100 B2 = ± 50 B3 = ± 30 B4 = ± 10	C1 = ±100 C2 = ± 50 C3 = ± 30 C4 = ± 10	SEE CHART BELOW		D16,18,20,ETC. DS = SERIES	BLANK: FUND. -3: 3rd OT -5: 5th OT -7: 7th OT -BT: BT Cut

***NOTE:** *The above ABC combinations cover basic specification options. We tailor our crystal specifications to meet customer requirements. Please contact our sales department if you don't see exactly what you need.*

Specifications:

Frequency Range: 9.83 ~ 100.000 MHz

Operating Temperature: -10°C ~ +60°C *Standard*
-40°C ~ +85°C

Frequency Stability: ±100 ppm *Standard*
± 50 ppm

Frequency Tolerance: ± 50 ppm *Standard*
(at 25°C)

Load Capacitance: Standard 18 pF or series.
Other values are available.

Resistance: Maximum resistance corresponds to frequency.
See chart below.

Standard: Mode: Fundamental or 3rd Overtone
Shunt Capacitance: 5 pF Max
Aging: ± 5 ppm/year
Drive Level: 0.1 mW
Packaging: Tape and Reel (1K per Reel)

CX12A

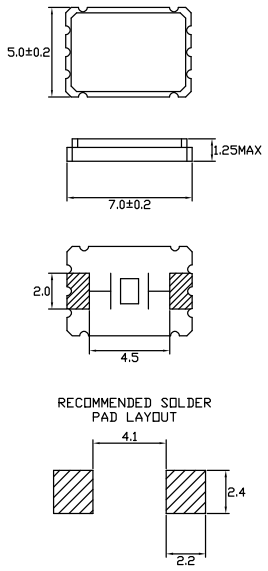

CX12B

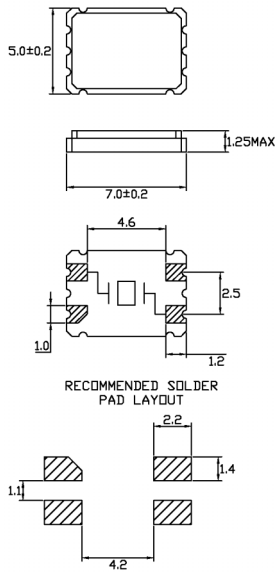

Resistance Chart: *All resistances are maximum values.*

EQUIVALENT SERIES RESISTANCE (ESR), MODE OF OPERATION (MODE), AND CUT					
Frequency MHz	ESR(Ω)	Mode/cut	Frequency MHz	ESR (Ω)	Mode/cut
9.83~11.999	60 Max	Fund./AT	28.000~30.999	100 Max	3rd Overtone/AT
12.000~15.999	60 Max	Fund./AT	31.000~34.999	100 Max	3rd Overtone/AT
16.000~25.999	40 Max	Fund./AT	35.000~49.999	60 Max	3rd Overtone/AT
26.000~41.000	40 Max	Fund./AT	50.000~100.000	60 Max	3rd Overtone/AT

Cardinal Components, Inc.
155 Route 46 West
Wayne, NJ 07470
Rev: C-090414-11

TEL: (973)785-1333
E-MAIL: sales@cardinalxtal.com
WEB: http://www.cardinalxtal.com

Ceramic Surface Mount Crystals

Series CX17A

The Cardinal CX17A is epoxy sealed ceramic crystals. The *advantages of short height (1.7 mm max), two different terminal patterns, and lower cost are combined in this popular Cardinal SMD crystal.*

Pb RoHS COMPLIANT 2002 / 95 / EC

Part Numbering Example: CX17A Z - A1 B2 C2 60 - 10.0 D18 - 3

CX17A	Z	A1*	B2	C2	60	10.0	D18	- 3
SERIES	**ADDED FEATURES**	**OPERATING TEMP.**	**STABILITY**	**TOLERANCE**	**RESISTANCE**	**FREQUENCY**	**LOAD CAP.**	**OVERTONE**
CX17A	BLANK = BULK PACK Z = TAPE AND REEL	A0 = -10°C ~ +60°C A1 = -10°C ~ +70°C A2 = -40°C ~ +85°C A3 = -55°C ~ +125°C	B1 = ±100 B2 = ± 50 B3 = ± 30 B4 = ± 10	C1 = ±100 C2 = ± 50 C3 = ± 30 C4 = ± 10	SEE CHART BELOW		D16,18,20,ETC. DS = SERIES	BLANK: FUND. -3: 3rd OT -5: 5th OT -7: 7th OT -BT: BT Cut

***NOTE:** *The above ABC combinations cover basic specification options. We tailor our crystal specifications to meet customer requirements. Please contact our sales department if you don't see exactly what you need.*

Specifications:

Frequency Range: 10.000 ~ 100.000 MHz

Operating Temperature: -10°C ~ +60°C *Standard*
-40°C ~ +85°C

Frequency Stability: ±100 ppm *Standard*
± 50 ppm

Frequency Tolerance: ± 50 ppm *Standard*
(at 25°C)

Load Capacitance: Standard 16 pF or series.
Other values are available.

Resistance: Maximum resistance corresponds to frequency.
See chart below.

Standard: Mode: Fundamental, 3rd, or 5th Overtone
Shunt Capacitance: 7 pF Max
Aging: ± 5 ppm/year
Drive Level: 100 µW
Packaging: Tape and Reel (1K per Reel)

CX17A

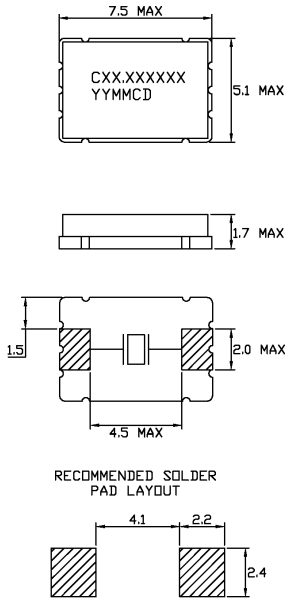

Resistance Chart: *All resistances are maximum values.*

EQUIVALENT SERIES RESISTANCE (ESR), MODE OF OPERATION (MODE), AND CUT					
Frequency MHz	**ESR(Ω)**	**Mode/cut**	**Frequency MHz**	**ESR (Ω)**	**Mode/cut**
9.500~10.999	60 Max	Fund./AT	35.000~39.999	100 Max	3rd Overtone/AT
11.000~13.999	50 Max	Fund./AT	40.000~49.999	80 Max	3rd Overtone/AT
14.000~15.999	40 Max	Fund./AT	50.000~89.999	50 Max	3rd Overtone/AT
16.000~40.000	30 Max	Fund./AT	90.000~100.000	100 Max	5th Overtone/AT

Cardinal Components, Inc.
155 Route 46 West
Wayne, NJ 07470

TEL: (973)785-1333
E-MAIL: sales@cardinalxtal.com
WEB: http://www.cardinalxtal.com

Ceramic Surface Mount Crystal

Series CX325

- ***Smallest package dimensions available***
- ***Wide fundamental mode***
- ***Very low drive level***

Pb RoHS COMPLIANT 2002 / 95 / EC

Part Numbering Example: CX325 - Z - A1 B2 C2 100 - 20.0 D18

CX325	Z	A1*	B2	C2	100	20.0	D18
SERIES	**ADDED FEATURES**	**OPERATING TEMP.**	**STABILITY**	**TOLERANCE**	**RESISTANCE**	**FREQUENCY**	**LOAD CAP.**
CX325	BLANK = BULK PACK Z = TAPE AND REEL	A0 = -10°C ~ +60°C A1 = -10°C ~ +70°C A2 = -40°C ~ +85°C A3 = -55°C ~ +125°C	B1 = ±100 B2 = ± 50 B3 = ± 30 B4 = ± 10 B9 = ± 20	C1 = ±100 C2 = ± 50 C3 = ± 30 C4 = ± 10	SEE CHART BELOW		D16,18,20,ETC. DS = SERIES

***NOTE:** The above ABC combinations cover basic specification options. We tailor our crystal specifications to meet customer requirements. Please contact our sales department if you don't see exactly what you need.*

Specifications:

Frequency Range:	20.000 ~ 55.000 MHz	*(Fundamental)*
Operating Temperature:	-10°C ~ +60°C	
Frequency Stability:	± 30 ppm ± 50 ppm ± 100 ppm	 *Standard*
Frequency Tolerance: *(at 25°C)*	± 30 ppm ± 50 ppm ± 100 ppm	 *Standard*
Load Capacitance:	16 pF or series Other values are available	
Standard:	Mode: Fundamental Shunt Capacitance: 7 pF Max Aging: ± 5 ppm/year Drive Level: 10 µW (100 µW Max) Packaging: Tape and Reel	

CX325

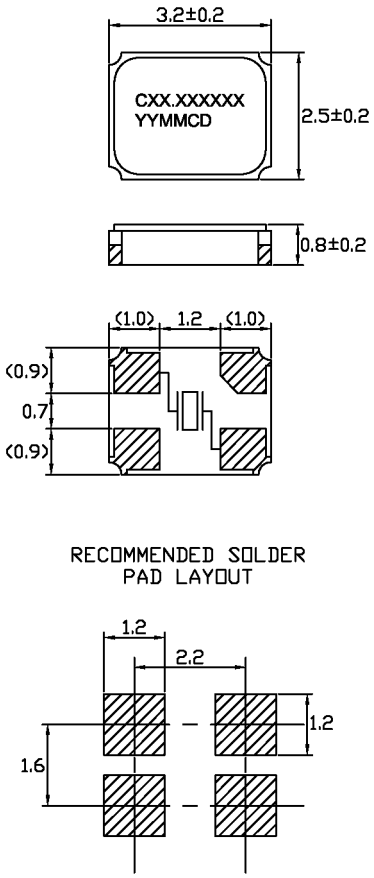

Resistance Chart: *All resistances are maximum*

EQUIVALENT SERIES RESISTANCE (ESR), MODE OF OPERATION (MODE)		
Frequency MHz	**ESR (Ω)**	**Oscillation Mode**
20.0 ~ 29.999	100	Fundamental
30.0 ~ 55.999	50	Fundamental

Cardinal Components, Inc.
155 Route 46 West
Wayne, NJ 07470
Rev: C-090414-11

TEL: (973)785-1333
E-MAIL: sales@cardinalxtal.com
WEB: http://www.cardinalxtal.com

Surface Mount Crystal

Fits Epson MA406 footprint.

Series CX406

Pb RoHS COMPLIANT 2002 / 95 / EC

Part Numbering Example: CX406 Z - A1 B2 C2 200 - 3.579545 D18 - 3

CX406	Z	A1*	B2	C2	200	3.579545	D18	- 3
SERIES	**ADDED FEATURES**	**OPERATING TEMP.**	**STABILITY**	**TOLERANCE**	**RESISTANCE**	**FREQUENCY**	**LOAD CAP.**	**OVERTONE**
CX406	BLANK = BULK PACK Z = TAPE AND REEL	A0 = -10°C ~ +60°C A1 = -10°C ~ +70°C A2 = -40°C ~ +85°C A3 = -55°C ~ +125°C	B1 = ±100 B2 = ± 50 B3 = ± 30 B4 = ± 10	C1 = ±100 C2 = ± 50 C3 = ± 30 C4 = ± 10	SEE CHART BELOW		D16,18,20,ETC. DS = SERIES	BLANK: FUND. -3: 3rd OT -5: 5th OT -7: 7th OT -BT: BT Cut

NOTE: *The above ABC combinations cover basic specification options. We tailor our crystal specifications to meet customer requirements. Please contact our sales department if you don't see exactly what you need.*

Specifications:

Frequency Range:

3.579545 ~ 38.000 MHz	AT Cut Fundamental	
25.000000 ~ 75.000 MHz	AT Cut 3rd Overtone	
26.000000 ~ 42.000 MHz	BT Cut Fundamental	

Operating Temperature: -10°C ~ +70°C *Standard*
-40°C ~ +85°C

Frequency Stability: ±100 ppm
± 50 ppm *Standard*
± 30 ppm
± 15 ppm

Frequency Tolerance: ±100 ppm
(at 25°C) ± 50 ppm *Standard*
± 30 ppm
± 10 ppm

Load Capacitance: Standard 18 pF or series.
Please specify your required load.

Resistance: Maximum resistance corresponds to frequency.
See chart below.

Standard: Mode: Fundamental or 3rd Overtone
Shunt Capacitance: 7 pF Max
Aging: ± 5 ppm/year
Drive Level: 1.0 mW Max

Optional Features: Tape and Reel (1K per Reel)

Note: Not all combinations of the above tolerances, stabilities, and temperature ranges are available. Consult the factory if your requirement is not standard.

CX406

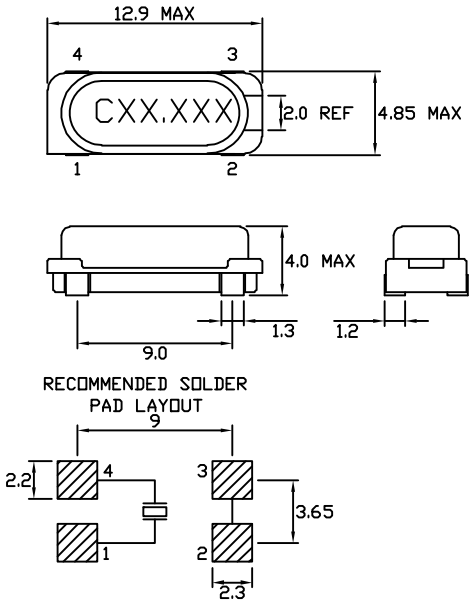

Resistance Chart: *All resistances are maximum values.*

EQUIVALENT SERIES RESISTANCE (ESR), MODE OF OPERATION (MODE), AND CUT					
Frequency MHz	**ESR(Ω)**	**Mode/cut**	**Frequency MHz**	**ESR (Ω)**	**Mode/cut**
3.579545~4.999	200 Max	Fund./AT	15.000~15.999	60 Max	Fund./AT
5.000~5.999	150 Max	Fund./AT	16.000~23.999	50 Max	Fund./AT
6.000~7.999	120 Max	Fund./AT	24.000~30.000	40 Max	Fund./AT
8.000~8.999	90 Max	Fund./AT	24.000~48.000	40 Max	Fund./BT
9.000~9.999	80 Max	Fund./AT	24.576~29.999	150 Max	3rd Overtone/AT
10.000~14.999	70 Max	Fund./AT	30.000~75.000	100 Max	3rd Overtone/AT

Cardinal Components, Inc.
155 Route 46 West
Wayne, NJ 07470
Rev: C-090414-11

TEL: (973)785-1333
E-MAIL: sales@cardinalxtal.com
WEB: http://www.cardinalxtal.com

Ceramic Surface Mount Crystal

- ***Small overall package dimensions***

Series CX425

Pb RoHS COMPLIANT 2002 / 95 / EC

Part Numbering Example: CX425 Z - A5 B3 C3 - 80 - 12.0 D10

CX425	Z	A5*	B3	C3	80	12.0	D10
SERIES	**ADDED FEATURES**	**OPERATING TEMP.**	**STABILITY**	**TOLERANCE**	**RESISTANCE**	**FREQUENCY**	**LOAD CAP.**
CX425	BLANK = BULK PACK Z = TAPE AND REEL	A5 = -20°C ~ +70°C	B3 = ± 30 B6 = ± 15 B4 = ± 10	C3 = ± 30 C8 = ± 15 C4 = ± 10	SEE CHART BELOW		D8, D10, ETC.

***NOTE:** *The above ABC combinations cover basic specification options. We tailor our crystal specifications to meet customer requirements. Please contact our sales department if you don't see exactly what you need.*

Specifications:

Frequency Range:	12.000 ~ 32.000 MHz *(Fundamental)*
Operating Temperature:	-20°C ~ +70°C
Frequency Stability:	± 30 ppm ± 15 ppm ± 10 ppm
Frequency Tolerance: *(at 25°C)*	± 30 ppm ± 15 ppm ± 10 ppm
Load Capacitance:	Standard 8 pF,10 pF, etc. Other values are available.
Resistance:	Maximum resistance corresponds to frequency. See chart below.
Standard:	Shunt Capacitance: 7 pF Max Aging: ± 5 ppm/year Drive Level: 100 µW Max
Option:	Packaging: Tape and Reel

CX425

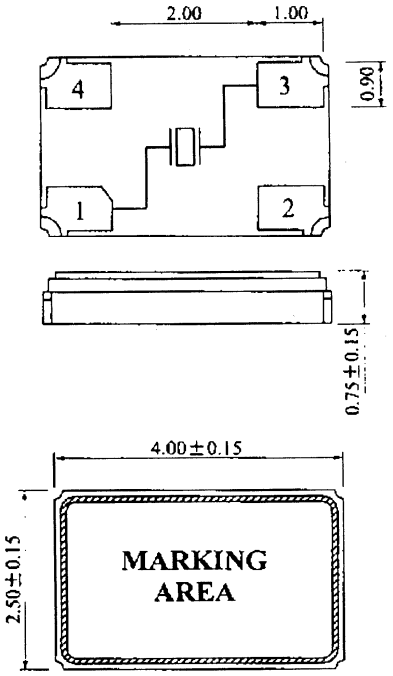

Recommended Solder Pattern

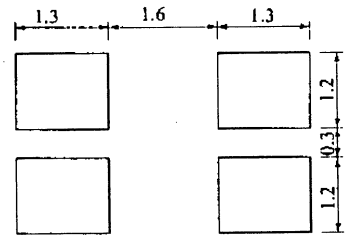

Resistance Chart: *All resistances are maximum*

EQUIVALENT SERIES RESISTANCE (ESR), MODE OF OPERATION (MODE)		
Frequency MHz	**ESR (Ω)**	**Oscillation Mode**
12.0 ~ 19.999	80	Fundamental
20.0 ~ 25.999	70	Fundamental
26.0 ~ 32.000	50	Fundamental

Cardinal Components, Inc.
155 Route 46 West
Wayne, NJ 07470
Rev: C-090414-11

TEL: (973)785-1333
E-MAIL: sales@cardinalxtal.com
WEB: http://www.cardinalxtal.com

Ultra Miniature Surface Mount Crystals

Series CX45

- *Very low height*
- *Very low drive level*
- *Small size excellent for next generation products*

Pb RoHS COMPLIANT 2002 / 95 / EC

Part Numbering Example: CX45 - Z - A1 B2 C2 100 - 10.0 D18 - 3

CX45	Z	A1*	B2	C2	100	10.0	D18	- 3
SERIES	**ADDED FEATURES**	**OPERATING TEMP.**	**STABILITY**	**TOLERANCE**	**RESISTANCE**	**FREQUENCY**	**LOAD CAP.**	**OVERTONE**
CX45	BLANK = BULK PACK Z = TAPE AND REEL	A0 = -10°C ~ +60°C A1 = -10°C ~ +70°C A2 = -40°C ~ +85°C A3 = -55°C ~ +125°C	B1 = ±100 B2 = ± 50 B3 = ± 30 B4 = ± 10	C1 = ±100 C2 = ± 50 C3 = ± 30 C4 = ± 10	SEE CHART BELOW		D16,18,20,ETC. DS = SERIES	BLANK: FUND. -3: 3rd OT -5: 5th OT -7: 7th OT -BT: BT Cut

***NOTE:** The above ABC combinations cover basic specification options. We tailor our crystal specifications to meet customer requirements. Please contact our sales department if you don't see exactly what you need.*

Specifications:

Frequency Range: 12.000~45.000 MHz
AT-Cut Fundamental

Operating Temperature: -0°C ~ +60°C *Standard*
-40°C ~ +85°C

Frequency Stability: ±100 ppm AT-Cut
± 50 ppm *Standard*
± 30 ppm
± 10 ppm

Frequency Tolerance: ± 50 ppm *Standard*
(at 25°C)

Load Capacitance: Please specify your required load.

Resistance: See chart below.

Standard: Shunt Capacitance: 7 pF Max
Aging: ± 5 ppm/year
Drive Level: 100 µW Max
Packaging: Tape and Reel

CX45

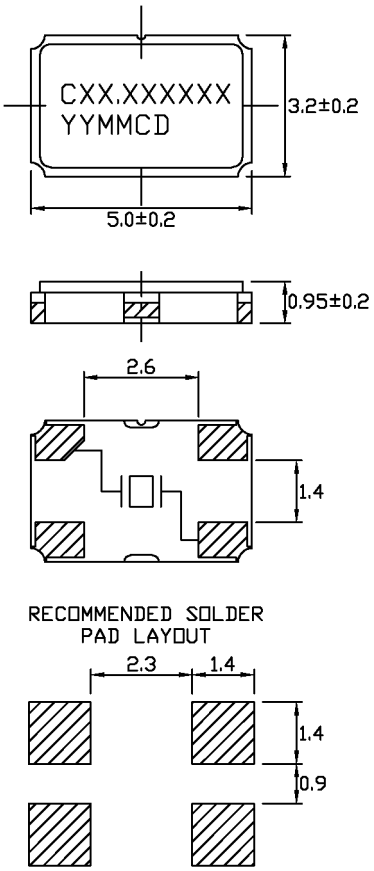

Resistance Chart: *All resistances are maximum*

EQUIVALENT SERIES RESISTANCE (ESR), MODE OF OPERATION (MODE)		
Frequency MHz	**ESR (Ω)**	**Oscillation Mode**
10.0 ~ 11.999	100	Fundamental
12.0 ~ 15.999	60	Fundamental
16.0 ~ 29.999	50	Fundamental
30.0 ~ 45.000	40	Fundamental

Cardinal Components, Inc.
155 Route 46 West
Wayne, NJ 07470
Rev: C-090414-11

TEL: (973)785-1333
E-MAIL: sales@cardinalxtal.com
WEB: http://www.cardinalxtal.com

Ceramic Surface Mount

Series CX5

- ***Lowest maximum drive level available***
- ***Widest frequency range***
- ***Very tight stabilities***

Pb RoHS COMPLIANT 2002 / 95 / EC

Part Numbering Example: CX5 Z - A1 - B2 - C2 60 - 10.0 D18 - 3

CX5	Z	A1*	B2	C2	60	10.0	D18	- 3
SERIES	**ADDED FEATURES**	**OPERATING TEMP.**	**STABILITY**	**TOLERANCE**	**RESISTANCE**	**FREQUENCY**	**LOAD CAP.**	**OVERTONE**
CX5	BLANK = BULK PACK Z = TAPE AND REEL	A0 = -10°C ~ +60°C A1 = -10°C ~ +70°C A2 = -40°C ~ +85°C A3 = -55°C ~ +125°C	B1 = ±100 B2 = ± 50 B3 = ± 30 B4 = ± 10	C1 = ±100 C2 = ± 50 C3 = ± 30 C4 = ± 10	SEE CHART BELOW		D16,18,20,ETC. DS = SERIES	BLANK: FUND. -3: 3rd OT -5: 5th OT -7: 7th OT -BT: BT Cut

***NOTE:** *The above ABC combinations cover basic specification options. We tailor our crystal specifications to meet customer requirements. Please contact our sales department if you don't see exactly what you need.*

Specifications:

CX5

Frequency Range:

9.000 ~ 40.320 MHz	AT-Cut Fundamental	
40.000 ~ 90.000 MHz	3rd Overtone	
90.000 ~ 150.000 MHz	5th Overtone	

Operating Temperature: 0°C ~ +70°C *Standard*
-40°C ~ +85°C

Frequency Stability: ± 50 ppm *Standard*
Stabilities from ± 5 ppm available.

Frequency Tolerance: ± 50 ppm *Standard*
(at 25°C) Tolerances from ± 10 ppm available.

Load Capacitance: Parallel or series.
Please specify your required load.

Resistance: Maximum resistance corresponds to frequency.
See chart below.

Standard: Shunt Capacitance: 7 pF Max
Aging: ± 3 ppm first year
Drive Level: 50 µW Max
Packaging: Tape and Reel (1K per Reel)

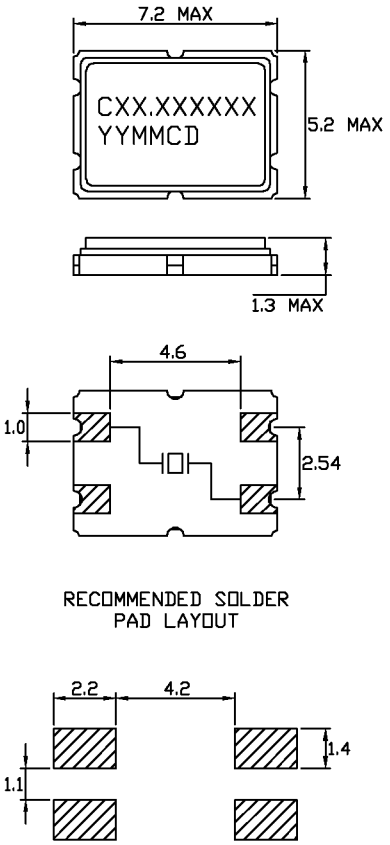

Resistance Chart: *All resistances are maximum*

EQUIVALENT SERIES RESISTANCE (ESR), MODE OF OPERATION (MODE), AND CUT

Frequency MHz	ESR(Ω)	Mode/cut	Frequency MHz	ESR (Ω)	Mode/cut
9.500~10.999	60 Max	Fund./AT	40.000~49.999	80 Max	3rd Overtone/AT
11.000~13.999	50 Max	Fund./AT	50.000~89.999	50 Max	3rd Overtone/AT
14.000~15.999	40 Max	Fund./AT	90.000~150.000	100 Max	5th Overtone/AT
16.000~39.999	30 Max	Fund./AT			

Cardinal Components, Inc.
155 Route 46 West
Wayne, NJ 07470
Rev: C-090414-11

TEL: (973)785-1333
E-MAIL: sales@cardinalxtal.com
WEB: http://www.cardinalxtal.com

Surface Mount Crystal

Fits Epson MA505 footprint.

Series CX505

Pb RoHS COMPLIANT 2002 / 95 / EC

Part Numbering Example: CX505 Z - A1 B2 C3 200 - 3.579545 D18 - 3

CX505	Z	A1*	B2	C2	200	3.579545	D18	- 3
SERIES	**ADDED FEATURES**	**OPERATING TEMP.**	**STABILITY**	**TOLERANCE**	**RESISTANCE**	**FREQUENCY**	**LOAD CAP.**	**OVERTONE**
CX505	BLANK = BULK PACK Z = TAPE AND REEL	A0 = -10°C ~ +60°C A1 = -10°C ~ +70°C A2 = -40°C ~ +85°C A3 = -55°C ~ +125°C	B1 = ±100 B2 = ± 50 B3 = ± 30 B4 = ± 10	C1 = ±100 C2 = ± 50 C3 = ± 30 C4 = ± 10	SEE CHART BELOW		D16,18,20,ETC. DS = SERIES	BLANK: FUND. -3: 3rd OT -5: 5th OT -7: 7th OT -BT: BT Cut

***NOTE:** *The above ABC combinations cover basic specification options. We tailor our crystal specifications to meet customer requirements. Please contact our sales department if you don't see exactly what you need.*

Specifications:

Frequency Range:

3.579545 ~ 38.000 MHz	AT Cut Fundamental	
25.000000 ~ 75.000 MHz	AT Cut 3rd Overtone	
26.000000 ~ 42.000 MHz	BT Cut Fundamental	

Operating Temperature: -10°C ~ +70°C *Standard*
-40°C ~ +85°C

Frequency Stability: ±100 ppm
± 50 ppm *Standard*
± 30 ppm
± 15 ppm

Frequency Tolerance: ±100 ppm
(at 25°C) ± 50 ppm *Standard*
± 30 ppm
± 10 ppm

Load Capacitance: Standard 18 pF or series.
Please specify your required load.

Resistance: Maximum resistance corresponds to frequency.
See chart below.

Standard: Mode: Fundamental or 3rd Overtone
Shunt Capacitance: 7 pF Max
Aging: ± 5 ppm/year
Drive Level: 1.0 mW Max

Optional Features: Tape and Reel (1K per Reel)

Note: Not all combinations of the above tolerances, stabilities, and temperature ranges are available. Consult the factory if your requirement is not standard.

CX505

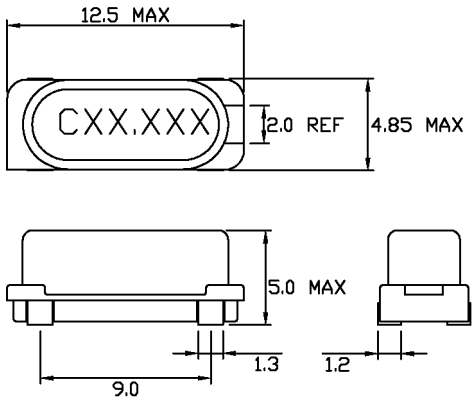

RECOMMENDED SOLDER PAD LAYOUT

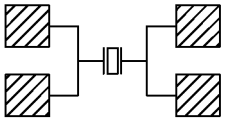

Resistance Chart: *All resistances are maximum values.*

EQUIVALENT SERIES RESISTANCE (ESR), MODE OF OPERATION (MODE), AND CUT					
Frequency MHz	**ESR(Ω)**	**Mode/cut**	**Frequency MHz**	**ESR (Ω)**	**Mode/cut**
3.579545~4.999	200 Max	Fund./AT	15.000~15.999	60 Max	Fund./AT
5.000~5.999	150 Max	Fund./AT	16.000~23.999	50 Max	Fund./AT
6.000~7.999	120 Max	Fund./AT	24.000~30.000	40 Max	Fund./AT
8.000~8.999	90 Max	Fund./AT	24.000~48.000	40 Max	Fund./BT
9.000~9.999	80 Max	Fund./AT	24.576~29.999	150 Max	3rd Overtone/AT
10.000~14.999	70 Max	Fund./AT	30.000~75.000	100 Max	3rd Overtone/AT

Cardinal Components, Inc.
155 Route 46 West
Wayne, NJ 07470
Rev: C-090414-11

TEL: (973)785-1333
E-MAIL: sales@cardinalxtal.com
WEB: http://www.cardinalxtal.com

Surface Mount Crystal

Fits Epson MA506 footprint.

Series CX506

Pb

RoHS COMPLIANT 2002 / 95 / EC

Part Numbering Example: CX506 Z - A1 B2 C2 200 - 3.579545 D18 - 3

CX506	Z	A1*	B2	C2	200	3.579545	D18	- 3
SERIES	**ADDED FEATURES**	**OPERATING TEMP.**	**STABILITY**	**TOLERANCE**	**RESISTANCE**	**FREQUENCY**	**LOAD CAP.**	**OVERTONE**
CX506	BLANK = BULK PACK Z = TAPE AND REEL	A0 = -10°C ~ +60°C A1 = -10°C ~ +70°C A2 = -40°C ~ +85°C A3 = -55°C ~ +125°C	B1 = ±100 B2 = ± 50 B3 = ± 30 B4 = ± 10	C1 = ±100 C2 = ± 50 C3 = ± 30 C4 = ± 10	SEE CHART BELOW		D16,18,20,ETC. DS = SERIES	BLANK: FUND. -3: 3rd OT -5: 5th OT -7: 7th OT -BT: BT Cut

****NOTE:*** *The above ABC combinations cover basic specification options. We tailor our crystal specifications to meet customer requirements. Please contact our sales department if you don't see exactly what you need.*

Specifications:

Frequency Range:

3.579545 ~ 38.000 MHz	AT Cut Fundamental	
25.000000 ~ 75.000 MHz	AT Cut 3rd Overtone	
26.000000 ~ 42.000 MHz	BT Cut Fundamental	

Operating Temperature:	-10°C ~ +70°C	*Standard*
	-40°C ~ +85°C	
Frequency Stability:	±100 ppm	
	± 50 ppm	*Standard*
	± 30 ppm	
	± 15 ppm	
Frequency Tolerance:	±100 ppm	
(at 25°C)	± 50 ppm	*Standard*
	± 30 ppm	
	± 10 ppm	

Load Capacitance: Standard 18 pF or series.
Please specify your required load.

Resistance: Maximum resistance corresponds to frequency.
See chart below.

Standard: Mode: Fundamental or 3rd Overtone
Shunt Capacitance: 7 pF Max
Aging: ± 5 ppm/year
Drive Level: 1.0 mW Max

Optional Features: Tape and Reel (1K per Reel)

Note: Not all combinations of the above tolerances, stabilities, and temperature ranges are available. Consult the factory if your requirement is not standard.

CX506

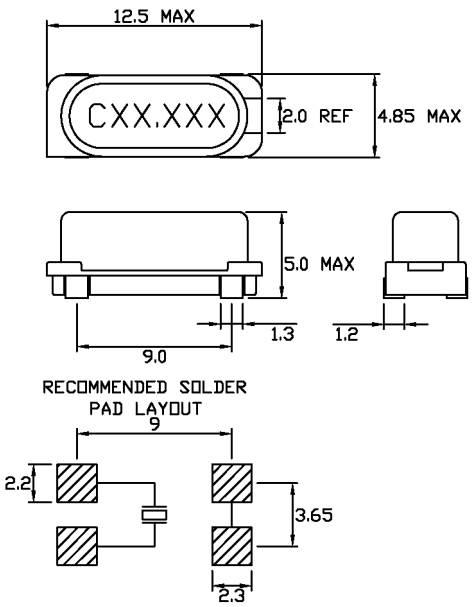

Resistance Chart: *All resistances are maximum values.*

EQUIVALENT SERIES RESISTANCE (ESR), MODE OF OPERATION (MODE), AND CUT					
Frequency MHz	**ESR(Ω)**	**Mode/cut**	**Frequency MHz**	**ESR (Ω)**	**Mode/cut**
3.579545~4.999	200 Max	Fund./AT	15.000~15.999	60 Max	Fund./AT
5.000~5.999	150 Max	Fund./AT	16.000~23.999	50 Max	Fund./AT
6.000~7.999	120 Max	Fund./AT	24.000~30.000	40 Max	Fund./AT
8.000~8.999	90 Max	Fund./AT	24.000~48.000	40 Max	Fund./BT
9.000~9.999	80 Max	Fund./AT	24.576~29.999	150 Max	3rd Overtone/AT
10.000~14.999	70 Max	Fund./AT	30.000~75.000	100 Max	3rd Overtone/AT

Cardinal Components, Inc.
155 Route 46 West
Wayne, NJ 07470
Rev: C-090414-11

TEL: (973)785-1333
E-MAIL: sales@cardinalxtal.com
WEB: http://www.cardinalxtal.com

Ceramic Surface Mount Crystal

- *Small overall package dimensions*
- *Available in both 2 & 4 pads*

Series CX532

Pb RoHS COMPLIANT 2002 / 95 / EC

Part Numbering Example: CX532 Z - A1 B2 C2 150 - 10.0 D16 - 3

CX532	Z	A1*	B2	C2	150	10.0	D16	- 3
SERIES	**ADDED FEATURES**	**OPERATING TEMP.**	**STABILITY**	**TOLERANCE**	**RESISTANCE**	**FREQUENCY**	**LOAD CAP.**	**OVERTONE**
CX532	BLANK = BULK PACK Z = TAPE AND REEL	A0 = -10°C ~ +60°C A1 = -10°C ~ +70°C A2 = -40°C ~ +85°C A3 = -55°C ~ +125°C	B1 = ±100 B2 = ± 50 B3 = ± 30 B4 = ± 10	C1 = ±100 C2 = ± 50 C3 = ± 30 C4 = ± 10	SEE CHART BELOW		D16,18,20,ETC. DS = SERIES	BLANK: FUND. -3: 3rd OT -5: 5th OT -7: 7th OT -BT: BT Cut

***NOTE:** *The above ABC combinations cover basic specification options. We tailor our crystal specifications to meet customer requirements. Please contact our sales department if you don't see exactly what you need.*

Specifications:

Frequency Range:	10.000 ~ 45.000 MHz	*(Fundamental)*
Operating Temperature:	-10°C ~ +60°C	*Standard*
Frequency Stability:	±100 ppm ± 50 ppm ± 30 ppm	 *Standard*
Frequency Tolerance: *(at 25°C)*	±100 ppm ± 50 ppm ± 30 ppm	 *Standard*
Load Capacitance:	Standard 16, 18 pF or series. Other values are available.	
Resistance:	Maximum resistance corresponds to frequency. See chart below.	
Standard:	Mode: Fundamental or 3rd Overtone Shunt Capacitance: 7 pF Max Aging: ± 5 ppm/year Drive Level: 100 µW Max	
Option:	Packaging: Tape and Reel	

CX532

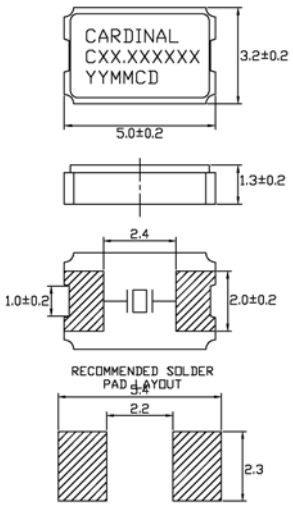

CX532A

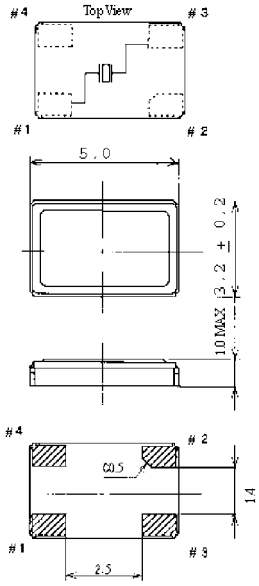

Resistance Chart: *All resistances are maximum*

EQUIVALENT SERIES RESISTANCE (ESR), MODE OF OPERATION (MODE)		
Frequency MHz	**ESR (Ω)**	**Oscillation Mode**
10.0 ~ 11.999	150	Fundamental
12.0 ~ 15.999	100	Fundamental
16.0 ~ 29.999	70	Fundamental
30.0 ~ 45.000	50	Fundamental

Cardinal Components, Inc.
155 Route 46 West
Wayne, NJ 07470

TEL: (973)785-1333
E-MAIL: sales@cardinalxtal.com
WEB: http://www.cardinalxtal.com

Ceramic Surface Mount Crystals

- *Very low drive level*
- *Wide frequency range*
- *Tight stabilities and tolerances*

Series CX635A CX635B

Pb RoHS COMPLIANT 2002 / 95 / EC

Part Numbering Example: CX635A Z - A1 B2 C2 50 - 11.0 D18 - 3

CX635A	Z	A1*	B2	C2	50	11.0	D18	- 3
SERIES	ADDED FEATURES	OPERATING TEMP.	STABILITY	TOLERANCE	RESISTANCE	FREQUENCY	LOAD CAP.	OVERTONE
CX635A CX635B	BLANK = BULK PACK Z = TAPE AND REEL	A0 = -10°C ~ +60°C A1 = -10°C ~ +70°C A2 = -40°C ~ +85°C A3 = -55°C ~ +125°C	B1 = ±100 B2 = ± 50 B3 = ± 30 B4 = ± 10	C1 = ±100 C2 = ± 50 C3 = ± 30 C4 = ± 10	SEE CHART BELOW		D16,18,20,ETC. DS = SERIES	BLANK: FUND. -3: 3rd OT -5: 5th OT -7: 7th OT -BT: BT Cut

***NOTE:** *The above ABC combinations cover basic specification options. We tailor our crystal specifications to meet customer requirements. Please contact our sales department if you don't see exactly what you need.*

Specifications:

Frequency Range:	11.000 ~ 150.000 MHz	
Operating Temperature:	-10°C ~ +70°C -20°C ~ +70°C -40°C ~ +85°C	*Standard*
Frequency Stability:	±50 ppm ±30 ppm ±10 ppm ± 5 ppm	*Standard*
Frequency Tolerance: *(at 25°C)*	±50 ppm ±30 ppm ±10 ppm	*Standard*
Load Capacitance:	Standard 18pF or series. Other values are available.	
Resistance:	Maximum resistance corresponds to frequency. See chart below.	
Standard:	Mode: Fundamental, 3rd or 5th Overtone Shunt Capacitance: 7 pF Max Aging: ± 5 ppm/year Drive Level: 50 µW Packaging: Tape and Reel (1K per Reel)	

Note: Not all combinations of the above tolerances, stabilities, and temperature ranges are available. Consult the factory if your requirement is not standard.

CX635A

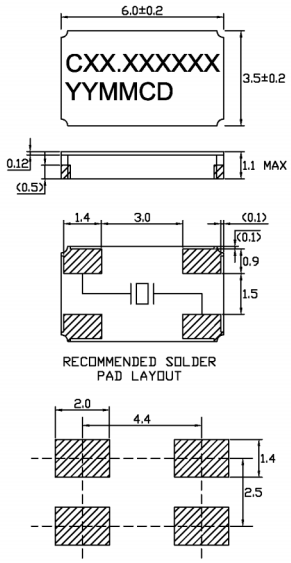

CX635B

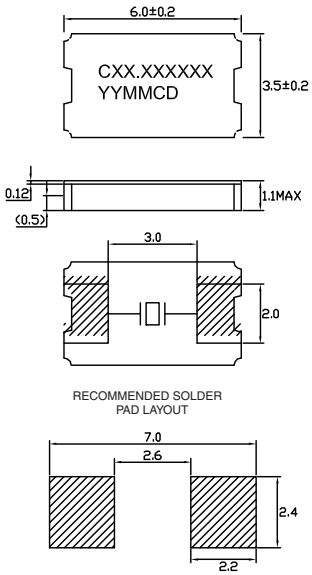

Resistance Chart: *All resistances are maximum*

EQUIVALENT SERIES RESISTANCE (ESR), MODE OF OPERATION (MODE)		
Frequency MHz	**ESR (Ω)**	**Oscillation Mode**
11.0 ~ 13.99	50	Fundamental
14.0 ~ 24.99	40	Fundamental
25.0 ~ 54.99	30	Fundamental
55.0 ~ 100.00	70	3rd Overtone
100.0 ~ 150.00	100	5th Overtone

Cardinal Components, Inc.
155 Route 46 West
Wayne, NJ 07470
Rev: C-090414-11

TEL: (973)785-1333
E-MAIL: sales@cardinalxtal.com
WEB: http://www.cardinalxtal.com

Oscillator Section

Page Number	Output Type	Oscillator	PCB Mount	Package Dimension (LxWxH) in mm	Package Style	Voltage (V)	Freq Range Low (MHz)	Freq Range High (MHz)
O-2	CMOS	**CC85**	SMD	5x7x1.7	Ceramic	3.3, 5.0	8	125
O-3	CMOS	**CC532**	SMD	5x3.2x1.0	Ceramic	3.0, 3.3, 5.0	8	67
O-4	CMOS	**CAMs**	SMD	3.2x2.5x1.0, 5x3.2x1.2, 5x7x1.7	Ceramic	1.8, 2.5, 3.3	1.5	133
O-7	CMOS, LSTTL	**CCO65S**	SMD	5.1x7.5x1.7	Ceramic	5	1.8432	125
O-8	CMOS, LSTTL	**CC065L**	SMD	5.1x7.5x1.7	Ceramic	3.3	1.8432	80
O-9	CMOS, LSTTL	**CCO65H**	SMD	5.1x7.5x1.7	Ceramic	5	1.8432	80
O-10	CMOS, LVTTL	**CAM**	SMD	Half, Full, 5x3.2x1.2, 5x7x1.7, 9x14x4.8	Can, Ceramic	2.5, 3.3	1.5	200
O-13	CMOS, LVTTL	**CSSC**	SMD	5x3.2x1.2, 5x7x1.7	Ceramic	2.5, 3.3	1.5	200
O-16	CMOS, TTL	**CC137**	SMD	5x3.2x1.0	Ceramic	3.3, 5.0	1.5	100
O-17	CMOS, TTL	**CPO**	SMD	9x14x4.7	Plastic	5	1.5	70
O-18	LVDS	**CAL**	SMD	5x7x1.8	Ceramic	3.3	1.5	200
O-19	LVDS	**CHL**	SMD	5x7x1.8	Ceramic	3.3	200	800
O-20	LVDS	**CFL**	SMD	9x14x3.5	FR4	3.3	38	640
O-21	LVDS	**CFL4**	SMD	9x14x3.5	FR4	3.3	38	640
O-22	LVDS	**CPPHV**	SMD	5x7x1.8	Ceramic	3.3	200	700
O-23	LVDS	**CPPV9**	SMD	9.4x11.4x3.0	FR4	3.3, 5.0	1	133
O-25	LVDS	**CPPV7**	SMD	5x7x1.8x1.8	Ceramic	3.3	1	200
O-26	LVPECL	**CAE**	SMD	5x7x1.8	Ceramic	3.3	1.5	200
O-27	LVPECL	**CHE**	SMD	5x7x1.8	Ceramic	3.3	200	800
O-28	LVPECL	**CFED**	SMD	9x14x3.5	FR4	3.3	38	640
O-29	LVPECL	**CFE4**	SMD	9x14x3.5	FR4	3.3	38	640
O-30	LVPECL	**CPPHE**	SMD	5x7x1.8	Ceramic	3.3	200	700
O-31	LVPECL	**CPPE9**	SMD	9.4x11.4X3.0	FR4	3.3, 5.0	1	133
O-33	LVPECL	**CPPE7**	SMD	5x7x1.8	Ceramic	3.3	1	200
O-34	CMOS	**CPP**	SMD, TH	Half, Full, 5x3.2x1.2, 5x7x1.7, 9x14x4.8	Can, Ceramic, Plastic	2.7, 3.3, 5.0	0.5	133
O-39	CMOS	**CPPFX**	SMD, TH	Half, Full, 5x3.2x1.2, 5x7x1.7, 9x14x4.8	Can, Ceramic, Plastic	2.7, 3.3, 5.0	0.5	133
O-44	CMOS	**CPPD**	SMD, TH	Half, Full, 5x3.2x1.2, 5x7x1.7, 9x14x4.8	Can, Ceramic, Plastic	2.7, 3.3, 5.0	0.5	133
O-49	CMOS, TTL	**CPPL**	SMD, TH	Half, Full, 5x3.2x1.2, 5x7x1.7, 9x14x4.8	Can, Ceramic, Plastic	2.7, 3.3, 5.0	0.5	133
O-54	CMOS, TTL	**CH11**	TH	Half, Full	Can	3.3, 5.0	1.8432	100
O-56	CMOS,TTL	**CTH11**	TH	Half, Full	Can	3.3, 5.0	1	70
O-58	TTL	**C11**	TH	Half, Full	Can	5	1	100

Dip Oscillator Package Dimensions

Style 1 Full Size 14 Pin Dip

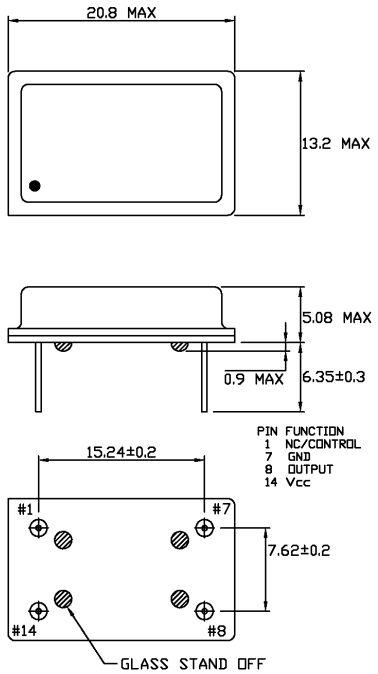

Style 3 Full Size 14 Pin Dip Gull Wing

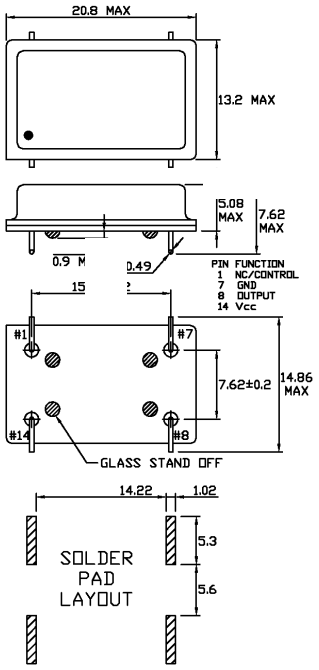

Style 4 Half Size 8 Pin Dip

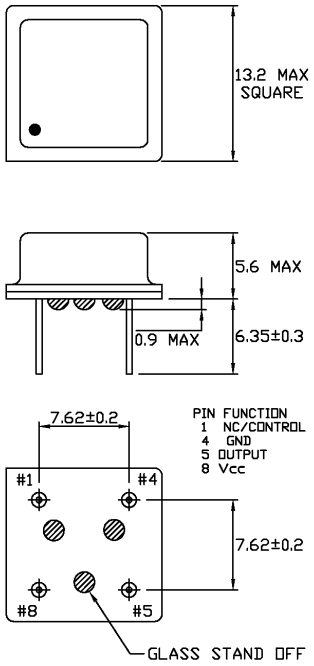

Style 6 Half Size 8 Pin Dip Gull Wing

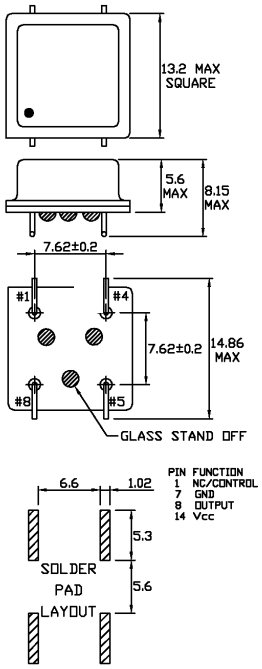

Cardinal Components, Inc.
155 Route 46 West
Wayne, NJ 07470
Rev: C-090414-11

TEL: (973)785-1333
E-MAIL: sales@cardinalxtal.com
WEB: http://www.cardinalxtal.com

Surface Mount Clock Oscillator

Series CC85

- *1.7 mm height*
- *High frequency range*
- *Tight stability available*

Pb RoHS COMPLIANT 2002 / 95 / EC

Part Numbering Example: CC85 L Z - A2 B2 45 - 83.333 TS

CC85	L	Z	A2	B2	45	83.333	TS
SERIES	**VOLTAGE**	**ADDED FEATURES**	**OPERATING TEMP.**	**STABILITY**	**SYMMETRY**	**FREQUENCY**	**TRI STATE**
CC85	Blank = 5V L = 3.3V	BLANK = BULK PACK Z = TAPE AND REEL	Blank = 0°C ~ +70°C A2 = -40°C ~ +85°C	Blank = ±100 ppm B2 = ± 50 ppm BR = ± 25 ppm	Blank = 40/60% 45 = 45/55%		Tri State Standard

Specifications:

Frequency Range:	8.000 MHz to 125.000 MHz
Available Stability Options:	±100 ppm *Standard* ±50 ppm ±25 ppm
Output Series:	HCMOS
Input Voltage:	+5.0 VDC ±10% *Standard* +3.3 VDC ±10%
Operating Temperature Range Options:	-10°C to +70°C *Standard* -40°C to +85°C
Output Voltage:	HCMOS V_{OL} = 10% V_{DD} V Max. HCMOS V_{OH} = 90% V_{DD} V Min.
Output Load:	15 pf
Maximum Input Current:	65 mA @ +5.0 VDC 30 mA @ +3.3 VDC
Maximum Rise/Fall Time:	3 ns
Duty Cycle:	40/60% 45/55%
Tristate Input:	+5 VDC Input +0.80 VDC Max. to Disable +3.60 VDC Min. to Enable or Open to Enable +3.3 VDC Input +0.80 VDC Max. to Disable +2.20 VDC Min. to Enable or open to Enable
Storage Temperature:	-55°C to +125°C
Packaging:	Tape and Reel (1K per Reel)

CC85

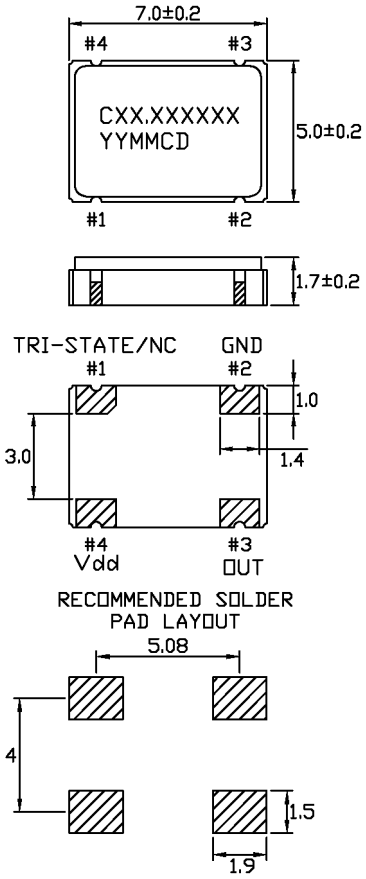

Cardinal Components, Inc.
155 Route 46 West
Wayne, NJ 07470
Rev: C-090414-11

TEL: (973)785-1333
E-MAIL: sales@cardinalxtal.com
WEB: http://www.cardinalxtal.com

Surface Mount Clock Oscillator

Series CC532

- *5.0 x 3.2 x 1.0 mm (L x W x H)*
- *Low power consumption*
- *Tight stability available*
- *Tristate capable*

Pb RoHS COMPLIANT 2002 / 95 / EC

Part Numbering Example: CC532 L Z - A B2 45 - 33.333 TS

CC532	L	Z	A	B2	45	33.333	TS
SERIES	VOLTAGE	ADDED FEATURES	OPERATING TEMP.	STABILITY	SYMMETRY	FREQUENCY	TRI STATE
CC532	Blank = 5V L = 3.3V E = 3.0V	BLANK = BULK PACK Z = TAPE AND REEL	Blank = 0°C ~ +70°C A1=-10°C ~ +70°C	Blank = ±100 ppm B2 = ± 50 ppm	Blank = 40/60% 45 = 45/55%		Tri State Standard

Specifications:

Frequency Range:	8.00 MHz to 67.000 MHz
Available Stability Options:	±100 ppm *Standard* ±50 ppm
Output Series:	HCMOS
Input Voltage:	+5.0 VDC ±10% *Standard* +3.3 VDC ±10% +3.0 VDC ±10%
Operating Temperature Range Options:	-10°C to +70°C
Output Voltage:	HCMOS V_{OL} = 10% V_{DD} V Max. HCMOS V_{OH} = 90% V_{DD} V Min.
Output Load:	15 pf
Maximum Rise/Fall Time:	10 ns
Duty Cycle:	40/60% 45/55%
Tristate Input:	+5 VDC Input +0.80 VDC Max. to Disable +3.60 VDC Min. to Enable or open to Enable +3.3 VDC Input +0.80 VDC Max. to Disable +2.20 VDC Min. to Enable or open to Enable
Storage Temperature:	-40°C to +85°C
Packaging:	Tape and Reel (1K per Reel)

CC532

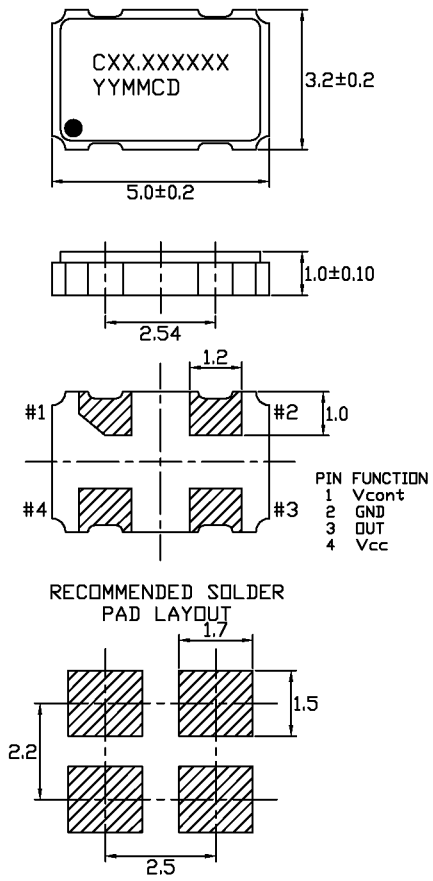

Cardinal Components, Inc.
155 Route 46 West
Wayne, NJ 07470
Rev: C-090414-11

TEL: (973)785-1333
E-MAIL: sales@cardinalxtal.com
WEB: http://www.cardinalxtal.com

Programable HCMOS Oscillator

Platinum Series CAMs

- *Extra Small Packaging Style*
- *Low Jitter*
- *Low Phase Noise*
- *Immediate Delivery*

RoHS COMPLIANT 2002 / 95 / EC

Part Numbering Example: CAMs C 3 Q Z - A5 B6 - XXX.XXXX TS

CAMs	C	3	Q	Z	A5	B6	XXX.XXXX	TS
SERIES	**OUTPUT**	**PACKAGE STYLE**	**VOLTAGE**	**PACKAGING OPTIONS**	**OPERATING TEMP.**	**STABILITY**	**FREQUENCY**	**TRI-STATE**
CAMs	C=HCMOS	3 = 3.2 X 2.5 Ceramic 5 = 5.0 X 3.2 Ceramic 7 = 5.0 X 7.0 Ceramic	Q = 1.8 V S = 2.5 V L = 3.3 V	Blank = Bulk T = Tube Z = Tape and Reel	Blank = 0°C +70°C A5 = -20°C +70°C A7 = -40°C +85°C	B6 = ±100 ppm BP = ±50 ppm BR = ±25 ppm	1.5~133.000 MHz	TS = Tri-State PD= Power Down NC = No Connect

Specifications:

Description	Min	Typ	Max	Unit
Frequency Range: Programmable to Any Discrete Frequency	1.500		133.000	MHz
Available Stability Options:	-100 -50 -25		100 50 25	ppm ppm ppm
Supply Voltage Options: (1.5–133 MHz)	2.97 2.25 1.62	3.3 2.5 1.8	3.63 2.97 1.98	V
Operating Temperature Range Options:	0 -20 -40		+70 +70 +85	°C °C °C
Storage Temperature:	-55		+125	°C
Aging (PPM/Year) Ta=25C, Vdd=3.3V/2.5V			±5	

Output Level:	HCMOS
Packaging:	Tape and Reel (1K per Reel) Tube

Operating Conditions:

Description	Min	Max	Unit
Vdd Rise Time:	100		µS
HCMOS Max Capacitive Load on outputs for CMOS levels Frequency: < 40 MHz Frequency: 40–133 MHz		 25 15	 pF pF

Cardinal Components, Inc.
155 Route 46 West
Wayne, NJ 07470
Rev: C-090414-11

TEL: (973)785-1333
E-MAIL: sales@cardinalxtal.com
WEB: http://www.cardinalxtal.com

- *Extra Small Packaging Styles*
- *Low Jitter*
- *Low Phase Noise*
- *Immediate Delivery*

Electrical Characteristics

Description	Test Conditions	Min	Typ	Max	Unit
Input Characteristics (Pin 1): V_{IL}, Low–Level Input Voltage TO DISABLE OUTPUT				0.2Vdd	V
V_{IH}, High–Level Input Voltage TO ENABLE OUTPUT OR open		0.7VddV			
I_{IL}, Input Low Current I_{IH}, Input High Current	V_{IN} = 0V V_{IN} =Vdd			80 10	µA µA
Output Characteristics: V_{OL}, Low–Level Output Voltage	8 mA I_{OL}			0.4	V
V_{OHCMOS}, High-level HCMOS Voltage	-8 mA I_{OL}	Vdd-0.4			V
Power Supply Current: (Loaded)	1.8V Vdd, Output Freq ≤ 133 MHz			15	mA
Tri-State Internal Pull-up:	Output Active when pin 1 high	50	70	90	kΩ
Tri-State Leakage Current:	TS option, Pin 1 low			20	µA
Power Down Current:	PD option, Pin 1 low			10	µA

"Tristate internal pull up. Output active when high"

Output Clock Switching Characteristics

Description	Test Conditions	Min	Typ	Max	Unit
Duty Cycle: HCMOS @ Vdd/2		45		55	%
Output Clock Rise/Fall:	0.2–0.8Vdd, C_L = 15		2		nS
Start Up Time:	From power on		3	10	mS
RMS Period Jitter:			7	10	pS
RMS Integrated Jitter:	12kHz to 20MHz		30		pS
Phase Noise:	@ 10kHz			-90	dBc/Hz

Style 7 5x7 Ceramic SMD

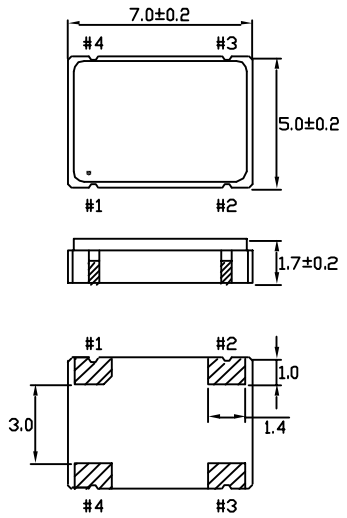

PIN FUNCTION
1 CONTROL
2 GND
3 OUTPUT
4 Vdd

Recommended Solder Pad Layout

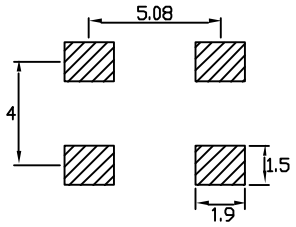

Style 3 3.2x2.5 Ceramic SMD

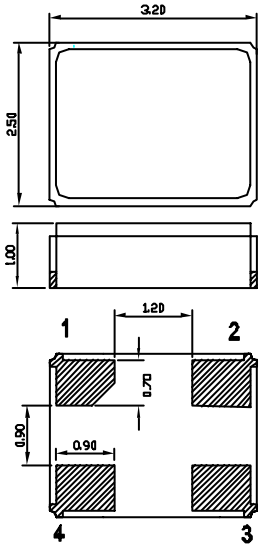

PIN FUNCTION
1 CONTROL
2 GND
3 OUTPUT
4 Vdd

Recommended Solder Pad Layout

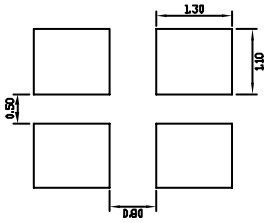

Style 5 5x3.2 Ceramic SMD

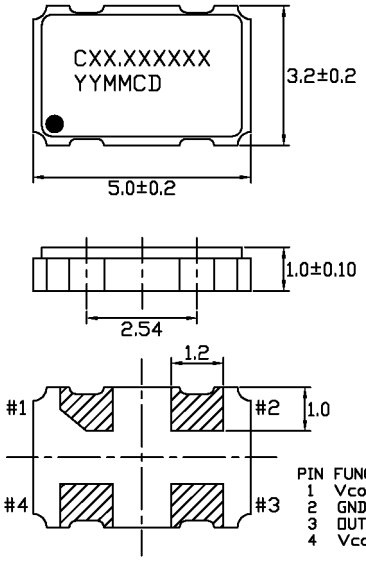

PIN FUNCTION
1 CONTROL
2 GND
3 OUTPUT
4 Vdd

Recommended Solder Pad Layout

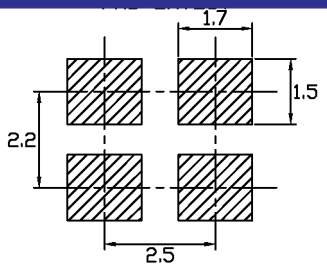

Note: *Bypass Vdd to GND with a 0.01µF capacitor*

Surface Mount Clock Oscillator

Series CC065S

- *Tristate capable*
- *1.7 mm height*

RoHS COMPLIANT 2002 / 95 / EC

Part Numbering Example: CC065S Z - A2 B2 45 - 33.333 TS

CC065S	Z	A2	B2	45	33.333	TS
SERIES	**ADDED FEATURES**	**OPERATING TEMP.**	**STABILITY**	**SYMMETRY**	**FREQUENCY**	**TRI STATE**
CC065S	BLANK = BULK PACK Z = TAPE AND REEL	Blank = 0°C ~ +70°C A2 = -40°C ~ +85°C	Blank = ±100 ppm B2 = ± 50 ppm	Blank = 40/60% 45 = 45/55%		Tri State Standard

Specifications:

Frequency Range:	1.8432 MHz to 125.000 MHz
Available Stability Options:	±100 ppm *Standard* ±50 ppm
Output Series:	HCMOS
Input Voltage:	+5.0 VDC ±10%
Operating Temperature Range Options:	-10°C to +70°C *Standard* -40°C to +85°C
Output Voltage:	V_{OL} = 0.5 V Max. V_{OH} = 4.5 V Min.
Output Load:	10 LS TTL, 15 pf CMOS
Maximum Input Current:	25 mA (1.8432 to 31.999 MHz) 35 mA (32.000 to 70.000 MHz)
Maximum Rise/Fall Time:	10 ns
Duty Cycle:	40/60% 45/55%
Max. Start-Up Time:	10 ms
Tristate Input:	+0.80 VDC Max. to Disable +3.60 VDC Min. to Enable or open to Enable
Storage Temperature:	-55°C to +125°C
Packaging:	Tape and Reel (1K per Reel)

CC065S

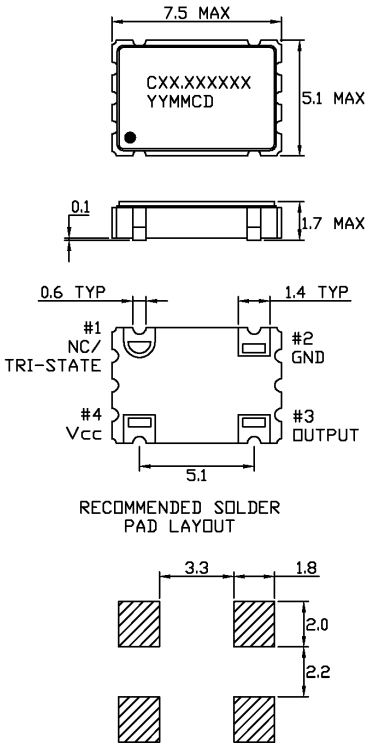

TEST CIRCUIT

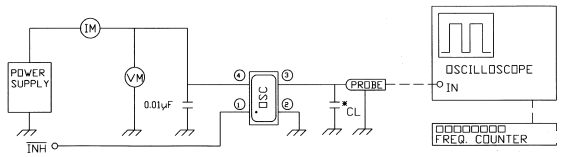

* CL=15pF or 50pF : Total Fixture And Probe Capacitance

OUTPUT WAVE FORM

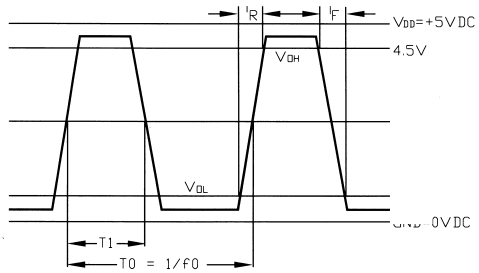

SYMMETRY = $(T_1/T_0) \times 100\%$

Cardinal Components, Inc.
155 Route 46 West
Wayne, NJ 07470
Rev: C-090414-11

TEL: (973)785-1333
E-MAIL: sales@cardinalxtal.com
WEB: http://www.cardinalxtal.com

Surface Mount Clock Oscillator

Series CC065L

- *1.7 mm height*
- *3.3 VDC operation*
- *TTL State Capable*

RoHS COMPLIANT 2002 / 95 / EC

Part Numbering Example: CC065L Z - A2 B2 45 - 33.333 TS

CC065L	Z	A2	B2	45	33.333	TS
SERIES	ADDED FEATURES	OPERATING TEMP.	STABILITY	SYMMETRY	FREQUENCY	TRI STATE
CC065L	BLANK = BULK PACK Z = TAPE AND REEL	Blank = 0°C ~ +70°C A2 = -40°C ~ +85°C	Blank = ±100 ppm B2 = ± 50 ppm	Blank = 40/60% 45 = 45/55%		Tri State Standard

Specifications:

Frequency Range:	1.8432 MHz to 80.000 MHz
Available Stability Options:	±100 ppm *Standard* ±50 ppm
Output Series:	HCMOS
Input Voltage:	+3.3 VDC ±10%
Operating Temperature Range Options:	-10°C to +70°C -40°C to +85°C
Output Voltage:	V_{OL} = .33 V Max. V_{OH} = 2.97 V Min.
Output Load:	10 LS TTL, 15 pf CMOS
Maximum Input Current:	25 mA (1.8432 to 31.999 MHz) 40 mA (32.000 to 80.000 MHz)
Maximum Rise/Fall Time:	7 ns
Duty Cycle:	40/60% 45/55%
Max. Start-Up Time:	10 ms
Tristate Input:	+0.80 VDC Max. to Disable +2.20 VDC Min. to Enable or open to Enable
Storage Temperature:	-55°C to +125°C
Packaging:	Tape and Reel (1K per Reel)

CC065L

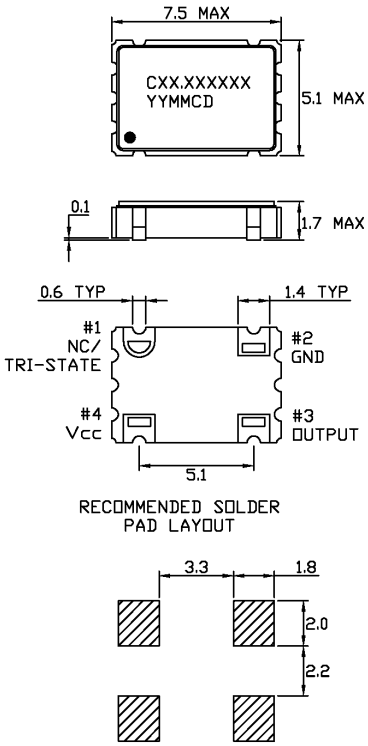

TEST CIRCUIT

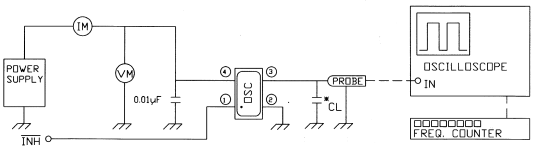

* CL=15pF or 50pF : Total Fixture And Probe Capacitance

OUTPUT WAVE FORM

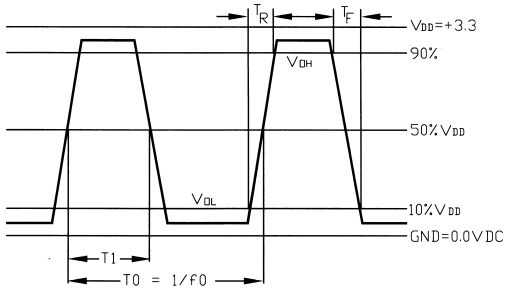

SYMMETRY = $(T_1/T_0) \times 100\%$

Cardinal Components, Inc.
155 Route 46 West
Wayne, NJ 07470
Rev: C-090414-11

TEL: (973)785-1333
E-MAIL: sales@cardinalxtal.com
WEB: http://www.cardinalxtal.com

Surface Mount Clock Oscillator

Series CC065H

- *Tristate capable*
- *1.7 mm height*
- *50 pf load compatible*

RoHS COMPLIANT 2002 / 95 / EC

Part Numbering Example: CC065H Z - A2 B2 45 - 33.333 TS

CC065H	Z	A2	B2	45	33.333	TS
SERIES	**ADDED FEATURES**	**OPERATING TEMP.**	**STABILITY**	**SYMMETRY**	**FREQUENCY**	**TRI STATE**
CC065H	BLANK = BULK PACK Z = TAPE AND REEL	Blank = 0°C ~ +70°C A2 = -40°C ~ +85°C	Blank = ±100 ppm B2 = ± 50 ppm	Blank = 40/60% 45 = 45/55%		Tri State Standard

Specifications:

Frequency Range:	1.8432 MHz to 80.000 MHz
Available Stability Options:	±100 ppm *Standard* ±50 ppm
Output Series:	LSTTL / HCMOS
Input Voltage:	+5.0 VDC ±10%
Operating Temperature Range Options:	-10°C to +70°C *Standard* -40°C to +85°C
Output Voltage:	V_{OL} = 0.5 V Max. V_{OH} = 4.5 V Min.
Output Load:	10 TTL, 50 pf CMOS
Maximum Input Current:	27 mA (1.8432 to 31.999 MHz) 45 mA (32.000 to 49.999 MHz) 75 mA (50.000 to 80.000 MHz)
Maximum Rise/Fall Time:	7 ns
Duty Cycle:	40/60% *Standard* 45/55%
Max. Start-Up Time:	10 ms
Tristate Input:	+0.80 VDC Max. to Disable +3.60 VDC Min. to Enable or open to Enable
Storage Temperature:	-55°C to +125°C
Packaging:	Tape and Reel (1K per Reel)

CC065H

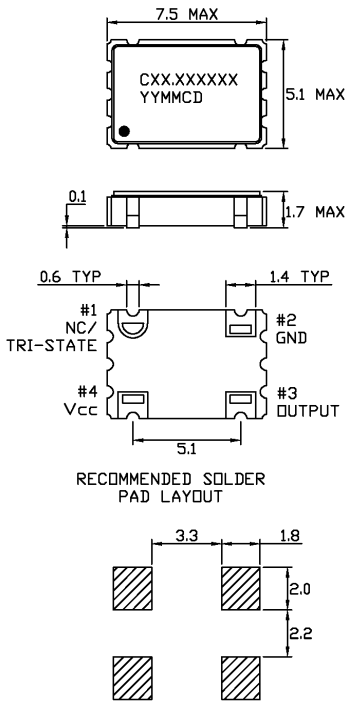

TEST CIRCUIT

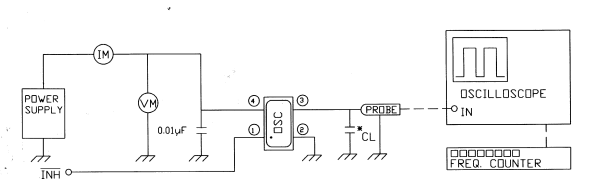

* CL=15pF or 50pF : Total Fixture And Probe Capacitance

OUTPUT WAVE FORM

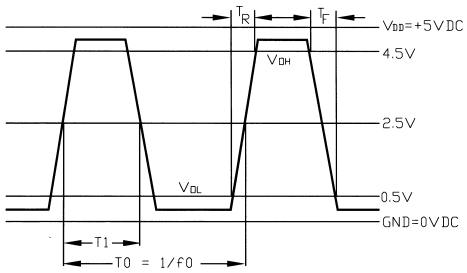

SYMMETRY = $(T_1/T_0) \times 100\%$

Cardinal Components, Inc.
155 Route 46 West
Wayne, NJ 07470
Rev: C-090414-11

TEL: (973)785-1333
E-MAIL: sales@cardinalxtal.com
WEB: http://www.cardinalxtal.com

Programmable HCMOS Oscillator

Platinum Series CAM

- *TTL Compatible (3.3v)*
- *2 Packaging Styles*
- *Ultra Low Jitter*
- *Low Phase Noise*
- *Immediate Delivery*

Pb RoHS COMPLIANT 2002 / 95 / EC

Part Numbering Example: CAM C 7 L Z - A5 B6 - XXX.XXXX TS

CAM	C	7	L	Z	A5	B6	XXX.XXXX	TS
SERIES	**OUTPUT**	**PACKAGE STYLE**	**VOLTAGE**	**PACKAGING OPTIONS**	**OPERATING TEMP.**	**STABILITY**	**FREQUENCY**	**TRI-STATE**
CAM	C=HCMOS	1 = Full Size 4 = Half Size 5 = 5 X 3.2 Ceramic 7 = 5 X 7 Ceramic	L = 3.3 V S = 2.5 V	Blank = Bulk T = Tube Z = Tape and Reel	Blank = 0°C +70°C A5 = -20°C +70°C A7 = -40°C +85°C	B6 = ±100 ppm BP = ±50 ppm BR = ±25 ppm	1.500~200.000 MHz	TS = Tri-State NC = No Connect

Specifications:

Description	Min	Typ	Max	Unit
Frequency Range: Programmable to Any Discrete Frequency	1.500		200.000	MHz
Available Stability Options:	-100 -50 -25		100 50 25	ppm ppm ppm
Supply Voltage Options: (1–133 MHz) (1–200 MHz)	 2.25 3.0	 2.5 3.3	 2.75 3.6	 V V
Operating Temperature Range Options:	0 -20 -40		+70 +70 +85	°C °C °C
Storage Temperature:	-55		+125	°C
Aging (PPM/Year) Ta=25C, Vdd=3.3V/2.5V			±5	
Output Level:	HCMOS			
Packaging:	Tape and Reel (1K per Reel) Tube			

Operating Conditions:

	Description	Min	Max	Unit
Vdd	Supply Voltage	2.25	3.6	V
Vdd	Rise Time	100		µS
HCMOS	Max Capacitive Load on outputs for CMOS levels Frequency: < 40 MHz Frequency: 40–200 MHz		 30 15	 pF pF

Cardinal Components, Inc.
155 Route 46 West
Wayne, NJ 07470
Rev: C-090414-11

TEL: (973)785-1333
E-MAIL: sales@cardinalxtal.com
WEB: http://www.cardinalxtal.com

Programmable HCMOS Oscillator

Platinum Series CAM

- *TTL Compatible (3.3v)*
- *2 Packaging Styles*
- *Low Jitter*
- *Low Phase Noise*
- *Immediate Delivery*

Electrical Characteristics

Description	Test Conditions	Min	Typ	Max	Unit
Input Characteristics (Pin 1): V_{IL}, Low–Level Input Voltage TO DISABLE OUTPUT	3.0–3.6V Vdd			0.2Vdd	V
V_{IH}, High–Level Input Voltage TO ENABLE OUTPUT OR OPEN	3.0–3.6V Vdd	0.7VddV			
I_{IL}, Input Low Current I_{IH}, Input High Current	V_{IN} = 0V V_{IN} =Vdd			80 10	µA µA
Output Characteristics: V_{OL}, Low–Level Output Voltage	3.0V–3.6V Vdd, 8 mA I_{OL}			0.4	V
V_{OHCMOS}, High-level HCMOS Voltage	2.25V–3.6V Vdd, -8 mA I_{OL}	Vdd-0.4			V V
Power Supply Current: (unloaded)	2.25–3.6 Vdd, Output Freq $\leq$ 200 MHz			35	mA
Tristate Internal Pull-Up Res:	2.25–3.6V Vdd, V_{IN} = 0.7V Output active when high	50	70	90	KΩ
Tri-State Leakage Current:	3.6V Vdd		20		µA
Output Enable Mode:	Output is Tri-Stated				

"Tristate internal pull up. Output active when high"

Output Clock Switching Characteristics

Description	Test Conditions	Min	Typ	Max	Unit
Duty Cycle: HCMOS @ Vdd/2	2.25 V – 3.6V Vdd	45		55	%
Output Clock Rise/Fall:	0.2–0.8Vdd, 2.25–3.6 Vdd, C_L = 30 0.2–0.8Vdd, 2.25–3.6 Vdd, C_L = 15			4.0 2.4	nS nS
Start Up Time:	From power on		3	10	mS
RMS Period Jitter:			10		pS
RMS Integrated Jitter:	12kHz to 20MHz		15		pS
Phase Noise:	@ 10kHz			-100	dBc/Hz

Cardinal Components, Inc.
155 Route 46 West
Wayne, NJ 07470

TEL: (973)785-1333
E-MAIL: sales@cardinalxtal.com
WEB: http://www.cardinalxtal.com

HCMOS Oscillator

Platinum Series CAM

- *TTL Compatible (3.3v)*
- *2 Packaging Styles*
- *Low Jitter*
- *Low Phase Noise*
- *Immediate Delivery*

Style 7 5x7 Ceramic SMD

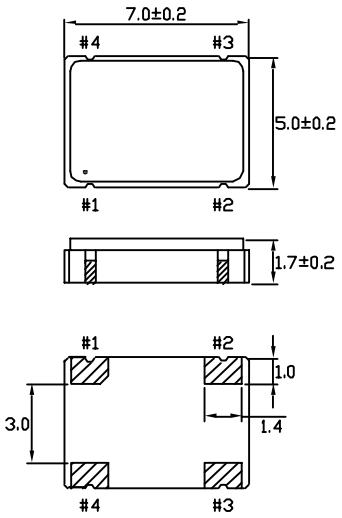

PIN FUNCTION
1 CONTROL
2 GND
3 OUTPUT
4 Vdd

Recommended Solder Pad Layout

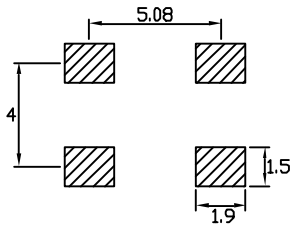

Style 5 5x3.2 Ceramic SMD

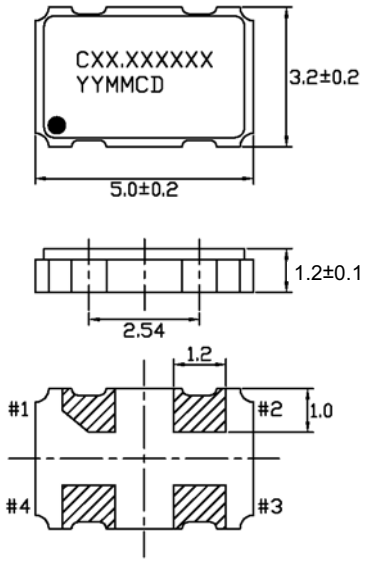

PIN FUNCTION
1 CONTROL
2 GND
3 OUTPUT
4 Vdd

Recommended Solder Pad Layout

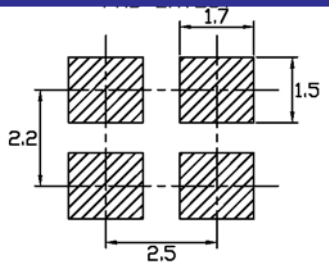

Note: *Bypass Vdd to GND with a 0.01µF capacitor*

Cardinal Components, Inc.
155 Route 46 West
Wayne, NJ 07470
Rev: C-090414-11

TEL: (973)785-1333
E-MAIL: sales@cardinalxtal.com
WEB: http://www.cardinalxtal.com

Programmable HCMOS Oscillator

- *LVTTL Compatible*
- *Cost Effective EMI Reduction*
- *Center Spread* ±0.25% ±2%
- *Down Spread* -0.50% - 4%
- *Immediate Delivery*

Pb RoHS COMPLIANT 2002 / 95 / EC

Spread Spectrum CSSC

- Copiers
- *LAN*
- *Printers, Scanners*
- *Industrial Automation*
- *Consumer Electronics*

Part Numbering Example: CSSC C 7 L Z - A5 B6 - XXX.XXXX TS C

CSSC	7	L	Z	A5	B6	XXX.XXXX	TS	C YYYY
SERIES	STYLE	VOLTAGE	PACKAGING	OPERATING TEMP.	STABILITY	FREQUENCY	TRI-STATE	SPREAD SPECTRUM
CSSC	5 = 5 X 3.2 7 = 5 X 7	L = 3.3 V S = 2.5 V	Blank = Bulk T = Tube Z = T & R	Blank = 0°C +70°C A5 = -20°C +70°C A7 = -40°C +85°C	B6 = ±100 ppm BP = ±50 ppm	1.500~200.000 MHz	TS = Tri-State	C = Center Spread D = Down Spread

Specifications:

Description	Min	Typ	Max	Unit
Frequency Range: Programmable to Any Discrete Frequency	8.000		200.000	MHz
Available Stability Options:	-100 -50		100 50	ppm ppm
Supply Voltage Options: (1.5–166 MHz) (1.5–200 MHz)	 2.25 3.0	 2.5 3.3	 2.75 3.6	 V V
Operating Temperature Range Options:	0 -20 -40		+70 +70 +85	°C °C °C
Storage Temperature:	-55		+125	°C
Aging (PPM/Year) Ta=25C, Vdd=3.3V/2.5V			±5	
Output Level:	HCMOS			
Packaging:	Tape and Reel (1K per Reel) Tube			

Operating Conditions:

	Description	Min	Max	Unit
Vdd	Supply Voltage	2.25	3.6	V
Vdd	Rise Time	100		µS
HCMOS	Max Capacitive Load on outputs for CMOS levels Frequency: < 40 MHz Frequency: 40–200 MHz		 30 15	 pF pF

Cardinal Components, Inc.
155 Route 46 West
Wayne, NJ 07470

TEL: (973)785-1333
E-MAIL: sales@cardinalxtal.com
WEB: http://www.cardinalxtal.com

Programmmable HCMOS Oscillator Spread Spectrum

Series CSSC

- *LVTTL Compatible*
- *EMI Reduction*
- *Center Spread* ±0.25% ±2%
- *Down Spread* -0.50% -4%
- *Immediate Delivery*

Pb RoHS COMPLIANT 2002 / 95 / EC

Electrical Characteristics

Description	Test Conditions	Min	Typ	Max	Unit
Input Characteristics (Pin 1): V_{IL}, Low–Level Input Voltage TO DISABLE OUTPUT	3.0–3.6V Vdd			0.2Vdd	V
V_{IH}, High–Level Input Voltage TO ENABLE OUTPUT OR NO CONNECT	3.0–3.6V Vdd	0.7Vdd			V
I_{IL}, Input Low Current I_{IH}, Input High Current	V_{IN} = 0V V_{IN} =Vdd			80 10	µA µA
Output Characteristics: V_{OL}, Low–Level Output Voltage	3.0V–3.6V Vdd, 8 mA I_{OL}			0.4	V
V_{OHCMOS}, High-level HCMOS Voltage	2.25V–3.6V Vdd, -8 mA I_{OL}	Vdd-0.4			V V
Power Supply Current: (unloaded)	2.25–3.6 Vdd, Output Freq ≤ 200 MHz			35	mA
Tristate internal Pull-Up Res:	Output active when high		1 M		ohm
Tri-State Leakage Current:	3.6V Vdd		20		µA
Output Enable Mode:	Output is Tri-Stated				

Output Clock Switching Characteristics

Description	Test Conditions	Min	Typ	Max	Unit
Duty Cycle: HCMOS @ Vdd/2	2.25 V – 3.6V Vdd	45		55	%
Output Clock Rise/Fall:	0.2–0.8Vdd, 2.25–3.6 Vdd, C_L = 30 0.2–0.8Vdd, 2.25–3.6 Vdd, C_L = 15			4.0 2.4	nS nS
Start Up Time:	From power on		3	10	mS
RMS Cycle to Cycle Jitter	**@ > 20 MHz**			13	pS
pk-pk cycle to cycle jitter	@ > 20 MHz			140	pS

HCMOS Oscillator

Spread Spectrum CSSC

- *LVTTL Compatible*
- *EMI Reduction*
- *Center Spread* ± 0.25% ± 2%
- *Down Spread* - 0.50% - 4%
- *Immediate Delivery*

YYYY	Center Spread	
0250	± 0.25	
0500	± 0.5	
0750	± 0.75	
1000	± 1.0	
1500	± 1.5	
2000	± 2.0	

YYYY		Down Spread
500		-0.5
1000		-1.0
1500		-1.5
2000		-2.0
3000		-3.0
4000		-4.0

Style 7 5x7 Ceramic SMD

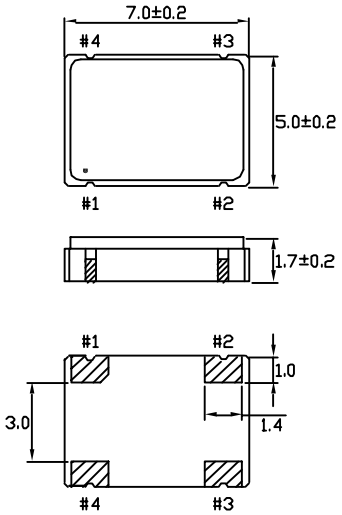

PIN FUNCTION
1 CONTROL
2 GND
3 OUTPUT
4 Vdd

Recommended Solder Pad Layout

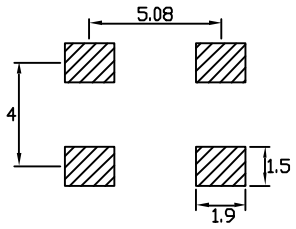

Style 5 5x3.2 Ceramic SMD

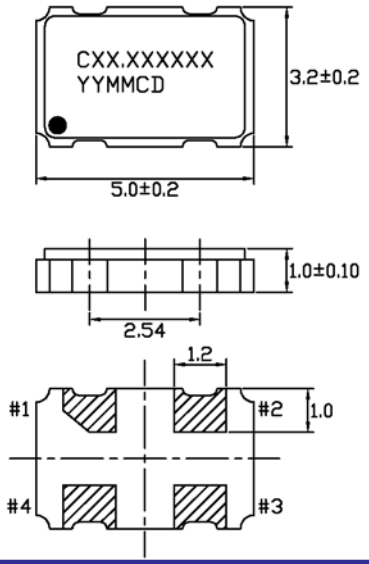

PIN FUNCTION
1 CONTROL
2 GND
3 OUTPUT
4 Vdd

Recommended Solder Pad Layout

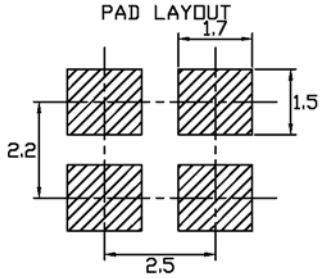

Note: *Bypass Vdd to GND with a 0.01µF capacitor*

Cardinal Components, Inc.
155 Route 46 West
Wayne, NJ 07470
Rev: C-090414-11

TEL: (973)785-1333
E-MAIL: sales@cardinalxtal.com
WEB: http://www.cardinalxtal.com

Ceramic Surface Mount Oscillator

- *5.0 x 3.2 x 0.95 (L x W x H)*
- *Small size*

Series CC137

Pb RoHS COMPLIANT 2002 / 95 / EC

Part Numbering Example: CC137 L Z - A0 B2 45 - 33.333 TS

CC137	L	Z	A0	B2	45	33.333	TS
SERIES	**VOLTAGE**	**ADDED FEATURES**	**OPERATING TEMP.**	**STABILITY**	**SYMMETRY**	**FREQUENCY**	**TRI STATE**
CC137	Blank = 5V L = 3.3V	BLANK = BULK PACK Z = TAPE AND REEL	A0=-10°C ~+60°C	Blank = ±100 ppm B2 = ± 50 ppm B3 = ± 30 ppm	Blank = 40/60% 45 = 45/55%		Tri State Standard

Specifications:

Frequency Range:	1.500 MHz to 100 MHz
Available Stability Options:	±100 ppm ±50 ppm ±30 ppm
Output Series:	TTL/HCMOS
Input Voltage:	+5.0 VDC ±10% +3.3 VDC ±10%
Operating Temperature Range Options:	-10°C to +60°C
Output Voltage:	TTL V_{OL} = 0.4 V Max. TTL V_{OH} = 2.4 V Min. HCMOS V_{OL} = 10% V_{DD} V Max. HCMOS V_{OH} = 90% V_{DD} V Min.
Output Load:	10 TTL, 15 pf CMOS @+5 VDC 5 TTL, 15 pf CMOS @+3.3 VDC
Maximum Input Current:	20 mA
Maximum Rise/Fall Time:	10 nsec
Duty Cycle:	40/60% 45/55%
Storage Temperature:	-40°C to +85°C
Packaging:	Tape and Reel (1K per Reel)

CC137

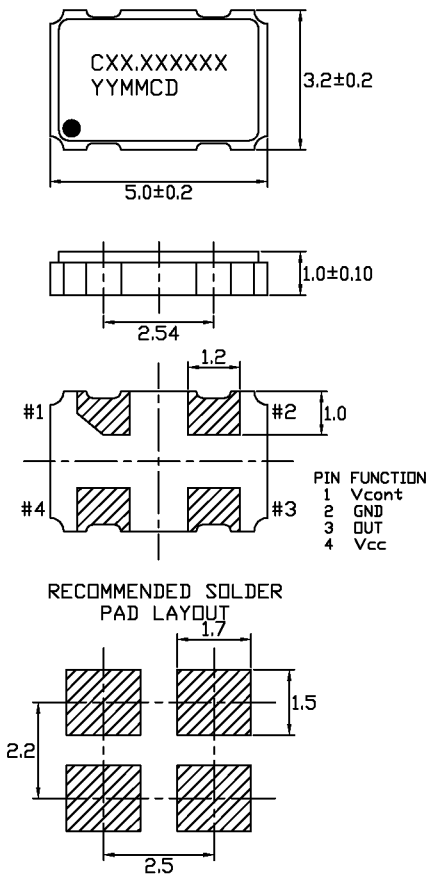

Cardinal Components, Inc.
155 Route 46 West
Wayne, NJ 07470
Rev: C-090414-11

TEL: (973)785-1333
E-MAIL: sales@cardinalxtal.com
WEB: http://www.cardinalxtal.com

Surface Mount Clock Oscillator

Series CPO

- *Tristate capable*
- *TTL/HCMOS compatible*

RoHS COMPLIANT 2002 / 95 / EC

Part Numbering Example: CP0 Z A2 B2 45 - 33.333 TS

CPO	Z	A2	B2	45	33.333	TS
SERIES	ADDED FEATURES	OPERATING TEMP.	STABILITY	SYMMETRY	FREQUENCY	TRI STATE
CPO	BLANK = BULK PACK Z = TAPE AND REEL	Blank = 0°C ~ +70°C A2 = -40°C ~ +85°C	Blank = ±100 ppm B2 = ± 50 ppm	Blank = 40/60% 45 = 45/55%		Tri State Standard

Specifications:

Frequency Range:	1.500 MHz to 70.000 MHz
Available Stability Options:	±100 ppm *Standard* ±50 ppm ±25 ppm
Output Series:	TTL/HCMOS
Input Voltage:	+5.0 VDC ±10%
Operating Temperature Range Options:	-10°C to +70°C *Standard* -40°C to +85°C
Output Voltage:	V_{OL} = 0.5 V Max. V_{OH} = 4.5 V Min.
Output Load:	10 TTL or 50 pf (1.500 to 49.999 MHz) 10 TTL or 30 pf (50.000 to 70.000 MHz)
Maximum Input Current:	23 mA (1.500 to 26.999 MHz) 30 mA (27.000 to 29.999 MHz) 35 mA (30.000 to 49.999 MHz) 45 mA (50.000 to 69.999 MHz)
Maximum Rise/Fall Time:	8 ns (1.500 to 49.999 MHz) 7 ns (50.000 to 70.000 MHz)
Duty Cycle:	40/60% 45/55%
Maximum Frequency Aging at +25°C:	±5 ppm/yr
Max. Start-Up Time:	10 ms
Tristate Input:	+0.80 VDC Max. to Disable +3.60 VDC Min. to Enable or open to Enable
Storage Temperature:	-55°C to +125°C
Package:	Tape and Reel (1K per Reel)

CPO

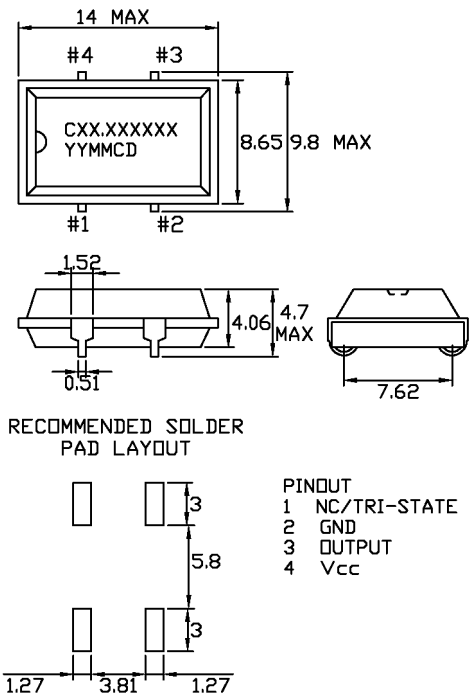

TEST CIRCUIT

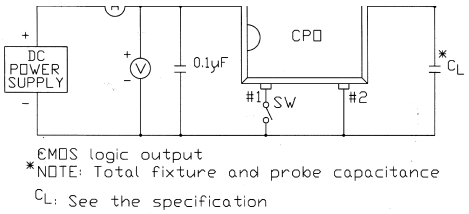

OUTPUT WAVE FORM

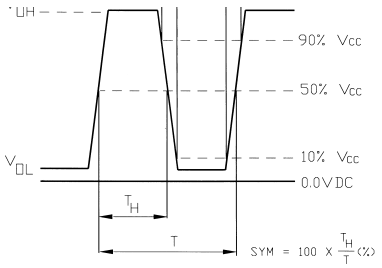

Cardinal Components, Inc.
155 Route 46 West
Wayne, NJ 07470
Rev: C-090414-11

TEL: (973)785-1333
E-MAIL: sales@cardinalxtal.com
WEB: http://www.cardinalxtal.com

Programmable LVDS Oscillator

* LVDS Output
* Fast Delivery
* Industry Standard Packaging

Applications

* Serial Communications
* Routers
* Switches
* WAN Interfaces
* Test Equipment

Platinum Series CAL

RoHS COMPLIANT 2002 / 95 / EC

Part Numbering Example: CAL L Z - A5 BP - 22.5792 TS

CAL	L	Z	A5	BP	22.5792	TS
SERIES	VOLTAGE	PACKAGING OPTIONS	OPERATING TEMP.	STABILITY	FREQUENCY	TRI-STATE
CAL	L = 3.3V S = 2.5V	Blank = Bulk Z = Tape and Reel	Blank = 0°C ~ +70°C A5 = -20°C ~ +70°C A7 = -40°C ~ +85°C	Blank = ±100 ppm BP = ±50 ppm		TS = Tri-State

Specifications:	Min	Typ	Max	Unit
Frequency Range:	1.5		200	MHz
Stability:	-50		+ 50	ppm
Supply Voltage:	3.135	3.3	3.465	V
Vdd Rise Time:	100			µS
Operating Temperature:	-20		+ 70	°C
Storage Temperature:	-55		+ 125	°C
Duty Cycle:	45		55	%
Start-Up Time:		3	10	mS
Aging: (ppm/1st Year) Ta=25C, Vdd=3.3V			5	ppm
Supply Current:			130	mA
Short Circuit Current:		± 50		mA
RMS Period Jitter:		10		pS
RMS Integrated Jitter: 12kHz to 20MHz		15		pS
Phase Noise @ 10kHz:			-100	dBc/Hz
Output Voltage: Voh Vol	 0.9		 1.6	 V V
Output Differential Voltage:	240	350	460	mV
Rise/Fall Time:		0.4	0.8	nS
Output Level:		LVDS		
Packaging:		Tape and Reel 1000 pcs per Reel		

Tri State Internal pull up resistor 70K ohms, output active when high

CAL

Dimensions are in mm

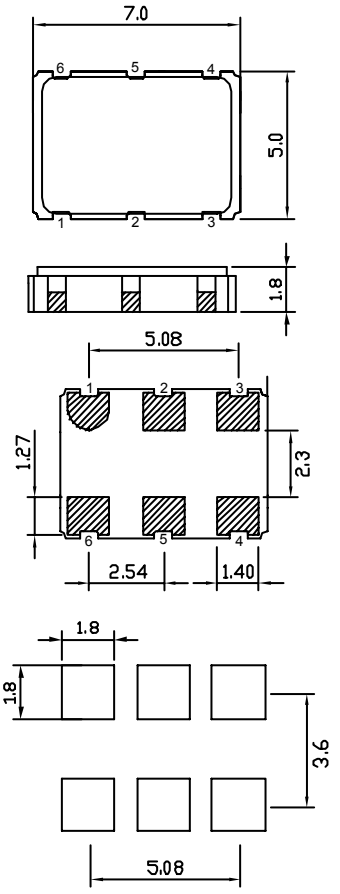

Solder Pad Layout

PIN Function
1 OE (CMOS)
2 Do Not Connect
3 Ground
4 LVDS +
5 LVDS -
6 Vdd

LVDS Levels Test Circuit

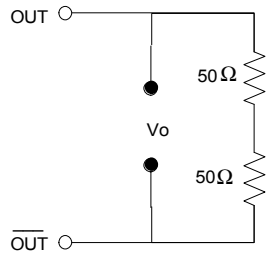

Cardinal Components, Inc.
155 Route 46 West
Wayne, NJ 07470
Rev: C-090414-11

TEL: (973)785-1333
E-MAIL: sales@cardinalxtal.com
WEB: http://www.cardinalxtal.com

Programmable LVDS Oscillator

* LVDS Output
* Fast Delivery
* Industry Standard Packaging

Applications

* Serial Communications
* Routers
* Switches
* WAN Interfaces
* Test Equipment

Platinum Series CHL

Pb RoHS COMPLIANT 2002 / 95 / EC

Part Numbering Example: CHL Z - A5 BP - 222.5792 TS

CHL	Z	A5	BP	222.5792	TS
SERIES	PACKAGING OPTIONS	OPERATING TEMP.	STABILITY	FREQUENCY	TRI-STATE
CHL	Blank = Bulk Z = Tape and Reel	Blank = 0°C ~ +70°C A5 = -20°C ~ +70°C A7 = -40°C ~ +85°C	Blank = ±100 ppm BP = ±50 ppm		TS = Tri-State

Specifications:	Min	Typ	Max	Unit
Frequency Range:	200		800	MHz
Stability:	-50		+ 50	ppm
Supply Voltage:	3.135	3.3	3.465	V
Vdd Rise Time:	100			µS
Operating Temperature:	-20		+ 70	°C
Storage Temperature:	-55		+ 125	°C
Duty Cycle:	45		55	%
Start-Up Time:		3	10	mS
Aging: (ppm/1st Year) Ta=25C, Vdd=3.3V			5	ppm
Supply Current:			140	mA
Short Circuit Current:		± 50		mA
RMS Period Jitter:		15		pS
RMS Integrated Jitter: 12kHz to 20MHz		20		pS
Phase Noise @ 10kHz:			-90	dBc/Hz
Output Voltage: Voh Vol	 0.9		 1.6	 V V
Output Differential Voltage:	240	350	460	mV
Rise/Fall Time:		0.4	0.8	nS
Output Level:		LVDS		
Packaging:		Tape and Reel 1000 pcs per Reel		

Tristate internal pull up resistor--
output active when high

CHL

Dimensions are in mm

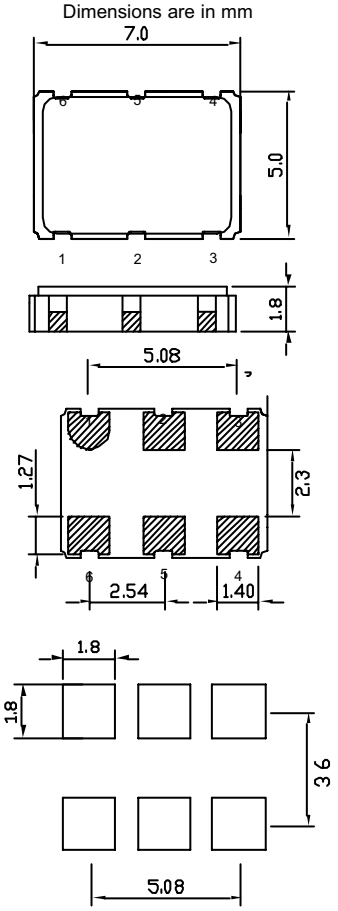

Solder Pad Layout

PIN Function
1 OE (CMOS)
2 Do Not Connect
3 Ground
4 LVDS +
5 LVDS -
6 Vdd

LVDS Levels Test Circuit

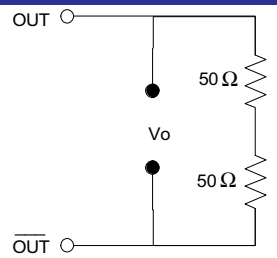

Cardinal Components, Inc.
155 Route 46 West
Wayne, NJ 07470
Rev: C-090414-11

TEL: (973)785-1333
E-MAIL: sales@cardinalxtal.com
WEB: http://www.cardinalxtal.com

LVDS Surface Mount XO

Series CFL

* **LVDS Output**
* **Industry Standard Outline**

Applications
* Serial Communications
* Routers
* Switches
* WAN Interfaces
* Test Equipment

Pb RoHS COMPLIANT 2002 / 95 / EC

Part Numbering Example: CFL Z - A5 BP - 222.5792 TS

CFL	Z	A5	BP	222.5792	TS
SERIES	PACKAGING OPTIONS	OPERATING TEMP.	STABILITY	FREQUENCY	TRI-STATE
CFL	Blank = Bulk Z = Tape and Reel	Blank = 0°C ~ +70°C A5 = -20°C ~ +70°C A7 = -40°C ~ +85°C	Blank = ±100 ppm BP = ±50 ppm		TS = Tri-State

Specifications:	Min	Typ	Max	Unit
Frequency Range:	38		640	MHz
Stability:	-50		+ 50	ppm
Supply Voltage:	3.135	3.3	3.465	V
Operating Temperature:	-40		+ 85	°C
Storage Temperature:	-55		+ 125	°C
Duty Cycle:	45		55	%
Start-Up Time:		3	10	mS
Aging: (ppm/1st Year) Ta=25C, Vdd=3.3V			5	ppm
Supply Current:			100	mA
Short Circuit Current:		± 50		mA
RMS Period Jitter:		5		pS
RMS Integrated Jitter: 12kHz to 20MHz		0.7		pS
Phase Noise @ 10kHz:			-120	dBc/Hz
Output Voltage: Voh Vol	 Vdd - 0.9		 Vdd - 1.6	 V V
Output Differential Voltage:	247	355	454	mV
Rise/Fall Time:		0.4	0.8	nS
Output Level:		LVDS		
Packaging:		Tape and Reel 1000 pcs per Reel		

Tristate internal pull up output, active when high

CFL

Dimensions are in mm

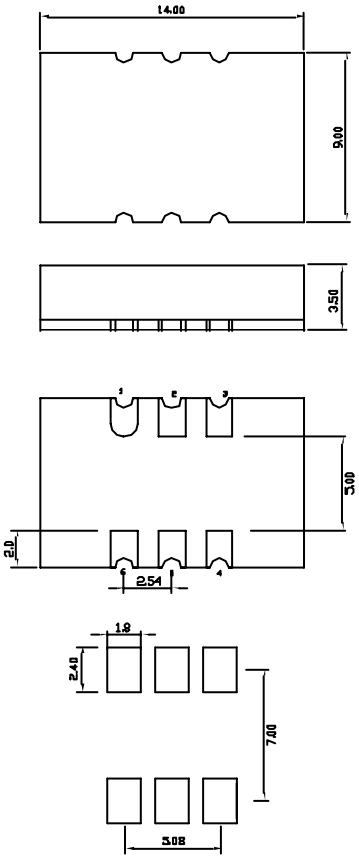

PIN Function
1 ENABLE
2 NO CONNECT
3 Ground
4 LVDS +
5 LVDS -
6 Vdd

LVDS Levels Test Circuit

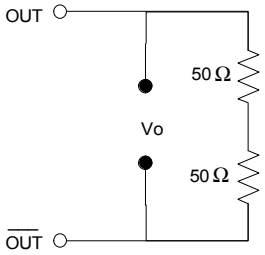

Cardinal Components, Inc.
155 Route 46 West
Wayne, NJ 07470
Rev: C-090414-11

TEL: (973)785-1333
E-MAIL: sales@cardinalxtal.com
WEB: http://www.cardinalxtal.com

LVDS Surface Mount XO

Series CFL4

* **LVDS Output**
* **Industry Standard Outline**

Applications
* **Serial Communications**
* **Routers**
* **Switches**
* **WAN Interfaces**
* **Test Equipment**

Pb RoHS COMPLIANT 2002 / 95 / EC

Part Numbering Example: CFL4 Z - A5 BP - 222.5792

CFL4	Z	A5	BP	222.5792
SERIES	**PACKAGING OPTIONS**	**OPERATING TEMP.**	**STABILITY**	**FREQUENCY**
CFL4	Blank = Bulk Z = Tape and Reel	Blank = 0°C ~ +70°C A5 = -20°C ~ +70°C A7 = -40°C ~ +85°C	Blank = ±100 ppm BP = ±50 ppm	

Specifications:	Min	Typ	Max	Unit
Frequency Range:	38		640	MHz
Stability:	-50		+ 50	ppm
Supply Voltage:	3.135	3.3	3.465	V
Operating Temperature:	-40		+ 85	°C
Storage Temperature:	-55		+ 125	°C
Duty Cycle:	45		55	%
Start-Up Time:		3	10	mS
Aging: (ppm/1st Year) Ta=25C, Vdd=3.3V			5	ppm
Supply Current:			100	mA
Short Circuit Current:		± 50		mA
RMS Period Jitter:		5		pS
RMS Integrated Jitter: 12kHz to 20MHz		0.7		pS
Phase Noise @ 10kHz:			-120	dBc/Hz
Output Voltage: Voh Vol	 Vdd - 0.9		 Vdd - 1.6	 V V
Output Differential Voltage:	247	355	454	mV
Rise/Fall Time:		0.4	0.8	nS
Output Level:		LVDS		
Packaging:		Tape and Reel 1000 pcs per Reel		

CFL4

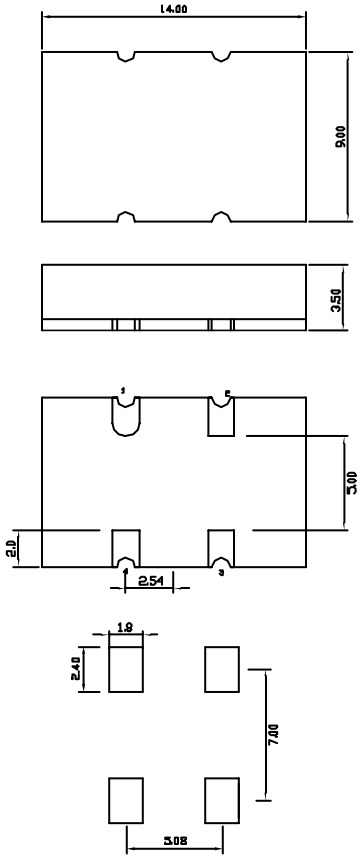

PIN Function
1 LVDSL-
2 Ground
3 LVDS+
4 VDD

LVDS Levels Test Circuit

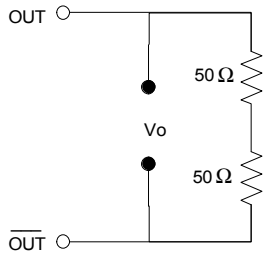

Cardinal Components, Inc.
155 Route 46 West
Wayne, NJ 07470
Rev: C-090414-11

TEL: (973)785-1333
E-MAIL: sales@cardinalxtal.com
WEB: http://www.cardinalxtal.com

Programmable LVDS Oscillator

Series **CPPHV**

* LVDS Output
* Factory Programmable
* Differential LVDS Output
* Industry Standard Packaging

Applications

* Serial Communications
* Routers
* Switches
* WAN Interfaces
* Test Equipment

Pb RoHS COMPLIANT 2002 / 95 / EC

Part Numbering Example: CPPHV7-A7BR-Freq.

Specifications:	Min	Typ	Max	Unit
Frequency Range:	200		700	MHz
Stability:	-25		+ 25	ppm
Supply Voltage:	3.125	3.3	3.465	V
Operating Temperature:	-40		+ 85	°C
Storage Temperature:	-55		+ 125	°C
Duty Cycle:	45		55	%
Start-Up Time:		3	10	mS
Aging: (ppm/1st Year) Ta=25C, Vdd=3.3V			5	ppm
Static Discharge Voltage:	2000			V
Supply Current:			130	mA
Short Circuit Current:		± 50		mA
Jitter (RMS) Period:		10		pS
Output Voltage Voh			1.6	V
Vol	0.9			V
Rise/Fall Time:		0.7	1.0	nS
Output Level:		LVDS		
Packaging:		Tape and Reel 1000 pcs per Reel		

Tristate internal pull up, output active when high

LVDS Levels Test Circuit

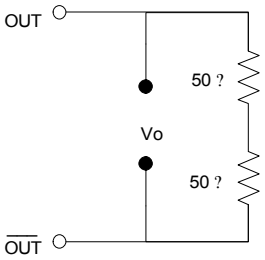

Dimensions are in mm

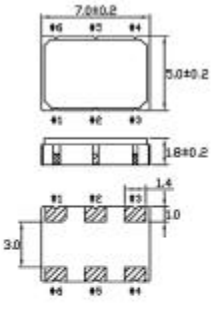

PIN Function
1 OE (CMOS)
2 Do Not Connect
3 Ground
4 LVDS +
5 LVDS -
6 Vdd

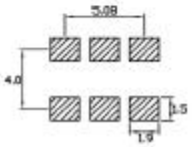

Solder Pad Layout

Cardinal Components, Inc.
155 Route 46 West
Wayne, NJ 07470
Rev: C-090414-11

TEL: (973)785-1333
E-MAIL: sales@cardinalxtal.com
WEB: http://www.cardinalxtal.com

Field Programmable LVDS Blank Oscillator Applications

Series CPPV9

- *Programmed with PG2000P/PG3000 within seconds*
- *Programmable 2 times*
- *Provides a sealed finished custom oscillator*
- *9.6 x 11.4 SMD*

RoHS COMPLIANT 2002 / 95 / EC

Part Numbering Example: CPPV9 LZ A5 B6 100.0

CPPV9	L	Z	A5	B6	100.000
SERIES	VOLTAGE	ADDED FEATURES	OPERATING TEMP	STABILITY	FREQUENCY
	Blank = 5 V L = 3.3 V	Blank = Bulk T = Tube Z = Tape/Reel	Blank = 0 – +70 °C A5 = -20 – +70 °C A7 = -40 – +85 °C	B6 = ±100 ppm BP = ±50 ppm	1.000 – 133.0 MHz

Specifications:	Min	Typ	Max	Unit
Frequency Range:	1.0		133.0	MHz
Available Stability Options:	-100 -50		100 50	ppm ppm
Prog. Supply Voltage:	4.75 3.135	5.0 3.3	5.25 3.465	V V
Operating Temperature Range Options:	-20 -40		70 85	°C °C
Storage Temperature:	-55		125	°C
Aging (PPM/1st Year): Ta=25C, Vdd=3.3V			±5	
Diff. Clock Rise Time	0.2	0.7	1.0	ns
Diff. Clock Fall Time	0.2	0.7	1.0	ns
Output Level:	LVDS			

Tristate internal pull up,
output active when high.

Notes: Recommended 0.01 µF bypass capacitor from Vdd to Gnd. Capacitor should be as close to oscillator as possible.

Cardinal Components, Inc.
155 Route 46 West
Wayne, NJ 07470
Rev: C-090414-11

TEL: (973)785-1333
E-MAIL: sales@cardinalxtal.com
WEB: http://www.cardinalxtal.com

CPPV9

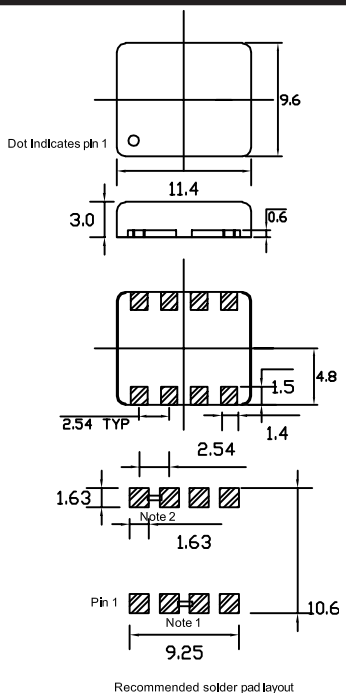

PIN FUNCTION
PIN 1 OE
PIN 2 CONNECT TO PIN 3
PIN 3 CONNECT TO PIN 2
PIN 4 GND
PIN 5 LVDS-
PIN 6 LVDS+
PIN 7 VDD
PIN 8 VDD

Note 1: Connect pin 2 to pin 3
Note 2: Connect pin 7 to pin 8

LEVELS TEST CIRCUIT

LVDS Levels Test Circuit

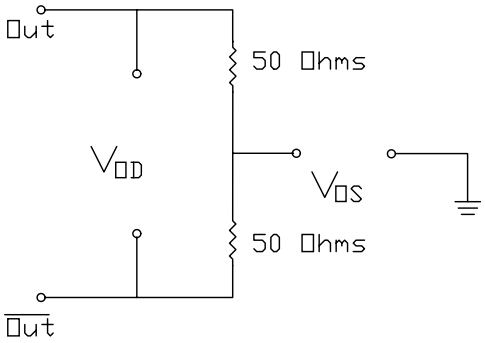

SWITCHING TEST CIRCUIT

LVDS Switching Test Circuit

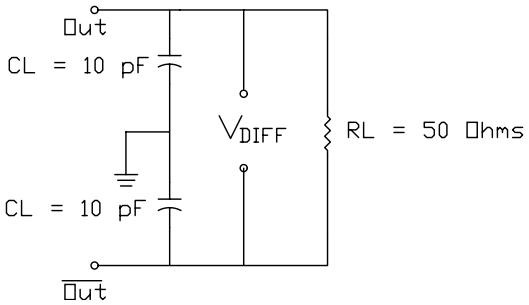

Programmable LVDS Oscillator

CARDINAL COMPONENTS

Series **CPPV7**

* LVDS Output
* Field Programmable
* Industry Standard Packaging

Applications

* Serial Communications
* Routers
* Switches
* WAN Interfaces
* Test Equipment

Pb RoHS COMPLIANT 2002 / 95 / EC

Part Numbering Example: CPPV7Z-A7BR-Freq.

CPP	V	7	Z	A7	BR	XX.XXXX
SERIES	OUTPUT	PACKAGE STYLE	ADDED FEATURES	OPERATING TEMP.	STABILITY	FREQUENCY
CPP	V= LVDS	7 = 5X7 Ceramic	Blank = Bulk T = Tube Z = Tape and Reel	Blank = - 0°C + 70°C A5 = - 20°C + 70°C A7 = - 40°C + 85°C	B6 = ±100 ppm BP = ±50 ppm BR = ±25 ppm	1 ~ 200 MHz

Specifications:	Min	Typ	Max	Unit
Frequency Range:	1		200	MHz
Stability:	-25		+ 25	ppm
Supply Voltage:	3.125	3.3	3.465	V
Operating Temperature:	-40		+ 85	°C
Storage Temperature:	-55		+ 125	°C
Duty Cycle:	45		55	%
Start-Up Time:		3	10	mS
Aging: (ppm/1st Year) Ta=25C, Vdd=3.3V			5	ppm
Static Discharge Voltage:	2000			V
Supply Current:		40	50	mA
Short Circuit Current:		± 50		mA
Jitter (RMS) Period:		6	10	pS
Output Voltage Voh Vol	 0.9		 1.6 	 V V
Rise/Fall Time:		0.7	1.0	nS
Output Level:		LVDS		
Packaging:		Tape and Reel 1000 pcs per Reel		

Tristate internal pull up, output active when high

LVDS Levels Test Circuit

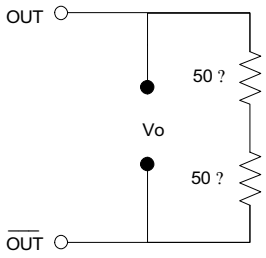

Dimensions are in mm

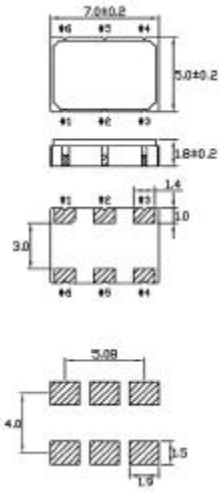

PIN Function
1 OE (CMOS)
2 Do Not Connect
3 Ground
4 LVDS +
5 LVDS -
6 Vdd

Solder Pad Layout

Cardinal Components, Inc.
155 Route 46 West
Wayne, NJ 07470

Rev: C-090414-11

TEL: (973)785-1333
E-MAIL: sales@cardinalxtal.com
WEB: http://www.cardinalxtal.com

Programmable LVPECL Oscillator

* LVPECL Output
* Fast Delivery
* Industry Standard Packaging

Applications
* Serial Communications
* Routers
* Switches
* WAN Interfaces
* Test Equipment

Platinum Series CAE

Pb RoHS COMPLIANT 2002 / 95 / EC

Part Numbering Example: CAEL Z - A5 BP - 22.5792 TS

CAE	L	Z	A5	BP	22.5792	TS
SERIES	VOLTAGE	PACKAGING OPTIONS	OPERATING TEMP.	STABILITY	FREQUENCY	TRI-STATE
CAE	L = 3.3V S = 2.5V	Blank = Bulk Z = Tape and Reel	Blank = 0°C ~ +70°C A5 = -20°C ~ +70°C A7 = -40°C ~ +85°C	Blank = ±100 ppm BP = ±50 ppm		TS = Tri-State

Specifications:	Min	Typ	Max	Unit
Frequency Range:	1.5		200	MHz
Stability:	-50		+ 50	ppm
Supply Voltage:	3.135	3.3	3.465	V
Vdd Rise Time:	100			µS
Operating Temperature:	-20		+ 70	°C
Storage Temperature:	-55		+ 125	°C
Duty Cycle:	45		55	%
Start-Up Time:		3	10	mS
Aging: (ppm/1st Year) Ta=25C, Vdd=3.3V			5	ppm
Supply Current:			130	mA
Short Circuit Current:		± 50		mA
RMS Period Jitter:		10		pS
RMS Integrated Jitter: **12kHz to 20MHz**		15		pS
Phase Noise @ 10kHz:			-100	dBc/Hz
Output Voltage: Voh Vol	 Vdd - 1.025		 Vdd - 1.62	 V V
Rise/Fall Time:		0.4	0.8	nS
Output Level:		LVPECL		
Packaging:		Tape and Reel 1000 pcs per Reel		

CAE

Dimensions are in mm

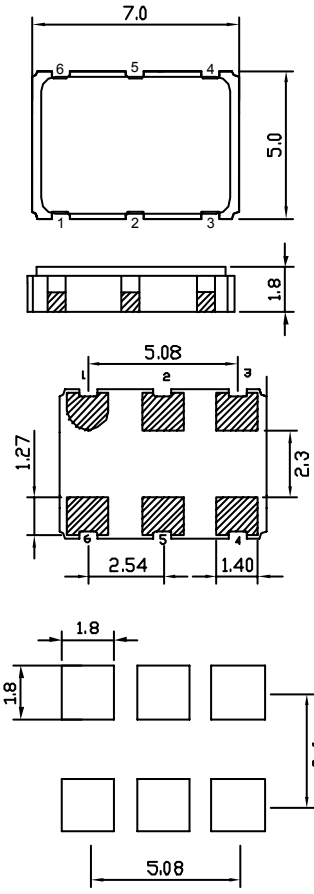

PIN Function
1 OE (CMOS)
2 Do Not Connect
3 Ground
4 LVPECL +
5 LVPECL -
6 Vdd

Solder Pad Layout

LVPECL Levels Test Circuit

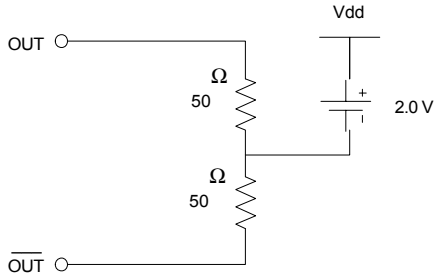

Tristate internal pull up resistor--
output active when high

Cardinal Components, Inc.
155 Route 46 West
Wayne, NJ 07470
Rev: C-090414-11

TEL: (973)785-1333
E-MAIL: sales@cardinalxtal.com
WEB: http://www.cardinalxtal.com

Programmable LVPECL Oscillator

* LVPECL Output
* Fast Delivery
* Industry Standard Packaging

Applic ations

* Serial Communications
* Routers
* Switches
* WAN Interfaces
* Test Equipment

Platinum Series CHE

RoHS COMPLIANT 2002 / 95 / EC

Part Numbering Example: CHE Z - A5 BP - 222.5792 TS

CHE	Z	A5	BP	222.5792	TS
SERIES	PACKAGING OPTIONS	OPERATING TEMP	STABILITY	FREQUENCY	TRI-STATE
CHE	Blank = Bulk Z = Tape and Reel	Blank = 0°C ~ +70°C A5 = -20°C ~ +70°C A7 = -40°C ~ +85°C	Blank = ±100 ppm BP = ±50 ppm		TS = Tri-State

CHE

Specifications:	Min	Typ	Max	Unit
Frequency Range:	200		800	MHz
Stability:	-50		+ 50	ppm
Supply Voltage:	3.135	3.3	3.465	V
Vdd Rise Time:	100			µS
Operating Temperature:	-20		+ 70	°C
Storage Temperature:	-55		+ 125	°C
Duty Cycle:	45		55	%
Start-Up Time:		3	10	mS
Aging: (ppm/1st Year) Ta=25C, Vdd=3.3V			5	ppm
Supply Current:			140	mA
Short Circuit Current:		± 50		mA
RMS Period Jitter:		15		pS
RMS Integrated Jitter: 12kHz to 20MHz		20		pS
Phase Noise @ 10kHz:			-90	dBc/Hz
Output Voltage: Voh Vol	Vdd - 1.025		 Vdd - 1.62	 V V
Rise/Fall Time:		0.4	0.8	nS
Output Level:		LVPECL		
Packaging:		Tape and Reel 1000 pcs per Reel		

Tristate internal pullup resistor output active when high

Dimensions are in mm

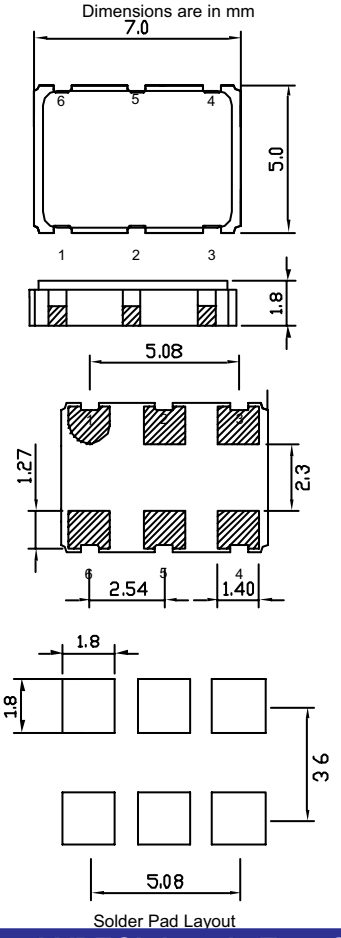

PIN Function
1 OE (CMOS)
2 Do Not Connect
3 Ground
4 LVPECL +
5 LVPECL -
6 Vdd

Solder Pad Layout

LVPECL Levels Test Circuit

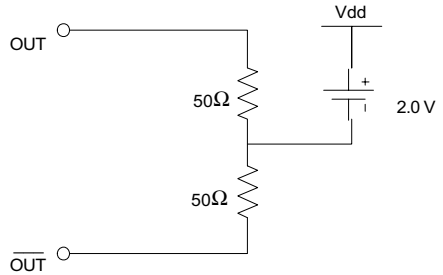

Cardinal Components, Inc.
155 Route 46 West
Wayne, NJ 07470
Rev: C-090414-11

TEL: (973)785-1333
E-MAIL: sales@cardinalxtal.com
WEB: http://www.cardinalxtal.com

LVPECL Surface Mount XO

Series CFED

* **LVPECL Output**
* **Industry Standard Outline**

Applications
* Serial Communications
* Routers
* Switches
* WAN Interfaces
* Test Equipment

Pb RoHS COMPLIANT 2002 / 95 / EC

Part Numbering Example: CFED Z - A5 BP - 222.5792 TS

CFED	Z	A5	BP	222.5792	TS
SERIES	PACKAGING OPTIONS	OPERATING TEMP.	STABILITY	FREQUENCY	TRI-STATE
CFED	Blank = Bulk Z = Tape and Reel	Blank = 0°C ~ +70°C A5 = -20°C ~ +70°C A7 = -40°C ~ +85°C	Blank = ±100 ppm BP = ±50 ppm		TS = Tri-State

CFED

Dimensions are in mm

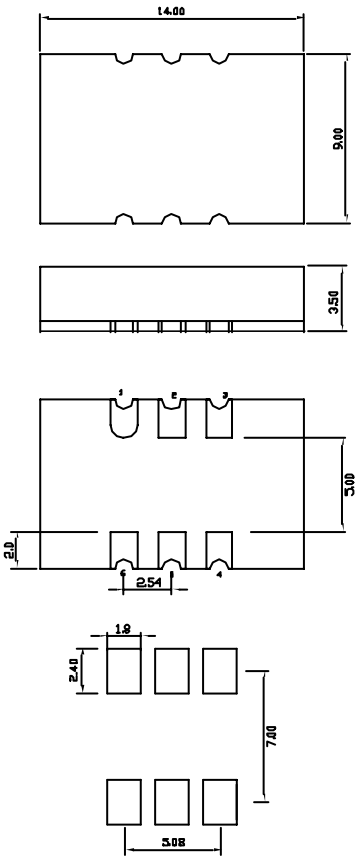

PIN Function
1 DISABLE
2 NO CONNECT
3 Ground
4 LVPECL +
5 LVPECL -
6 Vdd

Specifications:	Min	Typ	Max	Unit
Frequency Range:	38		640	MHz
Stability:	-50		+ 50	ppm
Supply Voltage:	3.135	3.3	3.465	V
Operating Temperature:	-40		+ 85	°C
Storage Temperature:	-55		+ 125	°C
Duty Cycle:	45		55	%
Start-Up Time:		3	10	mS
Aging: (ppm/1st Year) Ta=25C, Vdd=3.3V			5	ppm
Supply Current:			100	mA
Short Circuit Current:		± 50		mA
RMS Period Jitter:		5		pS
RMS Integrated Jitter: 12kHz to 20MHz		0.7		pS
Phase Noise @ 10kHz:			-120	dBc/Hz
Output Voltage: Voh Vol	 Vdd - 1.025		 Vdd - 1.62	 V V
Rise/Fall Time:		0.4	0.8	nS
Output Level:		LVPECL		
Packaging:		Tape and Reel 1000 pcs per Reel		

Tristate internal pull down output active when low

LVPECL Levels Test Circuit

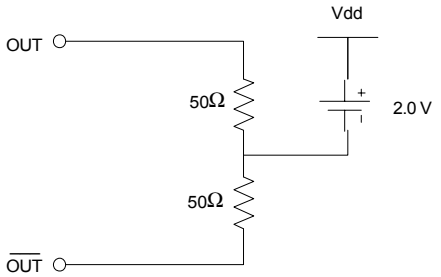

Cardinal Components, Inc.
155 Route 46 West
Wayne, NJ 07470
Rev: C-090414-11

TEL: (973)785-1333
E-MAIL: sales@cardinalxtal.com
WEB: http://www.cardinalxtal.com

LVPECL Surface Mount XO

Series CFE4

* **LVPECL Output**
* **Industry Standard Outline**

Applications
* Serial Communications
* Routers
* Switches
* WAN Interfaces
* Test Equipment

RoHS COMPLIANT 2002 / 95 / EC

Part Numbering Example: CFE4 Z - A5 BP - 222.5792

CFE4	Z	A5	BP	222.5792
SERIES	**PACKAGING OPTIONS**	**OPERATING TEMP.**	**STABILITY**	**FREQUENCY**
CFE4	Blank = Bulk Z = Tape and Reel	Blank = 0°C ~ +70°C A5 = -20°C ~ +70°C A7 = -40°C ~ +85°C	Blank = ±100 ppm BP = ±50 ppm	

Specifications:	Min	Typ	Max	Unit
Frequency Range:	38		640	MHz
Stability:	-50		+ 50	ppm
Supply Voltage:	3.135	3.3	3.465	V
Operating Temperature:	-40		+ 85	°C
Storage Temperature:	-55		+ 125	°C
Duty Cycle:	45		55	%
Start-Up Time:		3	10	mS
Aging: (ppm/1st Year) Ta=25C, Vdd=3.3V			5	ppm
Supply Current:			100	mA
Short Circuit Current:		± 50		mA
RMS Period Jitter:		5		pS
RMS Integrated Jitter: 12kHz to 20MHz		0.7		pS
Phase Noise @ 10kHz:			-120	dBc/Hz
Output Voltage: Voh Vol	 Vdd - 1.025		 Vdd - 1.62	 V V
Rise/Fall Time:		0.4	0.8	nS
Output Level:		LVPECL		
Packaging:		Tape and Reel 1000 pcs per Reel		

CFE4

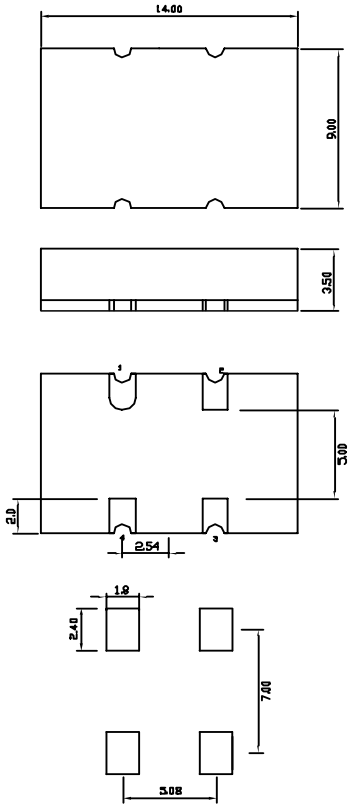

PIN Function
1 LVPECL-
2 Ground
3 LVPECL+
4 VDD

LVPECL Levels Test Circuit

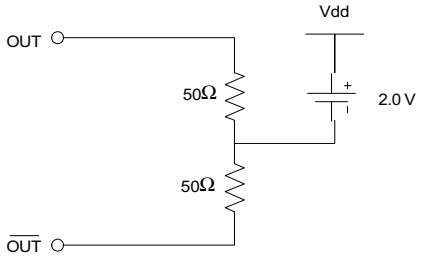

Cardinal Components, Inc.
155 Route 46 West
Wayne, NJ 07470
Rev: C-090414-11

TEL: (973)785-1333
E-MAIL: sales@cardinalxtal.com
WEB: http://www.cardinalxtal.com

Programmable LVPECL Oscillator

Series CPPHE

* LVPECL Output
* Factory Programmable
* Differential LVPECL Output
* Industry Standard Packaging

Applications

* Serial Communications
* Routers
* Switches
* WAN Interfaces
* Test Equipment

Pb RoHS COMPLIANT 2002 / 95 / EC

Part Numbering Example: CPPHE7-A7BR-Freq.

Specifications:	Min	Typ	Max	Unit
Frequency Range:	200		700	MHz
Stability:	-25		+ 25	ppm
Supply Voltage:	3.125	3.3	3.465	V
Operating Temperature:	-40		+ 85	°C
Storage Temperature:	-55		+ 125	°C
Duty Cycle:	45		55	%
Start-Up Time:		3	10	mS
Aging: (ppm/1st Year) Ta=25C, Vdd=3.3V			5	ppm
Static Discharge Voltage:	2000			V
Supply Current:			130	mA
Short Circuit Current:		± 50		mA
Jitter (RMS) Period:		10		pS
Output Voltage				
Voh	Vdd - 1.025			V
Vol			Vdd - 1.62	V
Rise/Fall Time:		0.6	1.5	nS
Output Level:		LVPECL		
Packaging:		Tape and Reel 1000 pcs per Reel		

Tristate internal pull up, output active when high

LVPECL Levels Test Circuit

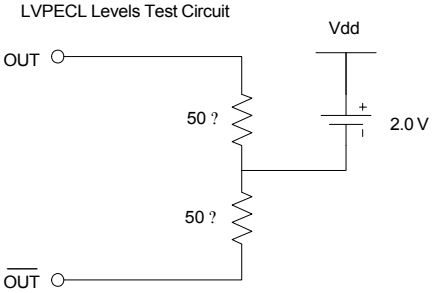

Dimensions are in mm

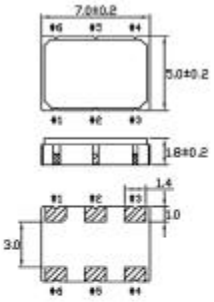

PIN Function
1 OE (CMOS)
2 Do Not Connect
3 Ground
4 LVPECL +
5 LVPECL -
6 Vdd

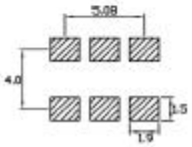

Solder Pad Layout

Cardinal Components, Inc.
155 Route 46 West
Wayne, NJ 07470
Rev: C-090414-11

TEL: (973)785-1333
E-MAIL: sales@cardinalxtal.com
WEB: http://www.cardinalxtal.com

Field Programmable PECL Oscillator

- *9.6 x 11.4 SMD*

Applications

Series CPPE9

RoHS COMPLIANT 2002 / 95 / EC

Part Numbering Example: CPPE9 LZ A5 B6 100.0

CPPE9	L	Z	A5	B6	100.000
SERIES	VOLTAGE	ADDED FEATURES	OPERATING TEMP	STABILITY	FREQUENCY
	Blank = 5 V L = 3.3 V	Blank = Bulk T = Tube Z = Tape/Reel	Blank = 0 – +70 °C A5 = -20 – +70 °C A7 = -40 – +85 °C	B6 = ±100 ppm BP = ±50 ppm	1.000 – 133.0 MHz

Specifications:	Min	Typ	Max	Unit
Frequency Range:	1.0		133.0	MHz
Available Stability Options:	-100 -50		100 50	ppm ppm
Prog. Supply Voltage:	4.75 3.135	5.0 3.3	5.25 3.465	V V
Operating Temperature Range Options:	0 -20 -40		70 70 85	°C °C °C
Storage Temperature:	-55		125	°C
Aging (PPM/1st Year): Ta=25C, Vdd=3.3V			±5	
Clock Rise Time @ 20/80 % PECL		0.6	1.5	ns
Clock Fall Time @ 80/20 % PECL		0.5	1.5	ns
Output Level:	PECL			

Tristate internal pull up, output active when high

Notes: Recommended 0.01 µF bypass capacitor from Vdd to Gnd. Capacitor should be as close to oscillator as possible.

Cardinal Components, Inc.
155 Route 46 West
Wayne, NJ 07470
Rev: C-090414-11

TEL: (973)785-1333
E-MAIL: sales@cardinalxtal.com
WEB: http://www.cardinalxtal.com

CPPE9

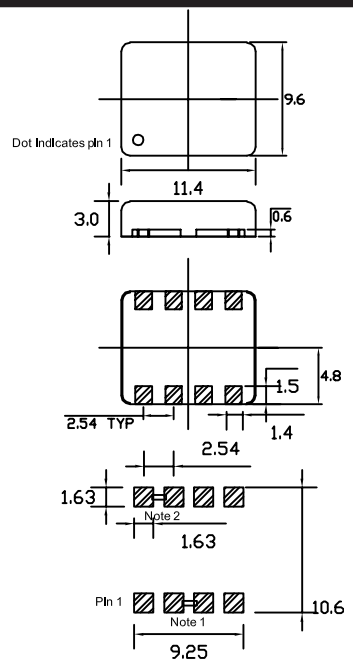

Recommended solder pad layout

PIN FUNCTION
PIN 1 OE
PIN 2 CONNECT TO PIN 3
PIN 3 CONNECT TO PIN 2
PIN 4 GND
PIN 5 PECL-
PIN 6 PECL+
PIN 7 VDD
PIN 8 VDD

Note 1: Connect pin 2 to pin 3
Note 2: Connect pin 7 to pin 8

LEVELS TEST CIRCUIT

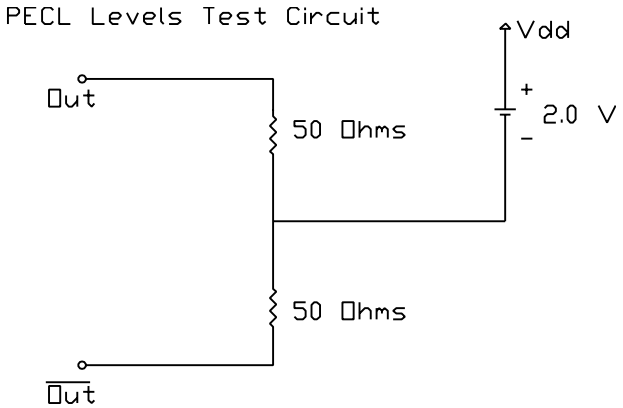

OUTPUT SKEW

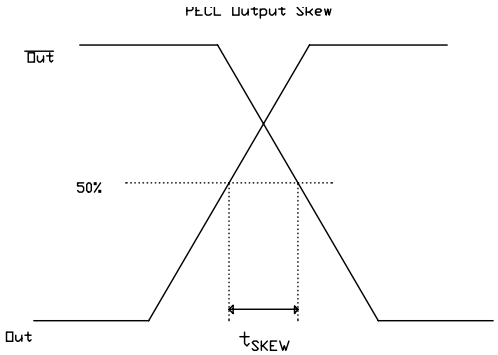

Programmable LVPECL Oscillator

Series CPPE7

* LVPECL Output
* Field Programmable
* Industry Standard Packaging

Applications

* Serial Communications
* Routers
* Switches
* WAN Interfaces
* Test Equipment

Pb RoHS COMPLIANT 2002 / 95 / EC

Part Numbering Example: CPPE7Z-A7BR-Freq.

CPP	E	7	Z	A7	BR	XX.XXXX
SERIES	OUTPUT	PACKAGE STYLE	ADDED FEATURES	OPERATING TEMP.	STABILITY	FREQUENCY
CPP	E = LVPECL	7 = 5X7 Ceramic	Blank = Bulk T = Tube Z = Tape and Reel	Blank = - 0°C + 70°C A5 = - 20°C + 70°C A7 = - 40°C + 85°C	B6 = ±100 ppm BP = ±50 ppm BR = ±25 ppm	1 ~ 200 MHz

Specifications:	Min	Typ	Max	Unit
Frequency Range:	1		200	MHz
Stability:	-25		+ 25	ppm
Supply Voltage:	3.125	3.3	3.465	V
Operating Temperature:	-40		+ 85	°C
Storage Temperature:	-55		+ 125	°C
Duty Cycle:	45		55	%
Start-Up Time:		3	10	mS
Aging: (ppm/1st Year) Ta=25C, Vdd=3.3V			5	ppm
Static Discharge Voltage:	2000			V
Supply Current:		80	100	mA
Short Circuit Current:		± 50		mA
Jitter (RMS) Period:		6	10	pS
Output Voltage Voh Vol	 Vdd - 1.025 		 Vdd - 1.62	 V V
Rise/Fall Time:		0.6	1.5	nS
Output Level:		LVPECL		
Packaging:		Tape and Reel 1000 pcs per Reel		

LVPECL Levels Test Circuit

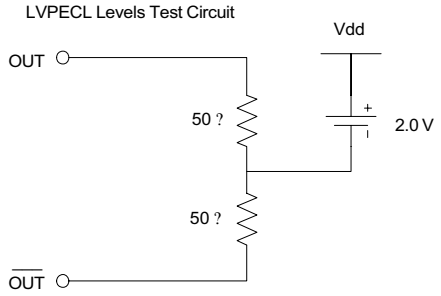

Tristate internal pull up, output active when high

Dimensions are in mm

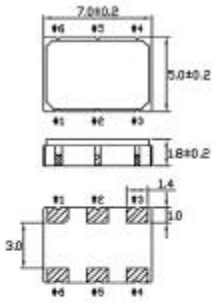

PIN Function
1 OE (CMOS)
2 Do Not Connect
3 Ground
4 LVPECL +
5 LVPECL -
6 Vdd

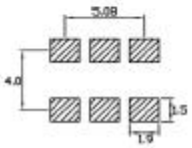

Solder Pad Layout

Cardinal Components, Inc.
155 Route 46 West
Wayne, NJ 07470
Rev: C-090414-11

TEL: (973)785-1333
E-MAIL: sales@cardinalxtal.com
WEB: http://www.cardinalxtal.com

Surface Mount TCXO

Series CT4S

- *Industry standard footprint*
- *2.5 mm max. height*
- *Low power consumption*

Pb RoHS COMPLIANT 2002 / 95 / EC

Part Numbering Example: CT4S L Z - A3 B3 - 15.360

CT4S	L	Z	A3	B3	15.360
SERIES	VOLTAGE	PACKAGING OPTIONS	OPERATING TEMP.	STABILITY	FREQUENCY
CT4S	Blank = 5V L = 3.3V E = 3.0V	Z = Tape and Reel	A1 = -10°C ~+50°C A2 = -10°C ~+60°C A3 = -30°C ~+75°C A4 = 40°C ~+75°C	B3 = ±2.5 ppm B5 = ±1.5 ppm	

Specifications:

Frequency Range:	9.600 MHz to 32.000 MHz
Available Stability Options:	±2.5 ppm ±1.5 ppm
Output Series:	Clipped Sine
Input Voltage:	+5.0 VDC ±5% +3.3 VDC ±5% +3.0 VDC ±5%
Operating Temperature Range Options:	-30°C to +75°C -20°C to +70°C
Output Voltage:	1.0 Volt Peak to Peak Minimum (+5 VDC Input) 0.8 VOLT Peak to Peak Minimum (+3 VDC Input)
Frequency Trim Range With Externally Adjustable Trimmer:	±3.0 ppm Minimum
Output Load:	10K OHM Parallel with 10 pf
Maximum Input Current:	2.0 mA (9.600 to 19.999 MHz) 3.0 mA (20.000 to 32.000 MHz)
Maximum Frequency Aging at +25°C:	±1 ppm/yr
Freq. Stability Vs. Change of Input Voltage of ±5%:	±0.3 ppm
Storage Temperature:	-40°C to +85°C
Packaging:	Tape and Reel (1K per Reel)

CT4S

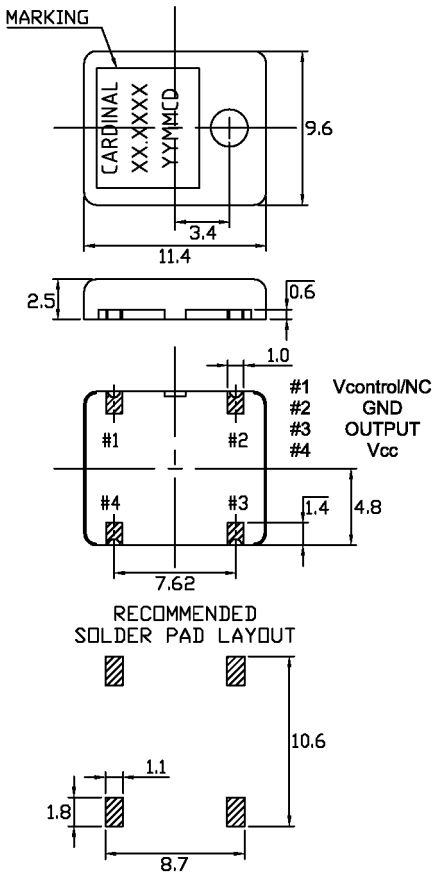

Cardinal Components, Inc.
155 Route 46 West
Wayne, NJ 07470

TEL: (973)785-1333
E-MAIL: sales@cardinalxtal.com
WEB: http://www.cardinalxtal.com

Field Programmable Blank Oscillator

Series CPP

- ***Programmed with the PG-3000, PG-3100 field oscillator programming instrument within seconds***
- ***Can be programmed twice***
- ***Standard Package Options***

Electrical Characteristics

Description	Test Conditions	Min	Typ	Max	Unit
Input Characteristics (Pin 1):					
V_{IL}, Low–Level Input Voltage	4.5–5.5V Vdd			0.8	V
TO DISABLE OUTPUT	3.0–3.6V Vdd			0.2Vdd	V
V_{IH}, High–Level Input Voltage	4.5–5.5V Vdd	2.0			V
TO ENABLE OUTPUT Or OPEN	3.0–3.6V Vdd	0.7			
I_{IL}, Input Low Current	V_{IN} = 0V			10	µA
I_{IH}, Input High Current	V_{IN} =Vdd			5	µA
Output Characteristics:					
V_{OL}, Low–Level Output Voltage	4.5V–5.5V Vdd, 16 mA I_{OL}			0.4	V
	3.0V–3.6V Vdd, 8 mA I_{OL}			0.4	V
V_{OHTTL}, High-level Output Voltage TTL	4.5V–5.5V Vdd, -16 mA I_{OL}	2.4			V
V_{OHCMOS}, High-level CMOS Voltage	4.5V–5.5V Vdd, -16 mA I_{OL}	Vdd-0.4			V
	3.0V–3.6V Vdd, -8 mA I_{OL}	Vdd-0.4			V
Power Supply Current: (unloaded)	4.5–5.5 Vdd, Output Freq ≤ 133 MHz			45	mA
	3.0–3.6 Vdd, Output Freq ≤ 100 MHz			25	mA
Standby Current:			10	50	µA
Pull-Up (Pin 1)	4.5–5.5 Vdd, V_{IN} = 0V	1.1	3.0	8.0	MΩ
	4.5–5.5 Vdd, V_{IN} = 0.7V	50	100	200	KΩ
Tri-State Leakage Current	5.0 Vdd		20		µA
Output Enable Mode:	Output is Tri-Stated				
Power Down Mode:	Output is Tri-Stated.				

Cardinal Components, Inc.
155 Route 46 West
Wayne, NJ 07470

TEL: (973)785-1333
E-MAIL: sales@cardinalxtal.com
WEB: http://www.cardinalxtal.com

Field Programmable Blank Oscillator

Series CPP

- ***Programmed with the PG-3000, PG-3100 field oscillator programming instrument within seconds***
- ***Can be programmed twice***
- ***Standard Package Options***

Output Clock Switching Characteristics

Description	Test Conditions	Min	Typ	Max	Unit
Duty Cycle:					
TTL @ 1.4 V	≤ 50 MHz, C_L = 50 pF	45		55	%
4.5-5.5 Vdd	50–66 MHz, C_L = 15 pF	45		55	%
	66–125 MHz, C_L = 25 pF	40		60	%
	125–133 MHz, C_L = 15 pF	40		60	%
Duty Cycle:	≤ 66 MHz, C_L ≤ 25 pF	45		55	%
CMOS @ Vdd/2	66–125 MHz, C_L ≤ 25 pF	40		60	%
4.5-5.5 Vdd	125–133 MHz, C_L ≤ 15 pF	40		60	%
3.0–3.6 Vdd	≤ 40 MHz, C_L ≤ 30 pF	45		55	%
	40-100 MHz, C_L ≤ 15 pF	40		60	%
Output Clock Rise/Fall					
	0.8V–2.0V, 4.5-5.5 Vdd, C_L = 50			1.8	ns
	0.8V–2.0V, 4.5-5.5 Vdd, C_L = 25			1.2	ns
	0.8V–2.0V, 4.5-5.5 Vdd, C_L = 15			0.9	ns
	0.2–0.8Vdd, 4.5-5.5 Vdd, C_L = 50			3.4	ns
	0.2–0.8Vdd, 3.0–3.6 Vdd, C_L = 30			4.0	ns
	0.2–0.8Vdd, 3.0–3.6 Vdd, C_L = 15			2.4	ns
Start Up Time	From power on			2	ms
Power Down Delay Time					
Synchronous	PWR_DWN pin LOW to output Hi-Z		T/2	T+10	ns
Asynchronous			10	15	ns
Output Disable Time					
Synchronous	OE pin LOW to output Hi-Z		T/2	T+10	ns
Asynchronous	T = Frequency oscillator period		10	15	ns
Output Enable Time				100	ns
	≤ 33.000 MHz		40	50	ps
RMS Period Jitter:	> 33.000, MHz		30	40	ps
Peak to Peak *	≤ 33.000 MHz		100	250	ps
	> 33.000 MHz		75	175	ps

* Jitter tested at > 1,000,000 samples, exceeding JEDEC std JESD65.

Field Programmable Blank Oscillator

Note: ***Bypass*** Vdd ***to GND with a 0.01 µF capacitor***

Style 1 Full Size 14 Pin Dip

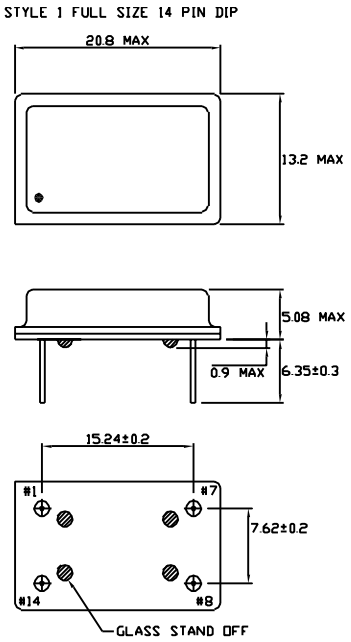

PIN FUNCTION
1 CONTROL
7 GND
8 OUTPUT
14 Vdd

Style 4 Half Size 8 Pin Dip

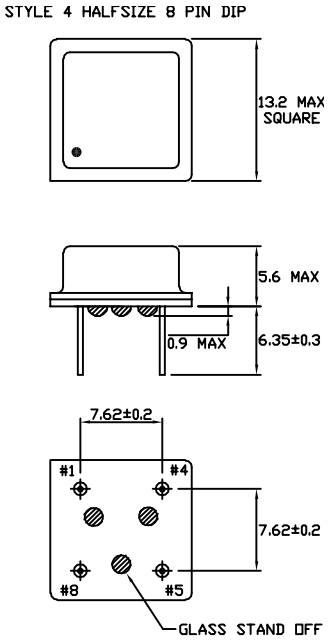

PIN FUNCTION
1 CONTROL
4 GND
5 OUTPUT
8 Vdd

Style 7 5x7 Ceramic SMD

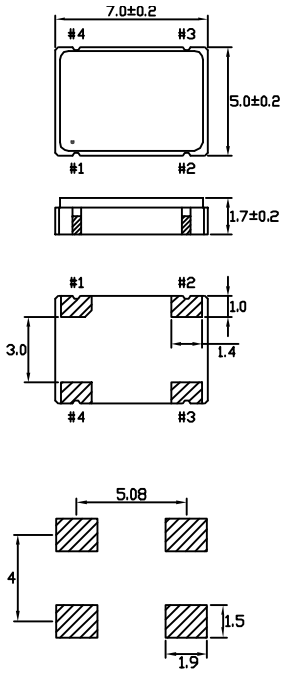

PIN FUNCTION
1 CONTROL
2 GND
3 OUTPUT
4 Vdd

Style 8 Plastic SMD

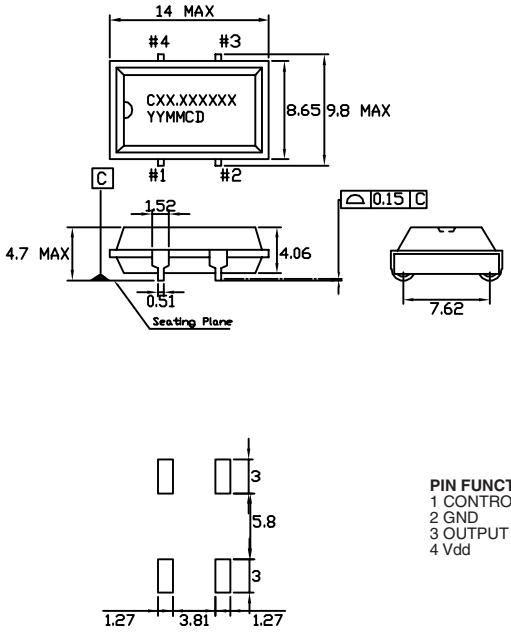

PIN FUNCTION
1 CONTROL
2 GND
3 OUTPUT
4 Vdd

Field Programmable Blank Oscillator

Note: ***Bypass*** Vdd ***to GND with a 0.01 µF capacitor***

Style 8B Plastic SMD

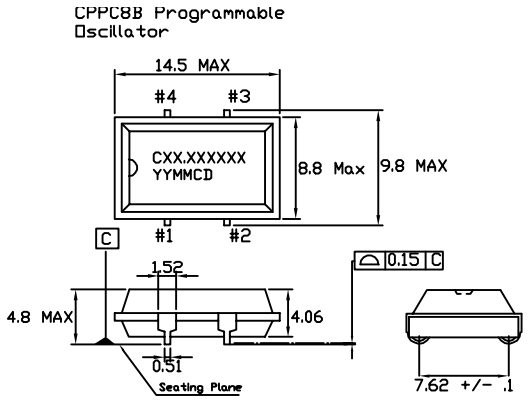

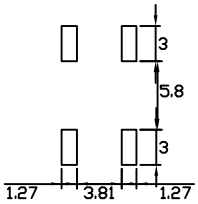

PIN FUNCTION
1 OE
2 GND
3 OUTPUT
4 Vdd

Style 5 3.2x5 Ceramic SMD

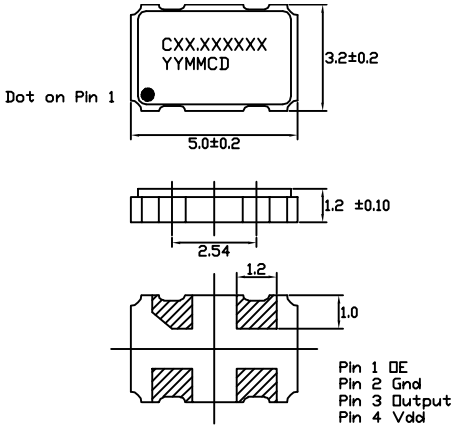

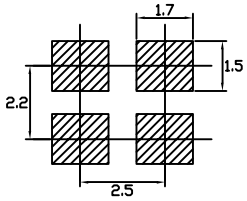

Recommended solder pad layout

Cardinal Components, Inc.
155 Route 46 West
Wayne, NJ 07470
Rev: C-090414-11

TEL: (973)785-1333
E-MAIL: sales@cardinalxtal.com
WEB: http://www.cardinalxtal.com

Field Programmable Blank Oscillator

Series CPPFX

- ***Programmed with the PG-2000P, PG-3000 field oscillator programming instrument within seconds***
- ***Can be programmed twice***
- ***Provides a sealed finished custom oscillator***
- ***Standard Package Options***

Pb RoHS COMPLIANT 2002 / 95 / EC

Part Numbering Example: CPPFX C 1 L Z - A5 BR - XX.XXXX TS

CPPFX	C	1	L	Z	A7	BR	XX.XXXX	TS
SERIES	**OUTPUT**	**PACKAGE STYLE**	**VOLTAGE**	**ADDED FEATURES**	**OPERATING TEMP.**	**STABILITY**	**FREQUENCY**	**TRI-STATE**
CPPFX	C = CMOS T = TTL	1 = Full Size 4 = Half Size 5 = 3.2X5 Ceramic 7 = 5X7 Ceramic 8 = PLASTIC SMD 8B = PLASTIC SMD	Blank = 5V L = 3.3 V R = 2.7 V	Blank = Bulk T = Tube Z = Tape and Reel	Blank = 0°C +70°C A7 = -40°C +85°C	BD = ±20 ppm BR = ±25 ppm	1.000~133.000 MHz	TS = Tri-State PD=PowerDwn

Specifications:

Description	Min	Typ	Max	Unit
Frequency Range: Programmable to Any Discrete Frequency	1.000		133.000	MHz
Available Stability Options:	-20 -25		20 25	ppm ppm
Programmable Supply Voltage:				
(1–133 MHz) (1–133 MHz)	4.5 3.0	5.0 3.3	5.5 3.6	V V
Operating Temperature Range Options:	0 -40		+70 +85	°C °C
Storage Temperature:	-55		+125	°C
Aging (PPM/Year) Ta=25C, Vdd=5/3.3V			±5	

Programmable Output Level: TTL/CMOS

Packaging: Tape and Reel (1K per Reel)
Tube

Operating Conditions:

	Description	Min	Max	Unit
Vdd	Supply Voltage	3.0	5.5	V
C_{TTL}	Max Capacitive Load on outputs for TTL levels			
	4.5V–5.5V Vdd ≤ 40 MHz		50	pF
	4.5V–5.5V Vdd > 40–133 MHz		25	pF
C_{CMOS}	Max Capacitive Load on outputs for CMOS levels			
	4.5V–5.5V Vdd, ≤ 66 MHz		50	pF
	4.5V–5.5V Vdd, >66–133 MHz		25	pF
	3.0V–3.6V Vdd, ≤ 40 MHz		30	pF
	3.0V–3.6V Vdd, >40–100 MHz		15	pF

Cardinal Components, Inc.
155 Route 46 West
Wayne, NJ 07470
Rev: C-090414-11

TEL: (973)785-1333
E-MAIL: sales@cardinalxtal.com
WEB: http://www.cardinalxtal.com

Field Programmable Blank Oscillator

Series CPPFX

- ***Programmed with the PG-2000P, PG-3000 field oscillator programming instrument within seconds***
- ***Can be programmed twice***
- ***Provides a sealed finished custom oscillator***

Electrical Characteristics

Description	Test Conditions	Min	Typ	Max	Unit
Input Characteristics (Pin 1):					
V_{IL}, Low–Level Input Voltage	4.5–5.5V Vdd			0.8	V
TO TRI-STATE OR POWER DOWN	3.0–3.6V Vdd			0.2Vdd	V
V_{IH}, High–Level Input Voltage	4.5–5.5V Vdd	2.0			V
TO ENABLE OUTPUT OR OPEN	T3.0–3.6V Vdd	0.7VddV			
I_{IL}, Input Low Current	V_{IN} = 0V			10	µA
I_{IH}, Input High Current	V_{IN} =Vdd			5	µA
Output Characteristics:					
V_{OL}, Low–Level Output Voltage	4.5V–5.5V Vdd, 16 mA I_{OL}			0.4	V
	3.0V–3.6V Vdd, 8 mA I_{OL}			0.4	V
V_{OHTTL}, High-level Output Voltage TTL	4.5V–5.5V Vdd, -16 mA I_{OL}	2.4			V
V_{OHCMOS}, High-level CMOS Voltage	4.5V–5.5V Vdd, -16 mA I_{OL}	Vdd-0.4			V
	3.0V–3.6V Vdd, -8 mA I_{OL}	Vdd-0.4			V
Power Supply Current: (unloaded)	4.5–5.5 Vdd, Output Freq ≤ 133 MHz			45	mA
	3.0–3.6 Vdd, Output Freq ≤ 100 MHz			25	mA
Standby Current:			10	50	µA
Tri State pull up (Pin1)	4.5–5.5 Vdd, V_{IN} = 0V	1.1	3.0	8.0	MΩ
	4.5–5.5 Vdd, V_{IN} = 0.7V	50	100	200	KΩ
Tri-State Leakage Current	5.0 Vdd		20		µA
Output Enable Mode:	Output is Tri-Stated				
Power Down Mode:	Output is Tri-Stated.				

"Tristate internal pull up. Output active when high"

TEL: (973)785-1333
E-MAIL: sales@cardinalxtal.com
WEB: http://www.cardinalxtal.com

Field Programmable Blank Oscillator

Series CPPFX

- ***Programmed with the PG-2000P, PG-3000 field oscillator programming instrument within seconds***
- ***Can be programmed twice***
- ***Provides a sealed finished custom oscillator***

Output Clock Switching Characteristics

Description	Test Conditions	Min	Typ	Max	Unit
Duty Cycle:					
TTL @ 1.4 V	≤ 50 MHz, C_L = 50 pF	45		55	%
4.5-5.5 Vdd	50–66 MHz, C_L = 15 pF	45		55	%
	66–125 MHz, C_L = 25 pF	40		60	%
	125–133 MHz, C_L = 15 pF	40		60	%
Duty Cycle:	≤ 66 MHz, C_L ≤ 25 pF	45		55	%
CMOS @ Vdd/2	66–125 MHz, C_L ≤ 25 pF	40		60	%
4.5-5.5 Vdd	125–133 MHz, C_L ≤ 15 pF	40		60	%
3.0–3.6 Vdd	≤ 40 MHz, C_L ≤ 30 pF	45		55	%
	40-100 MHz, C_L ≤ 15 pF	40		60	%
Output Clock Rise/Fall					
	0.8V–2.0V, 4.5-5.5 Vdd, C_L = 50			1.8	ns
	0.8V–2.0V, 4.5-5.5 Vdd, C_L = 25			1.2	ns
	0.8V–2.0V, 4.5-5.5 Vdd, C_L = 15			0.9	ns
	0.2–0.8Vdd, 4.5-5.5 Vdd, C_L = 50			3.4	ns
	0.2–0.8Vdd, 3.0–3.6 Vdd, C_L = 30			4.0	ns
	0.2–0.8Vdd, 3.0–3.6 Vdd, C_L = 15			2.4	ns
Start Up Time	From power on			10	ms
Power Down Delay Time					
Synchronous	PWR_DWN pin LOW to output Hi-Z		T/2	T+10	ns
Asynchronous			10	15	ns
Output Disable Time					
Synchronous	OE pin LOW to output Hi-Z		T/2	T+10	ns
Asynchronous	T = Frequency oscillator period		10	15	ns
Output Enable Time				100	n
	≤ 33.000 MHz		11	13	ps
RMS Period Jitter:	> 33.000, MHz		8	11	ps
Peak to Peak	≤ 33.000 MHz		80	110	ps
	> 33.000 MHz		65	80	ps

Field Programmable Blank Oscillator

Note: ***Bypass*** Vdd ***to GND with a 0.01 µF capacitor***

Style 1 Full Size 14 Pin Dip

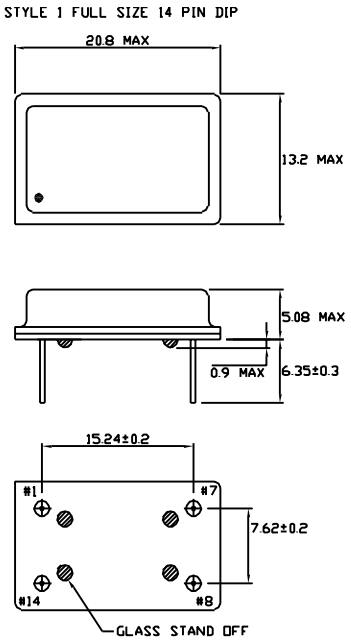

PIN FUNCTION
1 CONTROL
7 GND
8 OUTPUT
14 Vdd

Style 4 Half Size 8 Pin Dip

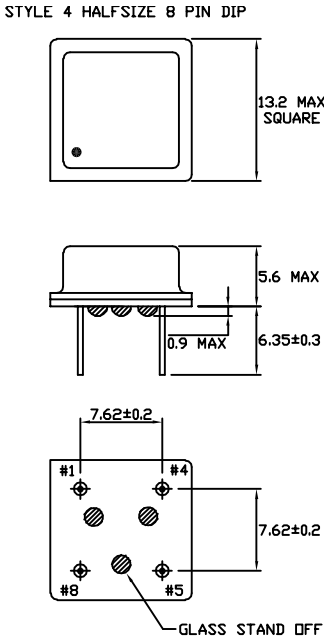

PIN FUNCTION
1 CONTROL
4 GND
5 OUTPUT
8 Vdd

Style 7 5x7 Ceramic SMD

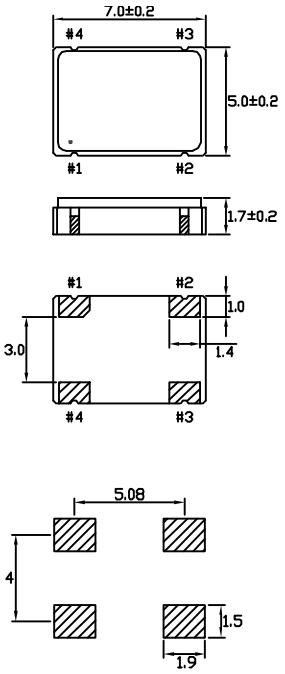

PIN FUNCTION
1 CONTROL
2 GND
3 OUTPUT
4 Vdd

Style 8 Plastic SMD

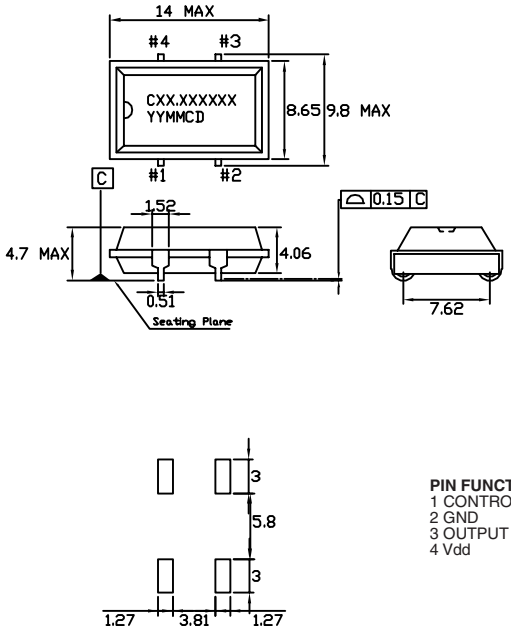

PIN FUNCTION
1 CONTROL
2 GND
3 OUTPUT
4 Vdd

Field Programmable Blank Oscillator

Note: ***Bypass*** Vdd ***to GND with a 0.01 µF capacitor***

Style 8B Plastic SMD

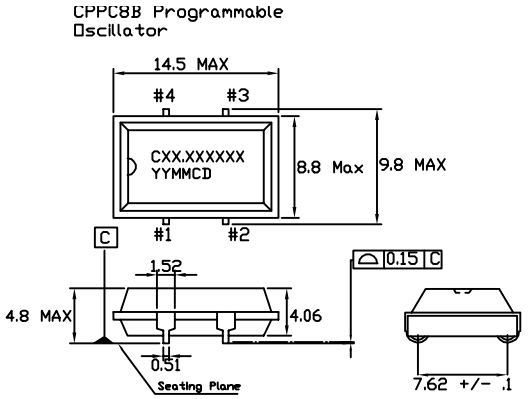

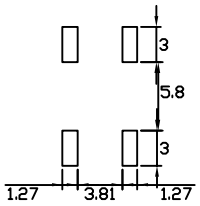

PIN FUNCTION
1 OE
2 GND
3 OUTPUT
4 Vdd

Style 5 3.2x5 Ceramic SMD

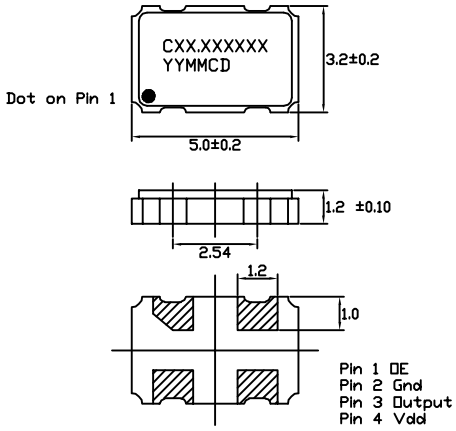

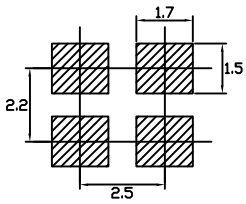

Recommended solder pad layout

Cardinal Components, Inc.
155 Route 46 West
Wayne, NJ 07470
Rev: C-090414-11

TEL: (973)785-1333
E-MAIL: sales@cardinalxtal.com
WEB: http://www.cardinalxtal.com

Dual Field Programmable Blank Oscillator

Series CPPD

- ***Programmed on the fly with the PG-3000 field oscillator programming instrument within seconds***
- ***Full Programming available for each frequency***
- ***Provides a sealed finished custom oscillator***
- ***Standard Package Options***
- *The dual FIPO contains a frequency select function. For example, consumer products often require different electrical standards around the world. Ex: Converting PAL to NTSC by changing FS line or modem real-time switching between transmit and receive frequencies*

Pb RoHS COMPLIANT 2002 / 95 / EC

Part Numbering Example: CPPD C 1 L Z - A5 B6 - XX.XXXX / YY.YYYY

CPPD	C	1	L	Z	A5	B6	XX.XXXX	YY.YYYY
SERIES	**OUTPUT**	**PACKAGE STYLE**	**VOLTAGE**	**ADDED FEATURES**	**OPERATING TEMP.**	**STABILITY**	**FREQ. F0**	**FREQ. F1**
CPPD	C = CMOS T = TTL	1 = Full Size 4 = Half Size 5 = 3.2X5 Ceramic 7 = 5X7 Ceramic 8 = PLASTIC SMD 8B = PLASTIC SMD	Blank = 5V L = 3.3 V R = 2.7 V	Blank = Bulk T = Tube Z = Tape and Reel	Blank = 0°C +70°C A5 = -20°C +70°C A7 = -40°C +85°C	B6 = ±100 ppm BP = ±50 ppm BR = ±25 ppm	1.000~133.000 MHz PIN 1 Logic "0"	1.000~133.000 MHz PIN 1 Logic "1"

Specifications:

Description	Min	Typ	Max	Unit
Frequency Range: Programmable to Any Discrete Frequency	1.000		133.000	MHz
Available Stability Options:	-100 -50 -25		100 50 25	ppm ppm ppm
Programmable Input Voltage: (1–133 MHz) (1–100 MHz) (1-66 MHz)	 4.5 3.0 2.5	 5.0 3.3 2.7	 5.5 3.6 3.0	 V V V
Operating Temperature Range Options:	0 -20 -40		+70 +70 +85	°C °C °C
Storage Temperature:	-55		+125	°C
Aging (PPM/1st Year) Ta=25C, Vdd=5/3.3V PPM/Year (after 1st year)			±5 ±1	

Programmable Output Level: TTL/CMOS

Packaging: Tape and Reel (1K per Reel)
Tube
Bulk

Operating Conditions:

	Description	Min	Max	Unit
Vdd	Supply Voltage	3.0	5.5	V
C_{TTL}	Max Capacitive Load on outputs for TTL levels 4.5V–5.5V Vdd ≤ 40 MHz 4.5V–5.5V Vdd > 40–133 MHz		 50 25	 pF pF
C_{CMOS}	Max Capacitive Load on outputs for CMOS levels 4.5V–5.5V Vdd, ≤ 66 MHz 4.5V–5.5V Vdd, 66–133 MHz 3.0V–3.6V Vdd, ≤ 40 MHz 3.0V–3.6V Vdd, 40–100 MHz 2.5V-3.0V Vdd, ≤ 66 MHz		 50 25 30 15 25	 pF pF pF pF pF

Cardinal Components, Inc.
155 Route 46 West
Wayne, NJ 07470
Rev: C-090414-11

TEL: (973)785-1333
E-MAIL: sales@cardinalxtal.com
WEB: http://www.cardinalxtal.com

Dual Field Programmable Blank Oscillator

Series CPPD

- ***Programmed on the fly with the PG-3000 field oscillator programming instrument within seconds***
- ***Full Programming available for each frequency***
- ***Provides a sealed finished custom oscillator***

Electrical Characteristics

Description	Test Conditions	Min	Typ	Max	Unit	
Input Characteristics (Pin 1):						
Control Pin	4.5–5.5V Vdd				0.8	V
V_{IL}, Low–Level Input Voltage	3.0–3.6V Vdd				0.2Vdd	V
To switch to F0 output	2.5-3.0V Vdd				0.2Vdd	V
V_{IH}, High–Level Input Voltage	4.5–5.5V Vdd		2.0			V
To switch to F1 output	3.0–3.6V Vdd		0.7Vdd			V
	2.5-3.0V Vdd		0.7Vdd			V
I_{IL}, Input Low Current	V_{IN} = 0V				10	µA
I_{IH}, Input High Current	V_{IN} =Vdd				5	µA
Output Characteristics:						
V_{OL}, Low–Level Output Voltage	4.5V–5.5V Vdd, 16 mA I_{OL}				0.40	V
	3.0V–3.6V Vdd, 8 mA I_{OL}				0.4	V
V_{OHTTL}, High-level Output Voltage TTL	4.5V–5.5V Vdd, -16 mA I_{OL}		2.4			V
V_{OHCMOS}, High-level CMOS Voltage	4.5V–5.5V Vdd, -16 mA I_{OL}		Vdd-0.4			V
	3.0V–3.6V Vdd, -8 mA I_{OL}		Vdd-0.4			V
	2.5-3.0V V_{DD}, 6mA		Vdd-0.4			V
Power Supply Current: (unloaded)	4.5–5.5 Vdd, Output Freq ≤ 133 MHz				45	mA
	3.0–3.6 Vdd, Output Freq ≤ 100 MHz				25	mA
	2.5-3.0 Vdd, Output Freq ≤ 66 MHz				20	mA
Input Pull-Up Resistor (Pin 1)	4.5–5.5 Vdd, V_{IN} = 0V		1.1	3.0	8.0	MΩ
	4.5–5.5 Vdd, V_{IN} = 0.7V		50	100	200	KΩ
Frequency Select Switching Time					500	µs

Cardinal Components, Inc.
155 Route 46 West
Wayne, NJ 07470

TEL: (973)785-1333
E-MAIL: sales@cardinalxtal.com
WEB: http://www.cardinalxtal.com

Dual Field Programmable Blank Oscillator

Series CPPD

- ***Programmed on the fly with the PG-3000 field oscillator programming instrument within seconds***
- ***Full Programming available for each frequency***
- ***Provides a sealed finished custom oscillator***

Output Clock Switching Characteristics

Description	Test Conditions	Min	Typ	Max	Unit
Duty Cycle:					
TTL @ 1.4 V	≤ 50 MHz, C_L = 50 pF	45		55	%
4.5-5.5 Vdd	50–66 MHz, C_L = 15 pF	45		55	%
	66–125 MHz, C_L = 25 pF	40		60	%
	125–133 MHz, C_L = 15 pF	40		60	%
Duty Cycle:	≤ 66 MHz, C_L ≤ 25 pF	45		55	%
CMOS @ Vdd/2	66–125 MHz, C_L ≤ 25 pF	40		60	%
4.5-5.5 Vdd	125–133 MHz, C_L ≤ 15 pF	40		60	%
3.0–3.6 Vdd	≤ 40 MHz, C_L ≤ 30 pF	45		55	%
	40-100 MHz, C_L ≤ 15 pF	40		60	%
Output Clock Rise/Fall					
	0.8V–2.0V, 4.5-5.5 Vdd, C_L = 50			1.8	ns
	0.8V–2.0V, 4.5-5.5 Vdd, C_L = 25			1.2	ns
	0.8V–2.0V, 4.5-5.5 Vdd, C_L = 15			0.9	ns
	0.2–0.8Vdd, 4.5-5.5 Vdd, C_L = 50			3.4	ns
	0.2–0.8Vdd, 3.0–3.6 Vdd, C_L = 30			4.0	ns
	0.2–0.8Vdd, 3.0–3.6 Vdd, C_L = 15			2.4	ns
Start Up Time	From power on			10	ms
RMS Period Jitter:	1 – 133 MHz		8	11	ps
Peak to Peak *	≤ 33.000 MHz		65	99	ps
	> 33.000 MHz		65	80	ps

* Jitter tested at > 1,000,000 samples, exceeding JEDEC std JESD65.

Cardinal Components, Inc.
155 Route 46 West
Wayne, NJ 07470

TEL: (973)785-1333
E-MAIL: sales@cardinalxtal.com
WEB: http://www.cardinalxtal.com

Field Programmable Blank Oscillator

Note: ***Bypass*** Vdd ***to GND with a 0.01 µF capacitor***

Style 1 Full Size 14 Pin Dip

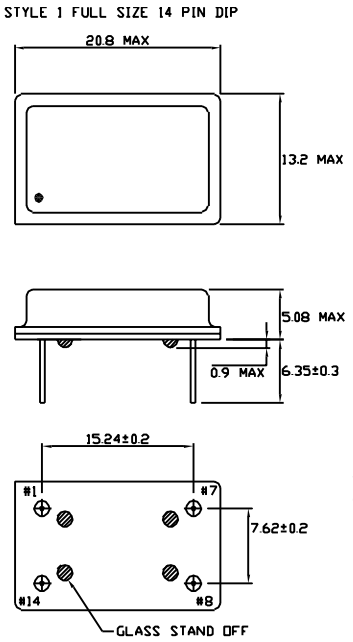

PIN FUNCTION
1 NC/CONTROL
7 FS
8 OUTPUT
14 Vdd

Style 4 Half Size 8 Pin Dip

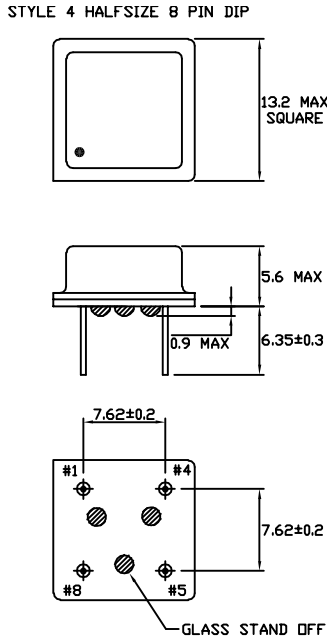

PIN FUNCTION
1 FS
4 GND
5 OUTPUT
8 Vdd

Style 7 5x7 Ceramic SMD

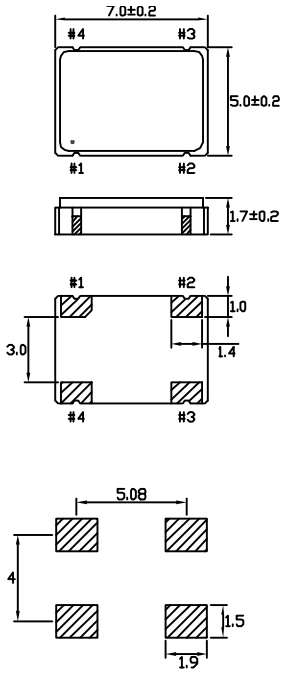

PIN FUNCTION
1 FS
2 GND
3 OUTPUT
4 Vdd

Style 8 Plastic SMD

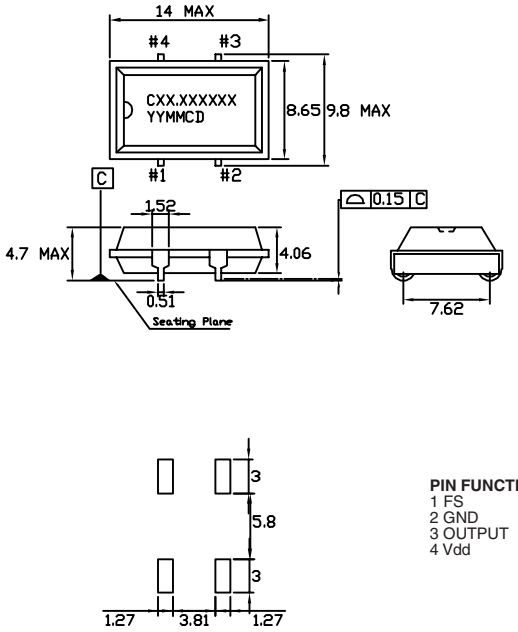

PIN FUNCTION
1 FS
2 GND
3 OUTPUT
4 Vdd

Field Programmable Blank Oscillator

Note: ***Bypass*** Vdd ***to GND with a 0.01 µF capacitor***

Style 8B Plastic SMD

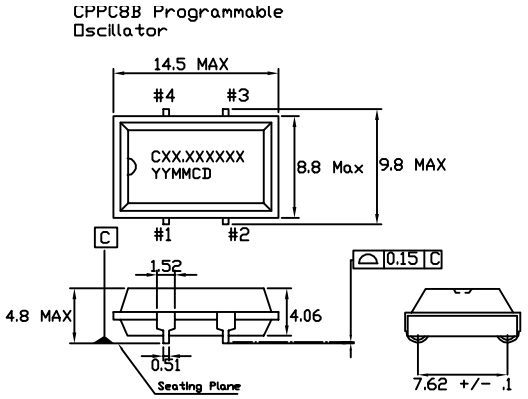

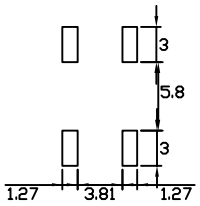

PIN FUNCTION
1 OE
2 GND
3 OUTPUT
4 Vdd

Style 5 3.2x5 Ceramic SMD

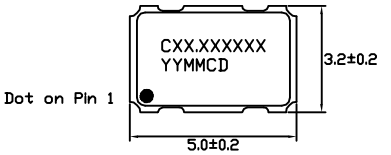

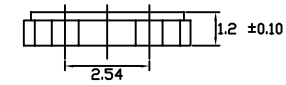

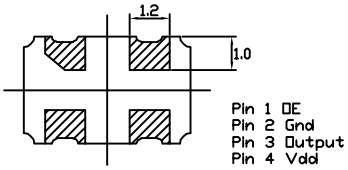

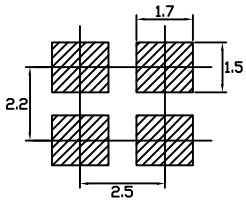

Recommended solder pad layout

Cardinal Components, Inc.
155 Route 46 West
Wayne, NJ 07470
Rev: C-090414-11

TEL: **(973)785-1333**
E-MAIL: **sales@cardinalxtal.com**
WEB: **http://www.cardinalxtal.com**

Field Programmable Blank Oscillator

Series CPPL

- ***Programmed with the PG-2000P, PG-3000 field oscillator programming instrument within seconds***
- ***Can be programmed twice***
- ***Provides a sealed finished custom oscillator***
- ***Standard Package Options***
- ***Ultra low jitter @ 1 million samples***
- ***Power down and Tri-State options***

Pb RoHS COMPLIANT 2002 / 95 / EC

Part Numbering Example: CPPL C 1 L Z - A5 B6 - XX.XXXX TS

CPPL	C	1	L	Z	A5	B6	XX.XXXX	TS
SERIES	**OUTPUT**	**PACKAGE STYLE**	**VOLTAGE**	**ADDED FEATURES**	**OPERATING TEMP.**	**STABILITY**	**FREQUENCY**	**TRI-STATE**
CPPL	C = CMOS T = TTL	1 = Full Size 4 = Half Size 5 = 3.2X5 Ceramic 7 = 5X7 Ceramic 8 = PLASTIC SMD 8B = PLASTIC SMD	Blank = 5V L = 3.3 V	Blank = Bulk T = Tube Z = Tape and Reel	Blank = 0°C +70°C A5 = -20°C +70°C A7 = -40°C +85°C	B6 = ±100 ppm BP = ±50 ppm BR = ±25 ppm	1.000~133.000 MHz	TS = Tri-State PD=PowerDwn

Specifications:

Description	Min	Typ	Max	Unit
Frequency Range: Programmable to Any Discrete Frequency	1.000		133.000	MHz
Available Stability Options:	-100 -50 -25		100 50 25	ppm ppm ppm
Programmable Input Voltage: (1–133 MHz) (1–100 MHz)	 4.5 3.0	 5.0 3.3	 5.5 3.6	 V V
Operating Temperature Range Options:	0 -20 -40		+70 +70 +85	°C °C °C
Storage Temperature:	-55		+125	°C
Aging (PPM/Year) Ta=25C, Vdd=5/3.3V			±5	
Programmable Output Level:	TTL/CMOS			
Packaging:	Tape and Reel (1K per Reel) Tube Bulk Shipping			

Operating Load Conditions:

	Description	Min	Max	Unit
Vdd	Supply Voltage	3.0	5.5	V
C_{TTL}	Max Capacitive Load on outputs for TTL levels 4.5V–5.5V Vdd ≤ 40 MHz 4.5V–5.5V Vdd > 40–133 MHz		 50 25	 pF pF
C_{CMOS}	Max Capacitive Load on outputs for CMOS levels 4.5V–5.5V Vdd, ≤ 66 MHz 4.5V–5.5V Vdd, >66–133 MHz 3.0V–3.6V Vdd, ≤ 40 MHz 3.0V–3.6V Vdd, >40–100 MHz		 50 25 30 15	 pF pF pF pF

Cardinal Components, Inc.
155 Route 46 West
Wayne, NJ 07470

TEL: (973)785-1333
E-MAIL: sales@cardinalxtal.com
WEB: http://www.cardinalxtal.com

Field Programmable Blank Oscillator

Series CPPL

- ***Programmed with the PG-2000P, PG-3000 field oscillator programming instrument within seconds***
- ***Can be programmed twice***
- ***Provides a sealed finished custom oscillator***
- ***Ultra low jitter @ 1 million samples***

Electrical Characteristics

Description	Test Conditions	Min	Typ	Max	Unit
Input Characteristics (Pin 1):					
V_{IL}, Low–Level Input Voltage	4.5–5.5V Vdd			0.8	V
TO TRI-STATE OR POWER DOWN	3.0–3.6V Vdd			0.2Vdd	V
V_{IH}, High–Level Input Voltage	4.5–5.5V Vdd	2.0			V
TO ENABLE OUTPUT OR open	3.0–3.6V Vdd	0.7VddV			
I_{IL}, Input Low Current	V_{IN} = 0V			10	µA
I_{IH}, Input High Current	V_{IN} =Vdd			5	µA
Output Characteristics:					
V_{OL}, Low–Level Output Voltage	4.5V–5.5V Vdd, 16 mA I_{OL}			0.4	V
	3.0V–3.6V Vdd, 8 mA I_{OL}			0.4	V
V_{OHTTL}, High-level Output Voltage TTL	4.5V–5.5V Vdd, -16 mA I_{OL}	2.4			V
V_{OHCMOS}, High-level CMOS Voltage	4.5V–5.5V Vdd, -16 mA I_{OL}	Vdd-0.4			V
	3.0V–3.6V Vdd, -8 mA I_{OL}	Vdd-0.4			V
Power Supply Current: (unloaded)	4.5–5.5 Vdd, Output Freq ≤ 133 MHz			45	mA
	3.0–3.6 Vdd, Output Freq ≤ 100 MHz			25	mA
Standby Current:			10	50	µA
Tristate pull up	4.5–5.5 Vdd, V_{IN} = 0V	1.1	3.0	8.0	MΩ
	4.5–5.5 Vdd, V_{IN} = 0.7V	50	100	200	KΩ
Tri-State Leakage Current	5.0 Vdd		20		µA
Output Enable Mode:	Output is Tri-Stated				
Power Down Mode:	Output is Tri-Stated.				

"Tristate internal pull up. Output active when high"

Cardinal Components, Inc.
155 Route 46 West
Wayne, NJ 07470

TEL: (973)785-1333
E-MAIL: sales@cardinalxtal.com
WEB: http://www.cardinalxtal.com

Field Programmable Blank Oscillator

Series CPPL

- ***Programmed with the PG-2000P, PG-3000 field oscillator programming instrument within seconds***
- ***Can be programmed twice***
- ***Provides a sealed finished custom oscillator***
- ***Ultra low jitter @ 1 million samples***

Output Clock Switching Characteristics

Description	Test Conditions	Min	Typ	Max	Unit
Duty Cycle:					
TTL @ 1.4 V	≤ 50 MHz, C_L = 50 pF	45		55	%
4.5-5.5 Vdd	50–66 MHz, C_L = 15 pF	45		55	%
	66–125 MHz, C_L = 25 pF	40		60	%
	125–133 MHz, C_L = 15 pF	40		60	%
Duty Cycle:	≤ 66 MHz, C_L ≤ 25 pF	45		55	%
CMOS @ Vdd/2	66–125 MHz, C_L ≤ 25 pF	40		60	%
4.5-5.5 Vdd	125–133 MHz, C_L ≤ 15 pF	40		60	%
3.0–3.6 Vdd	≤ 40 MHz, C_L ≤ 30 pF	45		55	%
	40-100 MHz, C_L ≤ 15 pF	40		60	%
Output Clock Rise/Fall					
	0.8V–2.0V, 4.5-5.5 Vdd, C_L = 50			1.8	ns
	0.8V–2.0V, 4.5-5.5 Vdd, C_L = 25			1.2	ns
	0.8V–2.0V, 4.5-5.5 Vdd, C_L = 15			0.9	ns
	0.2–0.8Vdd, 4.5-5.5 Vdd, C_L = 50			3.4	ns
	0.2–0.8Vdd, 3.0–3.6 Vdd, C_L = 30			4.0	ns
	0.2–0.8Vdd, 3.0–3.6 Vdd, C_L = 15			2.4	ns
Start Up Time	From power on			2	ms
Power Down Delay Time					
Synchronous	PWR_DWN pin LOW to output Hi-Z		T/2	T+10	ns
Asynchronous			10	15	ns
Output Disable Time					
Synchronous	OE pin LOW to output Hi-Z		T/2	T+10	ns
Asynchronous	T = Frequency oscillator period		10	15	ns
Output Enable Time				100	ns
RMS Period Jitter:	1 – 133 MHz		8	11	ps
Peak to Peak *	≤ 33.000 MHz		65	99	ps
	> 33.000 MHz		65	80	ps

* Jitter tested at > 1,000,000 samples, exceeding JEDEC std JESD65.

Cardinal Components, Inc.
155 Route 46 West
Wayne, NJ 07470

TEL: (973)785-1333
E-MAIL: sales@cardinalxtal.com
WEB: http://www.cardinalxtal.com

Field Programmable Blank Oscillator

Note: ***Bypass*** Vdd ***to GND with a 0.01 µF capacitor***

Style 1 Full Size 14 Pin Dip

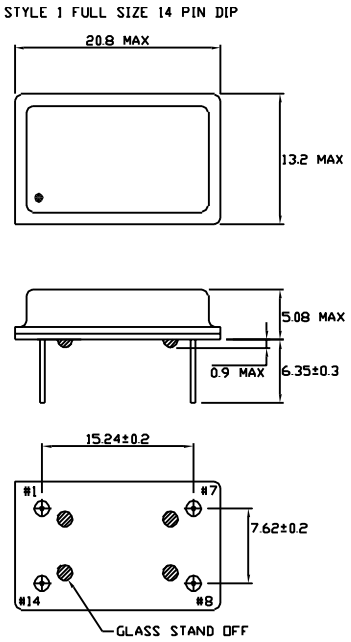

PIN FUNCTION
1 CONTROL
7 GND
8 OUTPUT
14 Vdd

Style 4 Half Size 8 Pin Dip

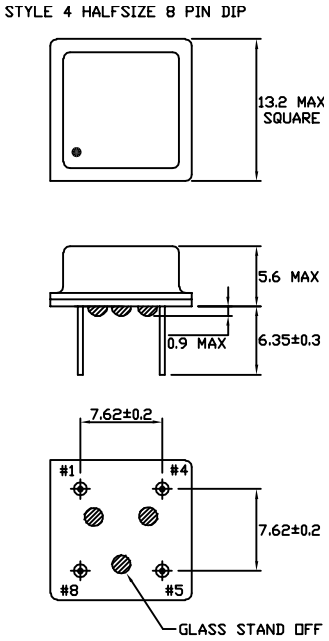

PIN FUNCTION
1 CONTROL
4 GND
5 OUTPUT
8 Vdd

Style 7 5x7 Ceramic SMD

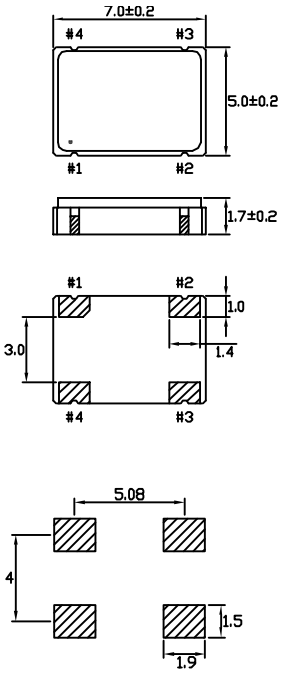

PIN FUNCTION
1 CONTROL
2 GND
3 OUTPUT
4 Vdd

Style 8 Plastic SMD

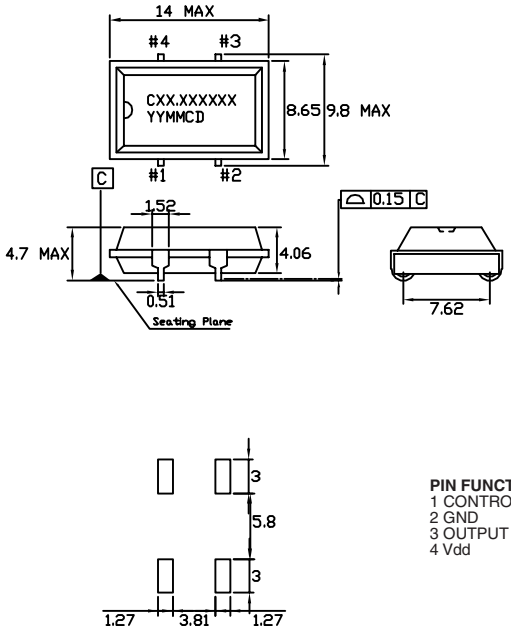

PIN FUNCTION
1 CONTROL
2 GND
3 OUTPUT
4 Vdd

Cardinal Components, Inc.
155 Route 46 West
Wayne, NJ 07470
Rev: C-090414-11

TEL: (973)785-1333
E-MAIL: sales@cardinalxtal.com
WEB: http://www.cardinalxtal.com

Field Programmable Blank Oscillator

Note: ***Bypass*** Vdd ***to GND with a 0.01 µF capacitor***

Style 8B Plastic SMD

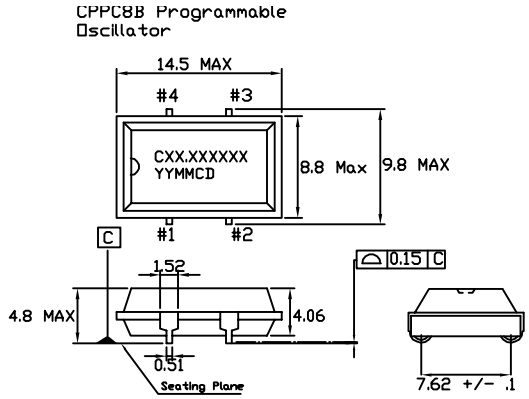

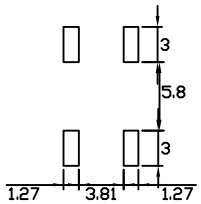

PIN FUNCTION
1 OE
2 GND
3 OUTPUT
4 Vdd

Style 5 3.2x5 Ceramic SMD

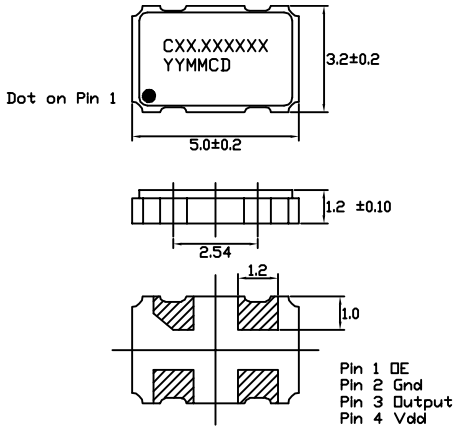

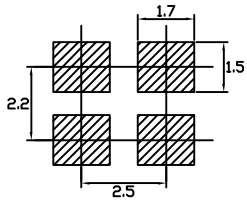

Recommended solder pad layout

Cardinal Components, Inc.
155 Route 46 West
Wayne, NJ 07470
Rev: C-090414-11

TEL: (973)785-1333
E-MAIL: sales@cardinalxtal.com
WEB: http://www.cardinalxtal.com

Crystal Clock Oscillator

Series CH11

- *50 pf load capable*
- *TTL and CMOS compatible*
- *3.3 VDC input available*
- *Optional tristate*

Pb RoHS COMPLIANT 2002 / 95 / EC

Part Numbering Example: CH11 00 4 L 45 - A2 - 50.0 TS

CH11	00	4	L	45	A2	50.0	TS
SERIES	**STABILITY**	**PACKAGE STYLE**	**VOLTAGE**	**SYMMETRY**	**OPERATING TEMP.**	**FREQUENCY**	
CH11	00 = ±100 ppm 50 = ± 50 ppm 25 = ± 25 ppm 10 = ± 10 ppm	1 = Full Size 3 = Full Size, Gull Wing 4 = Half Size 6 = Half Size, Gull Wing	Blank = 5V L = 3.3V	Blank = 40/60% 45 = 45/55%	Blank = 0°C ~ +70°C A2 =-40°C ~ +85°C		Blank = No Connection TS = Tristate, pin 1

Specifications:

Frequency Range:	1.8432 MHz to 100.000 MHz
Available Stability Options:	±100 ppm *Standard* ±50 ppm ±25 ppm ±10 ppm
Output Series:	TTL/CMOS
Input Voltage:	+5.0 VDC ±10% *Standard* +3.3 VDC ±10%
Operating Temperature Range Options:	-10°C to +70°C *Standard* -40°C to +85°C
Output Voltage:	HCMOS V_{OL} = 10% V_{DD} V Max. HCMOS V_{OH} = 90% V_{DD} V Min.
Output Load:	10 TTL, 50 pf CMOS
Maximum Input Current:	25 mA (1.8432 to 24.999 MHz) 45 mA (25.000 to 49.999 MHz) 70 mA (50.000 to 69.999 MHz) 80 mA (70.000 to 100.000 MHz)
Maximum Rise/Fall Time:	7 ns
Duty Cycle:	40/60% *Standard* 45/55%
Max. Start-Up Time:	10 ms
Tristate Input:	@+5 VDC Input +0.80 VDC Max. to Disable +3.60 VDC Min. to Enable or Open to Enable @+3.3 VDC Input +0.80 VDC Max. to Disable +2.20 VDC Min. to Enable or open to Enable
Storage Temperature:	-55°C to +125°C

OUTPUT WAVE FORM

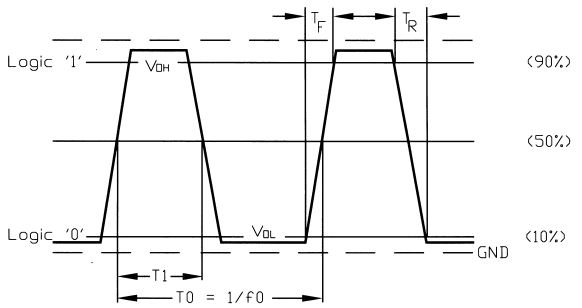

SYMMETRY = $(T_1/T_0) \times 100\%$

TEST CIRCUIT

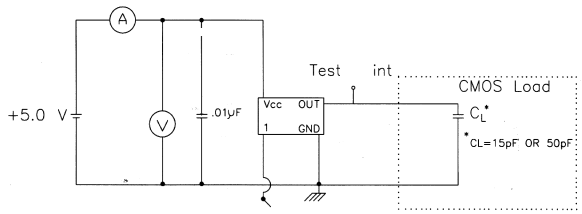

*Includes stray and probe capacitance (15pF TYP)

Cardinal Components, Inc.
155 Route 46 West
Wayne, NJ 07470
Rev: C-090414-11

TEL: (973)785-1333
E-MAIL: sales@cardinalxtal.com
WEB: http://www.cardinalxtal.com

Dip Oscillator Package Dimensions

Style 1 Full Size 14 Pin Dip

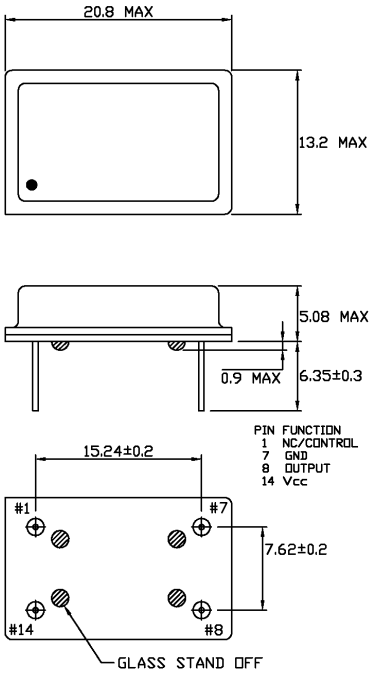

Style 3 Full Size 14 Pin Dip Gull Wing

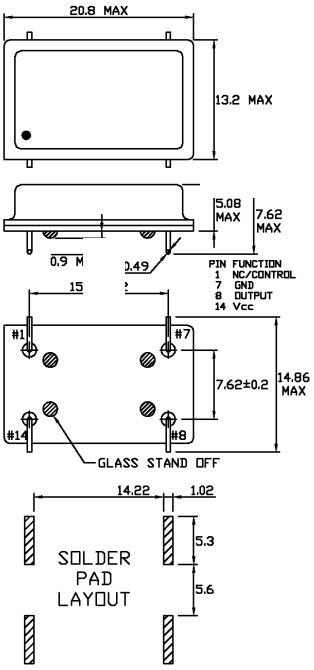

Style 4 Half Size 8 Pin Dip

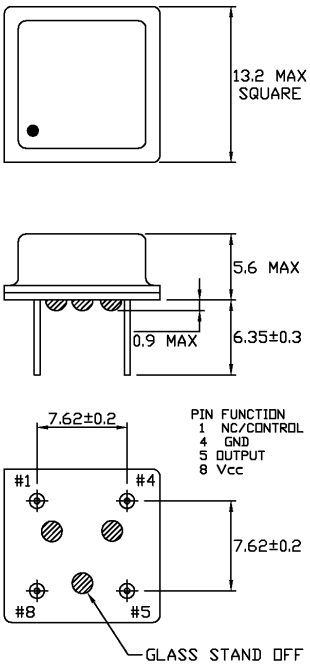

Style 6 Half Size 8 Pin Dip Gull Wing

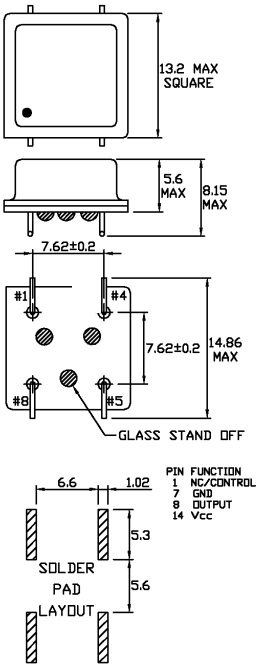

Cardinal Components, Inc.
155 Route 46 West
Wayne, NJ 07470
Rev: C-090414-11

TEL: (973)785-1333
E-MAIL: sales@cardinalxtal.com
WEB: http://www.cardinalxtal.com

Crystal Clock Oscillator

Series CTH11

- *Gull wings optional*
- *Optional tristate*
- *TTL and CMOS compatible*

Pb RoHS COMPLIANT 2002 / 95 / EC

Part Numbering Example: CTH11 00 4 L 45 - A2 - 50.0 TS L

CTH11	00	4	L	45	A2	50.0	TS
SERIES	**STABILITY**	**PACKAGE STYLE**	**VOLTAGE**	**SYMMETRY**	**OPERATING TEMP.**	**FREQUENCY**	
CTH11	00 = ±100 ppm 50 = ± 50 ppm 25 = ± 25 ppm 10 = ± 10 ppm	1 = Full Size 3 = Full Size, Gull Wing 4 = Half Size 6 = Half Size, Gull Wing	Blank = 5V L = 3.3V	Blank = 40/60% 45 = 45/55%	Blank = 0°C ~ +70°C A2=-40°C ~ +85°C		Blank = No Connection TS = Tristate, pin 1

Specifications:

Frequency Range:	1.000 MHz to 70.000 MHz
Available Stability Options:	±100 ppm *Standard* ±50 ppm ±25 ppm ±10 ppm
Output Series:	TTL/CMOS
Input Voltage:	+5.0 VDC ±10% +3.3 VDC ±10%
Operating Temperature Range Options:	-10°C to +70°C
Output Voltage:	HCMOS V_{OL} = 10% V_{DD} V Max. HCMOS V_{OH} = 90% V_{DD} V Min.
Output Load:	10 LS TTL, 15 pf CMOS
Maximum Input Current:	20 mA (1.000 to 24.999 MHz) 35 mA (25.000 to 49.999 MHz) 50 mA (50.000 to 70.000 MHz)
Maximum Rise/Fall Time:	10 ns (1.000 to 23.999 MHz) 6 ns (24.000 to 70.000 MHz)
Duty Cycle:	40/60% *Standard* 45/55%
Max. Start-Up Time:	10 ms
Tristate Input:	@+5 VDC Input +0.80 VDC Max. to Disable +3.60 VDC Min. to Enable or Open to Enable @+3.3 VDC Input +0.80 VDC Max. to Disable +2.20 VDC Min. to Enable or open to Enable
Storage Temperature:	-55°C to +125°C

OUTPUT WAVE FORM

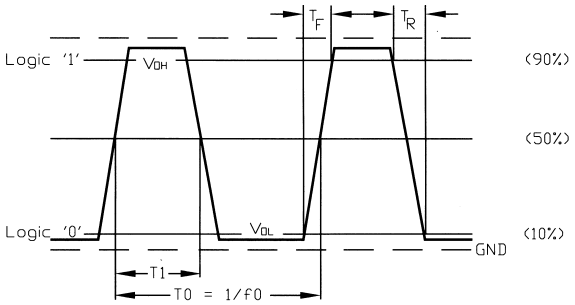

$$\text{SYMMETRY} = \left(\frac{T_1}{T_0}\right) \times 100\%$$

TEST CIRCUIT

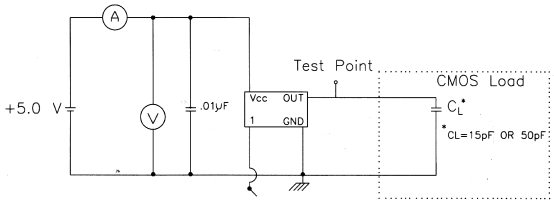

*Includes stray and probe capacitance (15pF TYP)

Cardinal Components, Inc.
155 Route 46 West
Wayne, NJ 07470
Rev: C-090414-11

TEL: (973)785-1333
E-MAIL: sales@cardinalxtal.com
WEB: http://www.cardinalxtal.com

Dip Oscillator Package Dimensions

Style 1 Full Size 14 Pin Dip

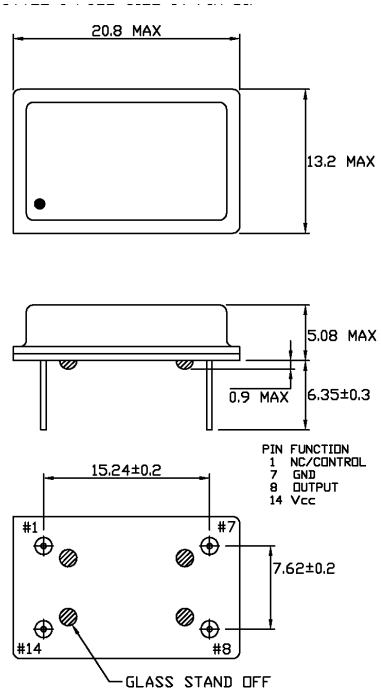

Style 3 Full Size 14 Pin Dip Gull Wing

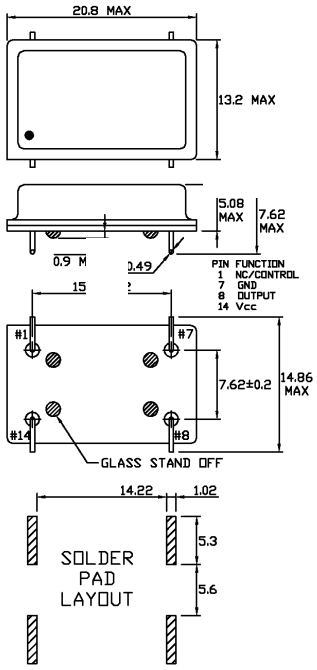

Style 4 Half Size 8 Pin Dip

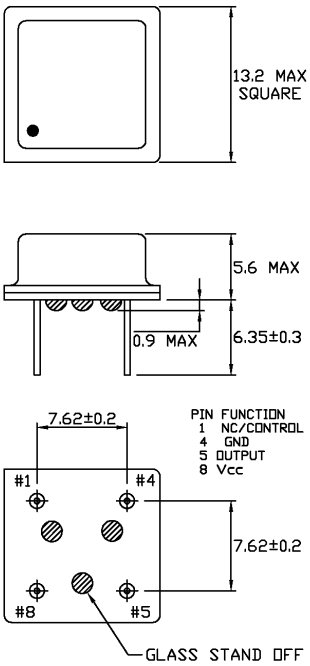

Style 6 Half Size 8 Pin Dip Gull Wing

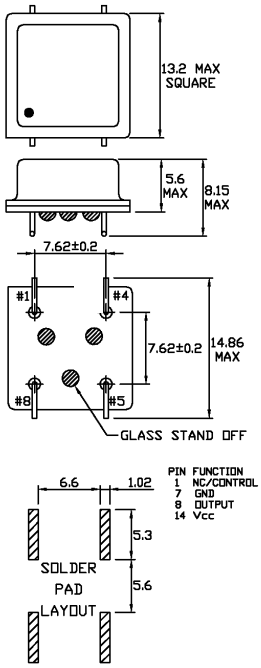

Cardinal Components, Inc.
155 Route 46 West
Wayne, NJ 07470
Rev: C-090414-11

TEL: (973)785-1333
E-MAIL: sales@cardinalxtal.com
WEB: http://www.cardinalxtal.com

Crystal Clock Oscillator

Series C11

- *Gull wings optional*
- *Wide frequency range*
- *Optional tristate*

RoHS COMPLIANT 2002 / 95 / EC

Part Numbering Example: C11 00 4 45 - A2 - 50.0 TS

C11	00	4	45	A2	50.0	TS
SERIES	**STABILITY**	**PACKAGE STYLE**	**SYMMETRY**	**OPERATING TEMP.**	**FREQUENCY**	
C11	00 = ±100 ppm 50 = ± 50 ppm 25 = ± 25 ppm 10 = ± 10 ppm	1 = Full Size 3 = Full Size, Gull Wing 4 = Half Size 6 = Half Size, Gull Wing	Blank = 40/60% 45 = 45/55%	Blank = 0°C ~ +70°C A2=-40°C ~ +85°C		Blank = No Connection TS = Tristate, pin 1

Specifications:

Frequency Range:	1.000 MHz to 100 MHz
Available Stability Options:	±100 ppm ±50 ppm ±25 ppm ±10 ppm
Output Series:	TTL
Input Voltage:	+5.0 VDC ±10%
Operating Temperature Range Options:	-10°C to +70°C -40°C to +85°C
Output Voltage:	1.000 to 24.999 MHz V_{OL}=0.4 V Max. V_{OH}=2.4 V. Min. 25.000 to 100.000 MHz V_{OL}=0.5 V Max. V_{OH}=2.4 V Min.
Output Load:	10 TTL
Maximum Input Current:	15 mA (1.000 to 7.999 MHz) 30 mA (8.000 to 24.999 MHz) 70 mA (25.000 to 69.999 MHz) 80 mA (70.000 to 100.000 MHz)
Maximum Rise/Fall Time:	10 ns (1.000 to 24.999 MHz) 5 ns (25.000 to 69.999 MHz) 4 ns (70.000 to 100.000 MHz)
Duty Cycle:	40/60% 45/55%
Max. Start-Up Time:	35 ms (1.000 to 3.999 MHz) 30 ms (4.000 to 7.999 MHz) 20 ms (8.000 to 19.999 MHz) 15 ms (20.000 to 100.000 MHz)
Tristate Input:	+0.40 VDC Max. to Disable +2.40 VDC Min. to Enable or Open to Enable
Storage Temperature:	-55°C to +125°C

OUTPUT WAVE FORM

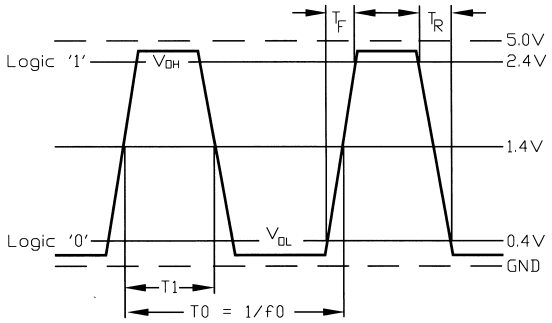

SYMMETRY = (T_1/T_0) × 100%

TEST CIRCUIT

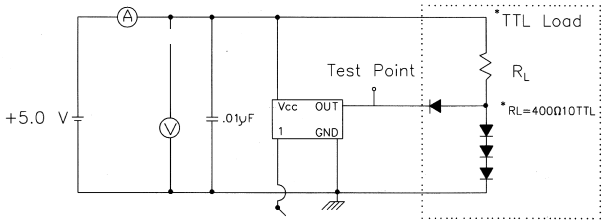

* Includes stray and probe capacitance (15pF TYP)

Cardinal Components, Inc.
155 Route 46 West
Wayne, NJ 07470
Rev: C-090414-11

TEL: (973)785-1333
E-MAIL: sales@cardinalxtal.com
WEB: http://www.cardinalxtal.com

Dip Oscillator Package Dimensions

Style 1 Full Size 14 Pin Dip

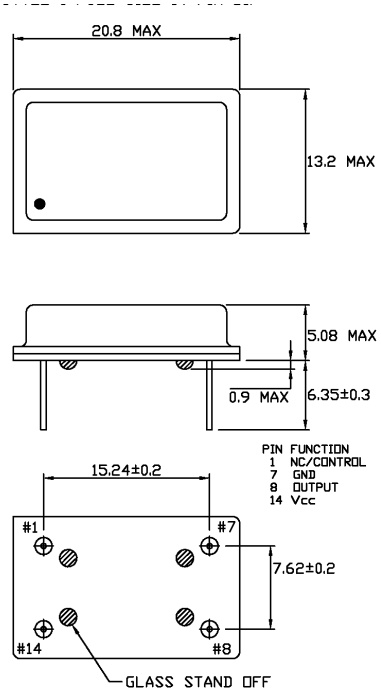

Style 3 Full Size 14 Pin Dip Gull Wing

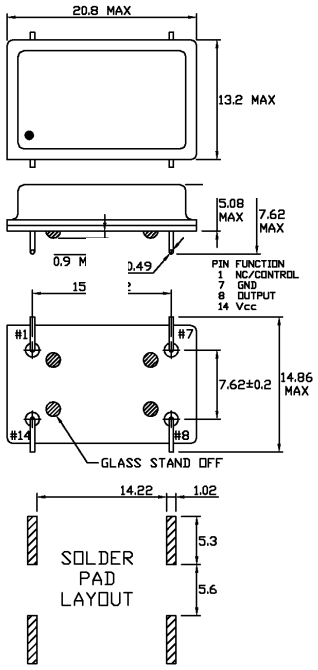

Style 4 Half Size 8 Pin Dip

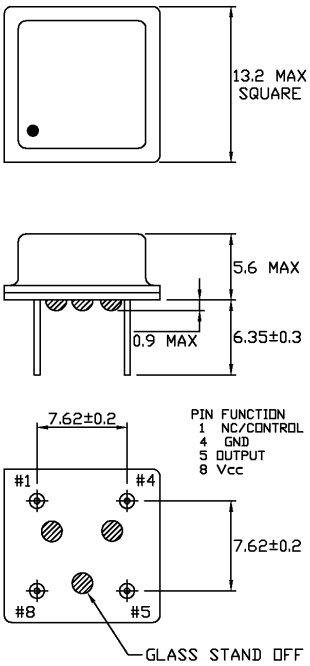

Style 6 Half Size 8 Pin Dip Gull Wing

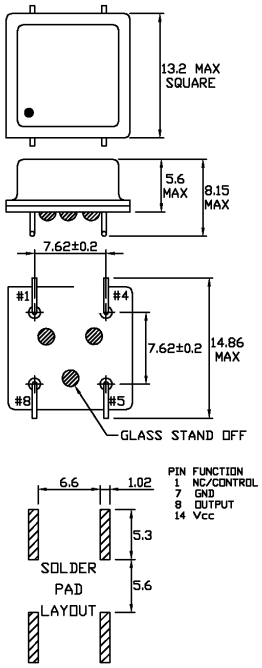

Cardinal Components, Inc.
155 Route 46 West
Wayne, NJ 07470
Rev: C-090414-11

TEL: (973)785-1333
E-MAIL: sales@cardinalxtal.com
WEB: http://www.cardinalxtal.com

CARDINAL COMPONENTS

TCXO SECTION

Page Number	Output Type	TCXO	PCB Mount	Package Dimension (LxWxH) in mm	Package Style	Voltage (V)	Stability	Freq Range Low (MHz)	Freq Range High (MHz)
T - 1	Clipped Sine	**CTX5**	SMD	9.6x11.4x3.9	FR4	3.0 - 5.0	2.5	12	19.68
T - 2	Clipped Sine	**CTX6**	SMD	9.6x11.4x4.0	FR4	3.0 - 5.0	2.5	12	19.68
T - 3	Clipped Sine	**CTX7**	SMD	5x7x2	Ceramic	3.3, 5.0	2.5, 3.0, 5.0	12	19.68
T - 4	Clipped Sine	**CTCX**	SMD	11.7x18.3x4.7	FR4	5	2.5, 3.0, 5.0	9.6	32
T - 5	Clipped Sine	**CTX8**	SMD	11.7x18.3x4.7	FR4	5	2.5, 3.0, 5.0	9.6	32
T - 6	Clipped Sine	**CC131**	SMD	11.7x18.3x4.5	FR4	5	1.5 - 5.0	9.6	35
T - 7	Clipped Sine	**CT4S**	SMD	9.6x11.4x2.5	FR4	3.0, 3.3, 5.0	1.5, 2.5	1	35
T - 8	Clipped Sine	**CTX4**	SMD	9.6x11.4x4.0	FR4	3.0 - 5.0	2.5	1	200
T - 9	CMOS	**CTAM**	SMD	5.2x7.2x3.1	FR4	3.3	2.5	1.5	200
T -10	CMOS	**CTPP**	SMD	9.6x11.4x3.0	FR4	3.3	2.5	38	640
T - 11	CMOS, TTL	**CC128**	SMD	9.6x11.4x4.0	FR4	5	1.5 - 5.0	1	35
T - 12	CMOS, TTL	**CC132**	SMD	11.7x18.3x4.5	FR4	5	1.5 - 5.0	1	35
T - 13	LVDS	**CTAL**	SMD	5.2x7.2x3.1	FR4	3.3	2.5	1.5	200
T - 14	LVDS	**CTL**	SMD	9.0x14x3.0	FR4	3.3	2.5	38	640
T - 15	LVDS	**CTHL**	SMD	5.2x7.2x3.1	FR4	3.3	2.5	200	800
T - 16	LVPECL	**CTED**	SMD	9.0x14x3.0	FR4	3.3	2.5	4	25
T - 17	LVPECL	**CTAE**	SMD	5.2x7.2x3.1	FR4	3.3	2.5	9.6	32
T - 18	LVPECL	**CTHE**	SMD	5.2x7.2x3.1	FR4	3.3	2.5	1.5	200

Surface Mount TCXO

Series CTX5

Cardinal's CTX5 oscillator has various input supply voltage options

RoHS COMPLIANT 2002 / 95 / EC

Part Numbering Example: CTX5 L Z - A3 B3 - 15.360

CTX5	L	Z	A3	B3	15.360
SERIES	**VOLTAGE**	**PACKAGING OPTIONS**	**OPERATING TEMP.**	**STABILITY**	**FREQUENCY**
CTX5	Blank = 5V B = 4.0V C = 3.7V L = 3.3V E = 3.0V	Z = Tape and Reel	A1=-10°C ~ +50°C A2=-10°C ~ +60°C A3=-30°C ~ +75°C A4=-40°C ~ +75°C	B3 = ±2.5 ppm	

Specifications:

Frequency Range:	12.000 MHz to 19.680 MHz	
Available Stability Options:	±2.5 ppm	
Output Series:	Clipped Sine	
Input Voltage:	+5.0 VDC ± 5% +4.0 VDC ± 5% +3.7 VDC ± 5% +3.3 VDC ± 5% +3.0 VDC ± 5%	*Standard*
Operating Temperature Range Options:	-30°C to +75°C	*Standard*
Output Voltage:	1.0 Volt Peak to Peak Minimum	
Frequency Trim Range With Externally Adjustable Trimmer:	±3.0 ppm Minimum	
Output Load:	10K OHM Parallel with 5 pf	
Maximum Input Current:	2.0 mA	
Maximum Frequency Aging at +25°C:	±1.0 ppm/yr	
Freq. Stability Vs. Change of Input Voltage of ±5%:	±0.3 ppm	
Packaging:	Tape and Reel (1K per Reel)	

CTX5

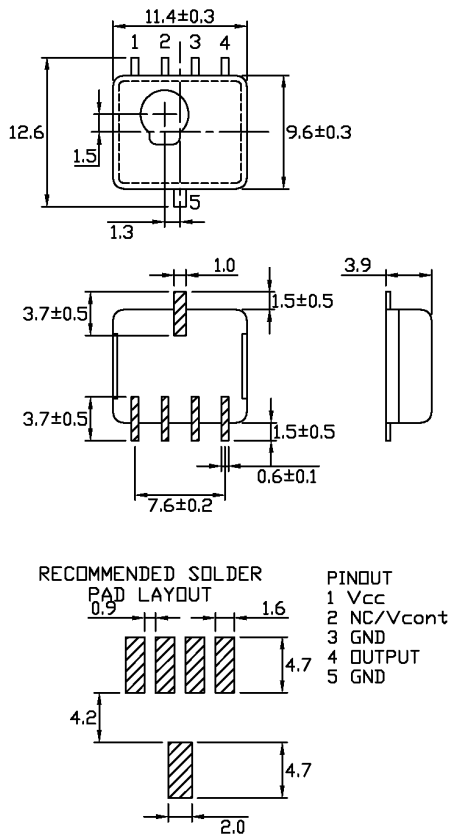

Cardinal Components, Inc.
155 Route 46 West
Wayne, NJ 07470
Rev: T-090414-12

TEL: (973)785-1333
E-MAIL: sales@cardinalxtal.com
WEB: http://www.cardinalxtal.com

Surface Mount TCXO

- *4.0 mm max height*
- *Various input supply voltage options*

Series CTX6

Pb RoHS COMPLIANT 2002 / 95 / EC

Part Numbering Example: CTX6 L Z - A3 B3 - 15.360

CTX6	L	Z	A3	B3	15.360
SERIES	VOLTAGE	PACKAGING OPTIONS	OPERATING TEMP.	STABILITY	FREQUENCY
CTX6	Blank = 5V B = 4.0V C = 3.7V L = 3.3V E = 3.0V	Z = Tape and Reel	A1=-10°C ~ +50°C A2=-10°C ~ +60°C A3=-30°C ~ +75°C A4=-40°C ~ +75°C	B3 = ±2.5 ppm	

Specifications:

Frequency Range:	12.000 MHz to 19.680 MHz
Available Stability Options:	±2.5 ppm
Output Series:	Clipped Sine
Input Voltage:	+5.0 VDC ±5% +4.0 VDC ±5% +3.7 VDC ±5% +3.3 VDC ±5% +3.0 VDC ±5%
Operating Temperature Range Options:	-30°C to +75°C
Output Voltage:	1.0 Volt Peak to Peak Minimum
Frequency Trim Range With Externally Adjustable Trimmer:	±3.0 ppm Minimum
Output Load:	10K OHM Parallel with 15 pf
Maximum Input Current:	2.0 mA
Maximum Frequency Aging at +25°C:	±1 ppm/yr
Freq. Stability Vs. Change of Input Voltage of ±5%:	±0.3 ppm
Packaging:	Tape and Reel (1K per Reel)

CTX6

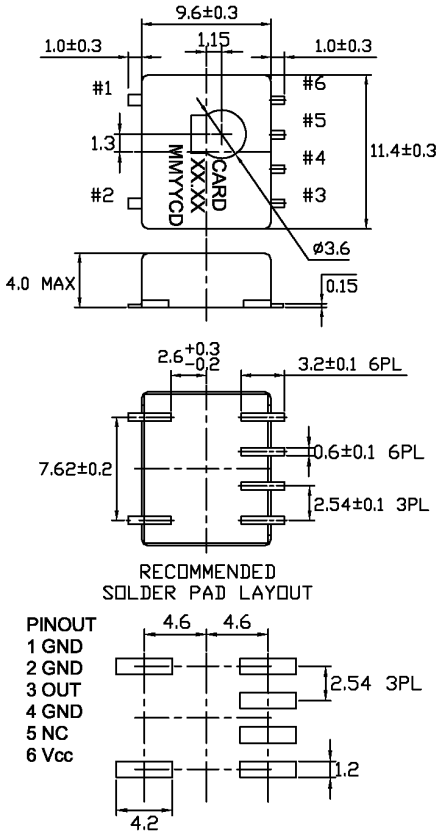

5 X 7 TCX0

- *Industry standard footprint*

Series CTX7

RoHS COMPLIANT 2002 / 95 / EC

Part Numbering Example: CTX7LZ - A3 B3 - 15.360

CTX7	L	Z	A3	B3	15.360
SERIES	VOLTAGE	PACKAGING OPTIONS	OPERATING TEMP.	STABILITY	FREQUENCY
CTX7	Blank = +5.0 V ±5% L = +3.3 V ±5%	Z = Tape and Reel	A1=-10°C ~ +50°C A2=-10°C ~ +60°C A3=-30°C ~ +75°C A4=-40°C ~ +75°C	B1 = ±5.0 ppm B2 = ±3.0 ppm B3 = ±2.5 ppm	

Specifications:

Frequency Range:	9.600 MHz to 32.000 MHz
Available Stability Options:	±5.0 ppm ±3.0 ppm ±2.5 ppm
Output Series:	Clipped Sine
Input Voltage:	+5.0 VDC ±5% +3.3 VDC ±5%
Operating Temperature Range Options:	-10°C to +50°C -10°C to +60°C -30°C to +75°C -40°C to +75°C
Output Voltage:	1.0 Volt Peak to Peak Minimum
Frequency Trim Range With Externally Adjustable Trimmer:	± 3.0 ppm Minimum
Output Load:	10K OHM Parallel with 10 pf
Maximum Input Current:	2.0 mA
Maximum Frequency Aging at +25°C:	±1 ppm/yr
Freq. Stability Vs. Change of Input Voltage of ±5%:	±0.3 ppm
Packaging:	Tape and Reel (1K per Reel)

CTX7

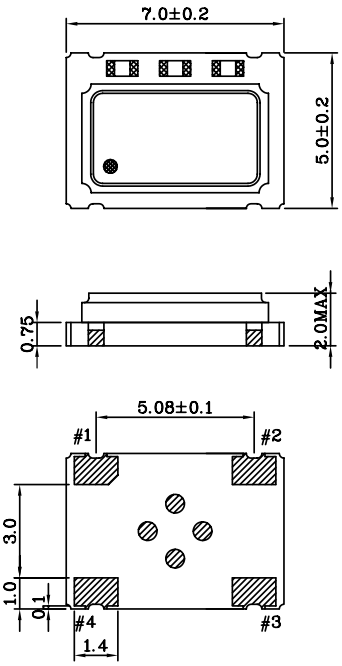

PIN CONNECTION
#1 V.C or N.C
#2 GND
#3 OutPut
#4 Vcc

Recommended soldering pattern

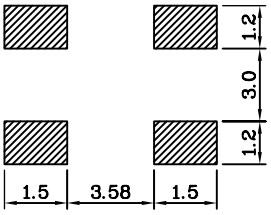

Cardinal Components, Inc.
155 Route 46 West
Wayne, NJ 07470
Rev: T-090414-12

TEL: (973)785-1333
E-MAIL: sales@cardinalxtal.com
WEB: http://www.cardinalxtal.com

Thru Hole TCXO

Series CTCX

- *Tight frequency*
- *Stability over temperature with excellent aging*

Pb RoHS COMPLIANT 2002 / 95 / EC

Part Numbering Example: CTCX - A3 B3 - 15.360

CTCX	A3	B3	15.360
SERIES	OPERATING TEMP.	STABILITY	FREQUENCY
CTCX	A1=-10°C ~ +50°C A2=-10°C ~ +60°C A3=-30°C ~ +75°C A4=-40°C ~ +75°C	B1 = ±5.0 ppm B2 = ±3.0 ppm B3 = ±2.5 ppm	

Specifications:

Frequency Range:	4.000 MHz to 25.000 MHz
Available Stability Options:	±5.0 ppm ±2.5 ppm *Standard* ±3.0 ppm
Output Series:	Clipped Sine
Input Voltage:	+5.0 VDC ±5%
Operating Temperature Range Options:	-30°C to +75°C *Standard* -10°C to +60°C
Output Voltage:	1.0 Volt Peak to Peak Minimum
Frequency Trim Range With Externally Adjustable Trimmer:	±3.0 ppm Minimum
Output Load:	10K OHM Parallel with 10 pf
Maximum Input Current:	2.0 mA
Maximum Frequency Aging at +25°C:	±1 ppm/yr
Freq. Stability Vs. Change of Input Voltage of ±5%:	±0.5 ppm
Storage Temperature	-40°C to +85°C

CTCX

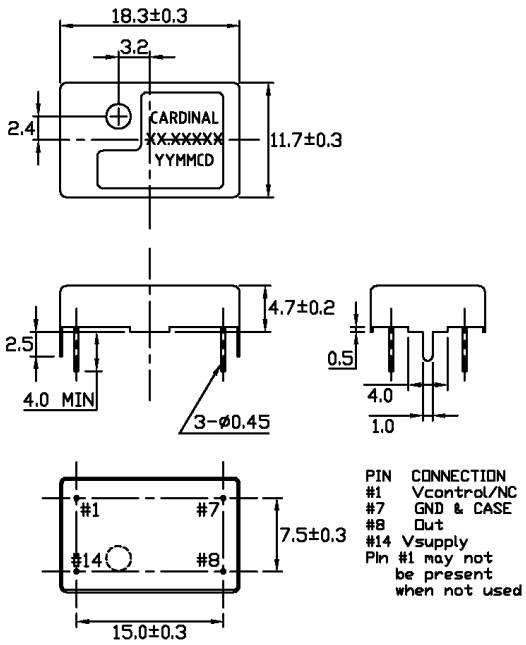

TEST CIRCUIT

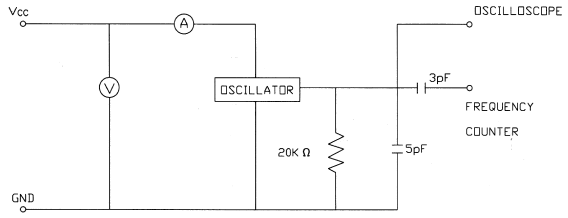

Cardinal Components, Inc.
155 Route 46 West
Wayne, NJ 07470
Rev: T-090414-12

TEL: (973)785-1333
E-MAIL: sales@cardinalxtal.com
WEB: http://www.cardinalxtal.com

Surface Mount TCX0

- *Industry standard footprint*

Series CTX8

Pb RoHS COMPLIANT 2002 / 95 / EC

Part Numbering Example: CTX8 Z - A3 B3 - 15.360

CTX8	Z	A3	B3	15.360
SERIES	PACKAGING OPTIONS	OPERATING TEMP.	STABILITY	FREQUENCY
CTX8	Z = Tape and Reel	A1=-10°C ~ +50°C A2=-10°C ~ +60°C A3=-30°C ~ +75°C A4=-40°C ~ +75°C	B1 = ±5.0 ppm B2 = ±3.0 ppm B3 = ±2.5 ppm	

Specifications:

Frequency Range:	9.600 MHz to 32.000 MHz
Available Stability Options:	±5.0 ppm ±3.0 ppm ±2.5 ppm
Output Series:	Clipped Sine
Input Voltage:	+5.0 VDC ±5%
Operating Temperature Range Options:	-10°C to +50°C -10°C to +60°C -30°C to +75°C -40°C to +75°C
Output Voltage:	1.0 Volt Peak to Peak Minimum
Frequency Trim Range With Externally Adjustable Trimmer:	± 3.0 ppm Minimum
Output Load:	10K OHM Parallel with 10 pf
Maximum Input Current:	2.0 mA
Maximum Frequency Aging at +25°C:	±1 ppm/yr
Freq. Stability Vs. Change of Input Voltage of ±5%:	±0.3 ppm
Packaging:	Tape and Reel (1K per Reel)

CTX8

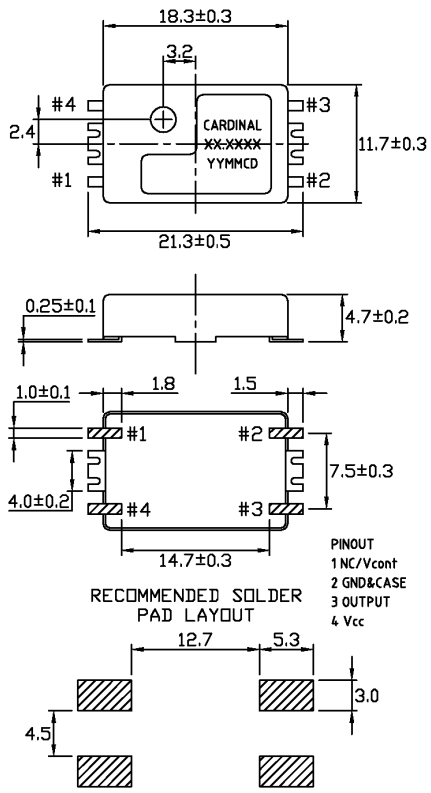

Cardinal Components, Inc.
155 Route 46 West
Wayne, NJ 07470
Rev: T-090414-12

TEL: (973)785-1333
E-MAIL: sales@cardinalxtal.com
WEB: http://www.cardinalxtal.com

Surface Mount TCXO

Series CC131

- *4.5 mm height*
- *Tight stability availability*
- *Sinewave output*

Pb RoHS COMPLIANT 2002 / 95 / EC

Part Numbering Example: CC131 L Z - A2 B2 - 22.5792

CC131	L	Z	A2	B2	22.5792
SERIES	**VOLTAGE**	**PACKAGING OPTIONS**	**OPERATING TEMP.**	**STABILITY**	**FREQUENCY**
CC131	Blank = 5V	Blank = Bu k Z = Tape and Reel	A2 = -10°C ~+60°C A3 = -30°C ~+75°C A5 = -20°C ~+70°C A9 = 0°C ~+50°C AA = -10°C ~+70°C AB = -30°C ~+70°C AC = -30°C ~+60°C AE = -40°C ~+80°C	B1 = ±5.0 ppm B2 = ±3.0 ppm B3 = ±2.5 ppm B4 = ±2.0 ppm B5 = ±1.5 ppm B9 = ±4.0 ppm BB = ±4.5 ppm BF = ±3.5 ppm	

Specifications:

Frequency Range:	1.000 MHz to 35.000 MHz
Available Stability Options:	±5.0 ppm ±4.5 ppm ±4.0 ppm ±3.5 ppm ±3.0 ppm ±2.5 ppm ±2.0 ppm ±1.5 ppm
Output Series:	Clipped Sine
Input Voltage:	+5.0 VDC ±5%
Operating Temperature Range Options:	0°C to +50°C -10°C to +60°C -10°C to +70°C -20°C to +70°C -30°C to +60°C -30°C to +70°C -30°C to +75°C -40°C to +80°C
Output Voltage:	1.0 Volt Peak to Peak Minimum
Frequency Trim Range With Externally Adjustable Trimmer:	±3.0 ppm Minimum
Output Load:	20K OHM Parallel with 5 pf
Maximum Input Current:	3 mA
Maximum Frequency Aging at +25°C:	±1 ppm/yr
Storage Temperature:	-40°C to +80°C
Packaging:	Tape and Reel (1K per Reel)

CC131

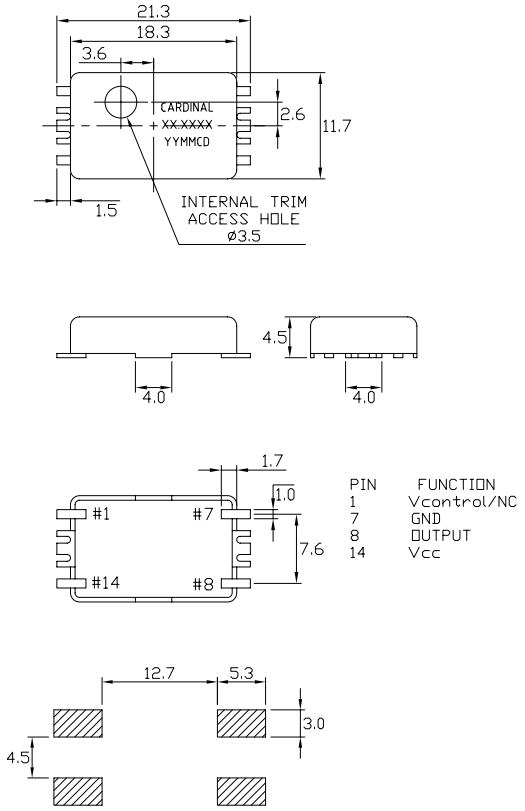

Cardinal Components, Inc.
155 Route 46 West
Wayne, NJ 07470
Rev: T-090414-12

TEL: (973)785-1333
E-MAIL: sales@cardinalxtal.com
WEB: http://www.cardinalxtal.com

Surface Mount TCXO

Series CT4S

- *Industry standard footprint*
- *2.5 mm max. height*
- *Low power consumption*

Pb RoHS COMPLIANT 2002 / 95 / EC

Part Numbering Example: CT4S L Z - A3 B3 - 15.360

CT4S	L	Z	A3	B3	15.360
SERIES	VOLTAGE	PACKAGING OPTIONS	OPERATING TEMP.	STABILITY	FREQUENCY
CT4S	Blank = 5V L = 3.3V E = 3.0V	Z = Tape and Reel	A1 = -10°C ~+50°C A2 = -10°C ~+60°C A3 = -30°C ~+75°C A4 = 40°C ~+75°C	B3 = ±2.5 ppm B5 = ±1.5 ppm	

Specifications:

Frequency Range:	9.600 MHz to 32.000 MHz
Available Stability Options:	±2.5 ppm ±1.5 ppm
Output Series:	Clipped Sine
Input Voltage:	+5.0 VDC ±5% +3.3 VDC ±5% +3.0 VDC ±5%
Operating Temperature Range Options:	-30°C to +75°C -20°C to +70°C
Output Voltage:	1.0 Volt Peak to Peak Minimum (+5 VDC Input) 0.8 VOLT Peak to Peak Minimum (+3 VDC Input)
Frequency Trim Range With Externally Adjustable Trimmer:	±3.0 ppm Minimum
Output Load:	10K OHM Parallel with 10 pf
Maximum Input Current:	2.0 mA (9.600 to 19.999 MHz) 3.0 mA (20.000 to 32.000 MHz)
Maximum Frequency Aging at +25°C:	±1 ppm/yr
Freq. Stability Vs. Change of Input Voltage of ±5%:	±0.3 ppm
Storage Temperature:	-40°C to +85°C
Packaging:	Tape and Reel (1K per Reel)

CT4S

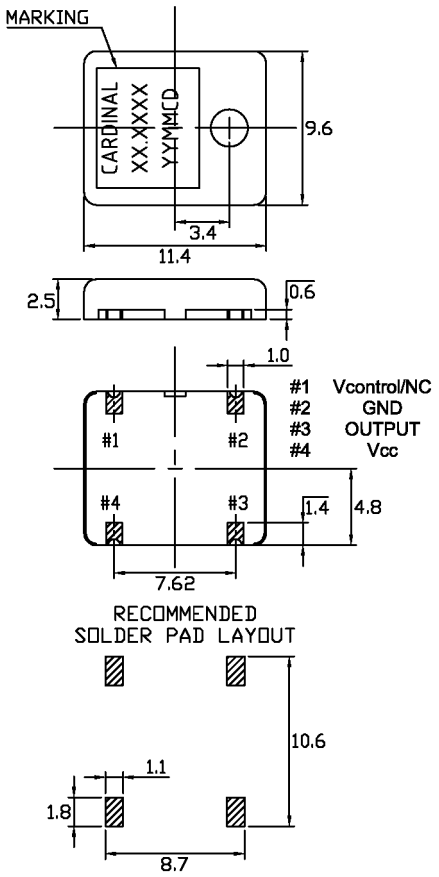

Cardinal Components, Inc.
155 Route 46 West
Wayne, NJ 07470

TEL: (973)785-1333
E-MAIL: sales@cardinalxtal.com
WEB: http://www.cardinalxtal.com

Surface Mount TCXO

Series CTX4

- *4.0 mm max. height*
- *Wide temperature range*
- *Various input supply voltage options*
- *Eutectic reflow soldering possible*

Pb RoHS COMPLIANT 2002 / 95 / EC

Part Numbering Example: CTX4 L Z - A3 B3 - 15.360

CTX4	L	Z	A3	B3	15.360
SERIES	VOLTAGE	PACKAGING OPTIONS	OPERATING TEMP.	STABILITY	FREQUENCY
CTX4	Blank = 5V B = 4.0V C = 3.7V L = 3.3V E = 3.0V	Z = Tape and Reel	A1=-10°C ~ +50°C A2=-10°C ~ +60°C A3=-30°C ~ +75°C A4=-40°C ~ +75°C	B3 = ±2.5 ppm	

Specifications:

Frequency Range:	12.000 MHz to 19.680 MHz
Available Stability Options:	±2.5 ppm
Output Series:	Clipped Sine
Input Voltage:	+5.0 VDC ± 5% *Standard* +4.0 VDC ± 5% +3.7 VDC ± 5% +3.3 VDC ± 5% +3.0 VDC ± 5%
Operating Temperature Range Options:	-30°C to +75°C *Standard*
Output Voltage:	1.0 Volt Peak to Peak Minimum
Frequency Trim Range With Externally Adjustable Trimmer:	±3.0 ppm Minimum
Output Load:	10K OHM Parallel with 10 pf
Maximum Input Current:	2.0 mA
Maximum Frequency Aging at +25°C:	±1.0 ppm/yr
Freq. Stability Vs. Change of Input Voltage of ±5%:	±0.3 ppm
Packaging:	Tape and Reel (1K per Reel)

CTX4

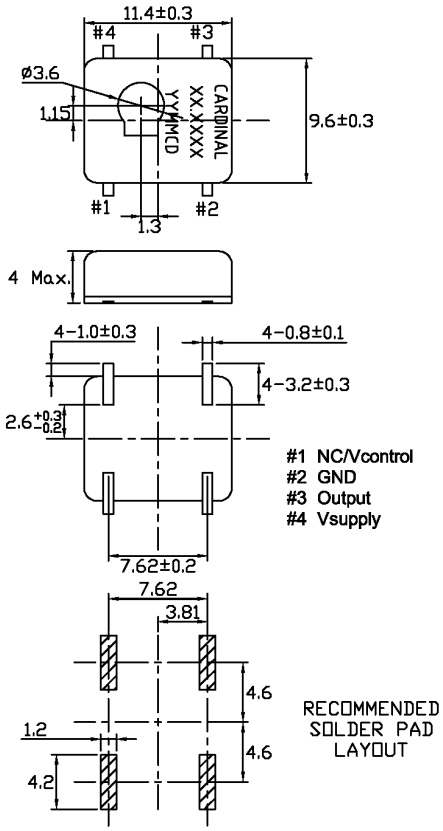

Cardinal Components, Inc.
155 Route 46 West
Wayne, NJ 07470
Rev: T-090414-12

TEL: (973)785-1333
E-MAIL: sales@cardinalxtal.com
WEB: http://www.cardinalxtal.com

Programmable CMOS TCXO

* CMOS Output
* Fast Delivery
* Industry Standard Packaging

Applications

* Serial Communications
* Routers
* Switches
* WAN Interfaces
* Test Equipment

Series CTAM

RoHS COMPLIANT 2002 / 95 / EC

Part Numbering Example: CTAM L Z - A3 B3 - 22.5792 TS

CTAM	L	Z	A3	B3	22.5792	TS
SERIES	VOLTAGE	PACKAGING OPTIONS	OPERATING TEMP.	STABILITY	FREQUENCY	TRI-STATE
CTAM	L = 3.3V	Blank = Bulk Z = Tape and Reel	Blank = 0°C ~ +70°C A5 = -20°C ~ +70°C A3 = -30°C ~ +75°C	B3 = ±2.5 ppm		TS = Tri-State

Specifications:	Min	Typ	Max	Unit
Frequency Range:	1.5		200	MHz
Stability:	-2.5		+ 2.5	ppm
Supply Voltage:	3.135	3.3	3.465	V
Vdd Rise Time:	100			µS
Operating Temperature:	-30		+ 75	°C
Storage Temperature:	-45°C		+ 85	
Duty Cycle:	45		55	%
Start-Up Time:		3	10	mS
Aging: (ppm/1st Year) Ta=25C, Vdd=3.3V			1	ppm
Supply Current:			35	mA
Short Circuit Current:		± 50		mA
RMS Period Jitter:		10		pS
RMS Integrated Jitter: 12kHz to 20MHz		15		pS
Phase Noise @ 10kHz:			-100	dBc/Hz
Output Voltage: Voh Vol	 vdd -0.4		 0.4 	 V V
Rise/Fall Time: CL = 15 pf			2.4	nS
Output Level:		CMOS		
Packaging:		Tape and Reel 1000 pcs per Reel		

Tristate internal pull up. Output active when high.

CTAM

Dimensions are in mm

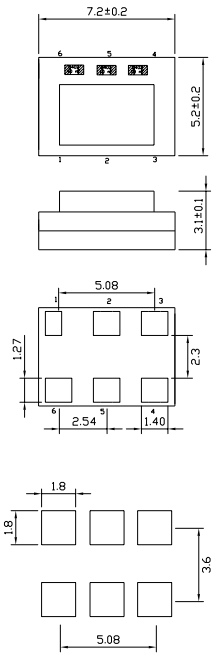

Pin Function
1 Control -Tristate with pull up
2 Do Not connect
3 Ground
4 Output
5 Do Not Connect
6 Vdd

Cardinal Components, Inc.
155 Route 46 West
Wayne, NJ 07470
Rev: T-090414-12

TEL: (973)785-1333
E-MAIL: sales@cardinalxtal.com
WEB: http://www.cardinalxtal.com

Programmable CMOS TCXO

• 9.6 x 11.4 SMD

Series CTPP

RoHS COMPLIANT 2002 / 95 / EC

Part Numbering Example: CTPP9Z - 100.0

CTPP	9	Z	100.0
SERIES	PACKAGE STYLE	ADDED FEATURES	FREQUENCY
	9 = 9.6x11.4 SMD	Blank = Bu k T = Tube Z = Tape/Reel	1.0 – 200.0

Specifications:	Min	Typ	Max	Unit
Frequency Range:	1.0		200.0	MHz
Stability Options	-2.5		2.5	ppm
Programmable Input Voltage	3.135	3.3	3.465	V
Operating Temperature Range Options:	-30		75	°C
Storage Temperature:	-40		85	°C
Aging (PPM/1st Year): Ta=25C, Vdd=3.3V			± 1.0	
Programmable Output Level:	CMOS			

Tristate internal pull up. Output active when high

Notes: Recommended 01 µF bypass capacitor from Vcc to GND. Capacitor should be as close to oscillator as possible.

CTPP

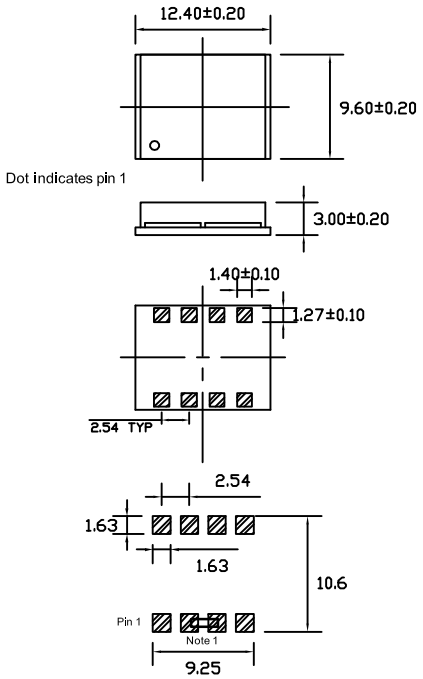

Recommended solder pad layout
Note1: Connect pin2 to pin3

PIN FUNCTION
PIN 1 OE
PIN 2 CONNECT TO PIN 3
PIN 3 CONNECT TO PIN 2
PIN 4 GND
PIN 5 OUTPUT
PIN 6 FACTORY USE (MAKE NO CONNECTION)
PIN 7 FACTORY USE (MAKE NO CONNECTION)
PIN 8 VDD

Cardinal Components, Inc.
155 Route 46 West
Wayne, NJ 07470

TEL: (973)785-1333
E-MAIL: sales@cardinalxtal.com
WEB: http://www.cardinalxtal.com

Surface Mount TCXO

- *4.0 mm height*
- *Tight stability availability*
- *TTL/HCMOS*

Series CC128

Pb RoHS COMPLIANT 2002 / 95 / EC

Part Numbering Example: CC128 L Z - A2 B2 45 - 22.5792

CC128	L	Z	A2	B2	45	22.5792
SERIES	**VOLTAGE**	**PACKAGING OPTIONS**	**OPERATING TEMP.**	**STABILITY**	**SYMMETRY**	**FREQUENCY**
CC128	Blank = 5V L = 3.3V	Blank = Bulk Z = Tape and Reel	A2 = -10°C ~+60°C A3 = -30°C ~+75°C A5 = -20°C ~+70°C A9 = 0°C ~+50°C AA = -10°C ~+70°C AB = -30°C ~+70°C AC = -30°C ~+60°C AE = -40°C ~+80°C	B1 = ±5.0 ppm B2 = ±3.0 ppm B3 = ±2.5 ppm B4 = ±2.0 ppm B5 = ±1.5 ppm B9 = ±4.0 ppm BB = ±4.5 ppm BF = ±3.5 ppm	Blank = 40/60% 45 = 45/55%	

Specifications: CC128

	9.600 MHz to 35.000 MHz
Frequency Range:	±5.0 ppm
Available Stability Options:	±4.5 ppm ±4.0 ppm ±3.5 ppm ±3.0 ppm ±2.5 ppm ±2.0 ppm ±1.5 ppm
Output Series:	TTL/CMOS
Input Voltage:	+5.0 VDC ±5%
Operating Temperature Range Options:	0°C to +50°C -10°C to +60°C -10°C to +70°C -20°C to +70°C -30°C to +60°C -30°C to +70°C -30°C to +75°C -40°C to +80°C
Output Voltage:	TTL V_{OL} = 0.4 V Max. TTL V_{OH} = 2.4 V Min. HCMOS V_{OL} = 10%V_{DD} V Max. HCMOS V_{OH} = 90%V_{DD} V Min.
Frequency Trim Range With Externally Adjustable Trimmer:	±3.0 ppm Minimum
Output Load:	10 LS TTL, 15 pf CMOS
Maximum Input Current:	20 mA
Maximum Rise/Fall Time:	10 ns
Duty Cycle:	40/60% 45/55%
Maximum Frequency Aging at +25°C:	± 1 ppm/yr
Storage Temperature:	-40°C to +80°C
Packaging:	Tape and Reel (1K per Reel)

CC128

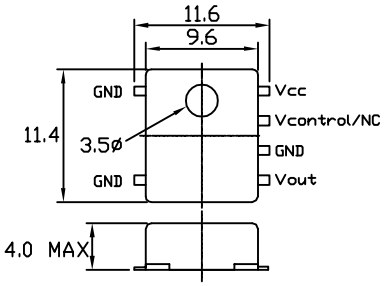

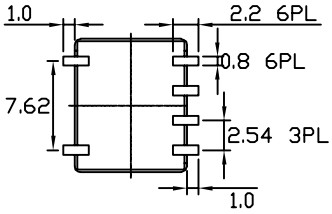

RECOMMENDED SOLDER PAD LAYOUT

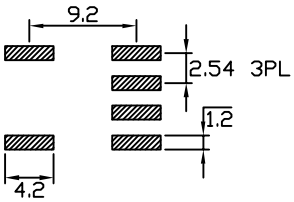

Cardinal Components, Inc.
155 Route 46 West
Wayne, NJ 07470
Rev: T-090414-12

TEL: (973)785-1333
E-MAIL: sales@cardinalxtal.com
WEB: http://www.cardinalxtal.com

Surface Mount TCXO

Series CC132

- *4.5 mm height*
- *Tight stability availability*
- *TTL/HCMOS*

Pb RoHS COMPLIANT 2002 / 95 / EC

Part Numbering Example: CC132 L Z - A2 B2 45 - 22.5792

CC132	L	Z	A2	B2	45	22.5792
SERIES	**VOLTAGE**	**PACKAGING OPTIONS**	**OPERATING TEMP.**	**STABILITY**	**SYMMETRY**	**FREQUENCY**
CC132	Blank = 5V	Blank = Bulk Z = Tape and Reel	A2 = -10°C ~+60°C A3 = -30°C ~+75°C A5 = -20°C ~+70°C A9 = 0°C ~+50°C AA = -10°C ~+70°C AC = -30°C ~+60°C AE = -40°C ~+80°C	B1 = ±5.0 ppm B2 = ±3.0 ppm B3 = ±2.5 ppm B4 = ±2.0 ppm B5 = ±1.5 ppm B9 = ±4.0 ppm BB = ±4.5 ppm BF = ±3.5 ppm	Blank = 40/60% 45 = 45/55%	

Specifications:

Frequency Range:	1.000 MHz to 35.000 MHz
Available Stability Options:	±5.0 ppm ±4.5 ppm ±4.0 ppm ±3.5 ppm ±3.0 ppm ±2.5 ppm ±2.0 ppm ±1.5 ppm
Output Series:	TTL/CMOS
Input Voltage:	+5.0 VDC ±5%
Operating Temperature Range Options:	0°C to +50°C -10°C to +60°C -10°C to +70°C -20°C to +70°C -30°C to +60°C -30°C to +70°C -30°C to +75°C -40°C to +80°C
Output Voltage:	TTL V_{OL} = 0.4 V Max. TTL V_{OH} = 2.4 V Min. HCMOS V_{OL} = 10%V_{DD} V Max. HCMOS V_{OH} = 90%V_{DD} V Min.
Frequency Trim Range With Externally Adjustable Trimmer:	±3.0 ppm Minimum
Output Load:	10 LS TTL, 15 pf CMOS
Maximum Input Current:	20 mA
Maximum Rise/Fall Time:	10 ns
Duty Cycle:	40/60% 45/55%
Maximum Frequency Aging at +25°C:	±1 ppm/yr
Storage Temperature:	-40°C to +80°C
Packaging:	Tape and Reel (1K per Reel)

CC132

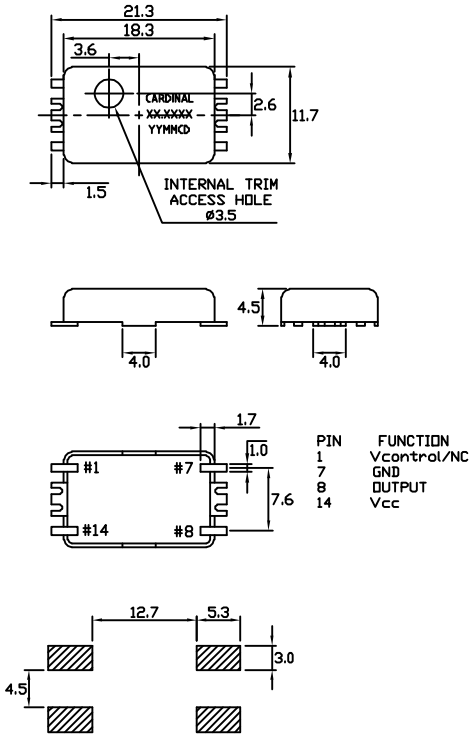

Cardinal Components, Inc.
155 Route 46 West
Wayne, NJ 07470
Rev: T-090414-12

TEL: (973)785-1333
E-MAIL: sales@cardinalxtal.com
WEB: http://www.cardinalxtal.com

Programmable LVDS TCXO

* LVDS Output
* Fast Delivery
* Industry Standard Packaging

Applications

* Serial Communications
* Routers
* Switches
* WAN Interfaces
* Test Equipment

Platinum Series

CTAL

RoHS COMPLIANT 2002 / 95 / EC

Part Numbering Example: CTAL L Z - A3 B3 - 22.5792 TS

CTAL	L	Z	A5	B3	22.5792	TS
SERIES	VOLTAGE	PACKAGING OPTIONS	OPERATING TEMP.	STABILITY	FREQUENCY	TRI-STATE
CTAL	L = 3.3V	Blank = Bulk Z = Tape and Reel	Blank = 0°C ~ +70°C A5 = -20°C ~ +70°C A3 = -30°C ~ +75°C	B3 = ±2.5 ppm		TS = Tri-State

Specifications:	Min	Typ	Max	Unit
Frequency Range:	1.5		200	MHz
Stability:	- 2.5		+ 2.5	ppm
Supply Voltage:	3.135	3.3	3.465	V
Vdd Rise Time:	100			µS
Operating Temperature:	-30		+ 75	°C
Storage Temperature:	-45°C		+ 85	
Duty Cycle:	45		55	%
Start-Up Time:		3	10	mS
Aging: (ppm/1st Year) Ta=25C, Vdd=3.3V			1	ppm
Supply Current:			130	mA
Short Circuit Current:		± 50		mA
RMS Period Jitter:		10		pS
RMS Integrated Jitter: **12kHz to 20MHz**		15		pS
Phase Noise @ 10kHz:			-100	dBc/Hz
Output Voltage: Voh Vol	 0.9		 1.6	 V V
Output Differential Voltage:	240	350	460	mV
Rise/Fall Time:		0.4	0.8	nS
Output Level:		LVDS		
Packaging:		Tape and Reel 1000 pcs per Reel		

Tristate internal pull up. Output active when high.

CTAL

Dimensions are in mm

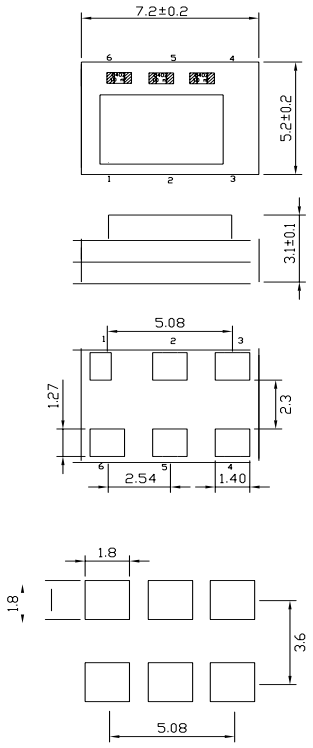

Pin Function
1 Control -Tristate with pull up
2 Do Not Connect
3 Ground
4 Output+
5 Output-
6 Vdd

Solder Pad Layout

LVDS Levels Test Circuit

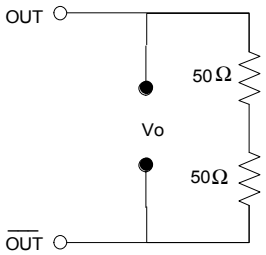

Cardinal Components, Inc.
155 Route 46 West
Wayne, NJ 07470
Rev: T-090414-12

TEL: (973)785-1333
E-MAIL: sales@cardinalxtal.com
WEB: http://www.cardinalxtal.com

TCXO LVDS

Series CTL

*** LVDS Output**
*** Industry Standard Outline**

Applications
- **Serial Communications**
- **Routers**
- **Switches**
- **WAN Interfaces**
- **Test Equipment**

Pb RoHS COMPLIANT 2002 / 95 / EC

Part Numbering Example: CTL Z - A5 B3 - 222.5792 TS

CTL	Z	A5	B3	222.5792	TS
SERIES	PACKAGING OPTIONS	OPERATING TEMP.	STABILITY	FREQUENCY	TRI-STATE
CTL	Blank = Bulk Z = Tape and Reel	Blank = 0°C ~ +70°C A5 = -20°C ~ +70°C	B3 = ± 2.5 ppm		TS = Tri-State

Specifications:	Min	Typ	Max	Unit
Frequency Range:	38		640	MHz
Stability:	-2.5		+ 2.5	ppm
Supply Voltage:	3.135	3.3	3.465	V
Operating Temperature:	-30		+ 70	°C
Storage Temperature:	-40		+ 85	°C
Duty Cycle:	45		55	%
Start-Up Time:		3	10	mS
Aging: (ppm/1st Year) Ta=25C, Vdd=3.3V			1	ppm
Supply Current:			100	mA
Short Circuit Current:		± 50		mA
RMS Period Jitter:		5		pS
RMS Integrated Jitter: 12kHz to 20MHz		0.7		pS
Phase Noise @ 10kHz:			-120	dBc/Hz
Output Voltage: Voh Vol	Vdd - 0.9		 Vdd - 1.6	 V V
Output Differential Voltage:	247	355	454	mV
Rise/Fall Time:		0.4	0.8	nS
Output Level:		LVDS		
Packaging:		Tape and Reel 1000 pcs per Reel		

Tristate internal pullup - output active when high.

CTL

Dimensions are in mm

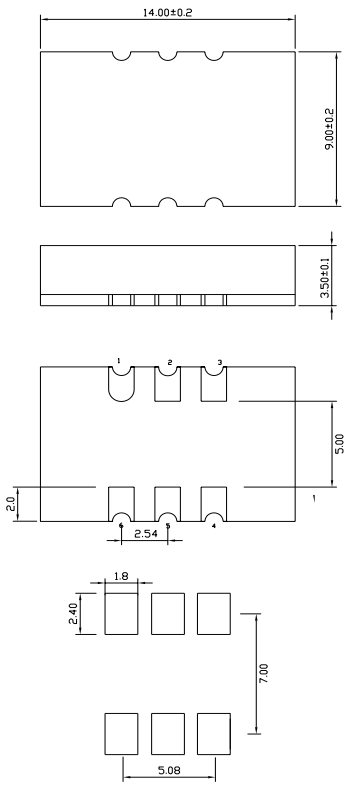

PIN Function
- ENABLE
- NO CONNECT
- Ground
- LVDS +
- LVDS -
- Vdd

LVDS Levels Test Circuit

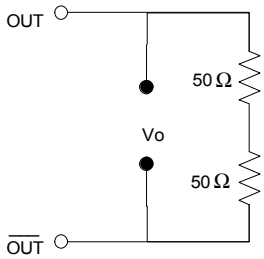

Cardinal Components, Inc.
155 Route 46 West
Wayne, NJ 07470
Rev: T-090414-12

TEL: (973)785-1333
E-MAIL: sales@cardinalxtal.com
WEB: http://www.cardinalxtal.com

CARDINAL COMPONENTS

Programmable TCXO LVDS

* LVDS Output
* Fast Delivery
* Industry Standard Packaging

Applications
* Serial Communications
* Routers
* Switches
* WAN Interfaces
* Test Equipment

Platinum Series CTHL

RoHS COMPLIANT 2002 / 95 / EC

Part Numbering Example: CTHL Z - A5 BP - 222.5792 TS

CTHL	Z	A5	BP	222.5792	TS
	PACKAGING OPTIONS	OPERATING TEMP.	STABILITY	FREQUENCY	TRI-STATE
CTHL	Blank = Bulk Z = Tape and Reel	Blank = 0°C ~ +70°C A5 = -20°C ~ +70°C A3 = -30°C ~ +75°C	B3 = 2.5 ppm		TS = Tri-State

Specifications:	Min	Typ	Max	Unit
Frequency Range:	200		800	MHz
Stability:	-2.5		+ 2.5	ppm
Supply Voltage:	3.135	3.3	3.465	V
Vdd Rise Time:	100			µS
Operating Temperature:	-30		+ 75	°C
Storage Temperature:	-45		+ 85	C
Duty Cycle:	45		55	%
Start-Up Time:		3	10	mS
Aging: (ppm/1st Year) Ta=25C, Vdd=3.3V			1	ppm
Supply Current:			140	mA
Short Circuit Current:		± 50		mA
RMS Period Jitter:		15		pS
RMS Integrated Jitter: 12kHz to 20MHz		20		pS
Phase Noise @ 10kHz:			-90	dBc/Hz
Output Voltage: Voh Vol	 0.9		 1.6	 V V
Output Differential Voltage:	240	350	460	mV
Rise/Fall Time:		0.4	0.8	nS
Output Level:		LVDS		
Packaging:		Tape and Reel 1000 pcs per Reel		

CTHL

Dimensions are in mm

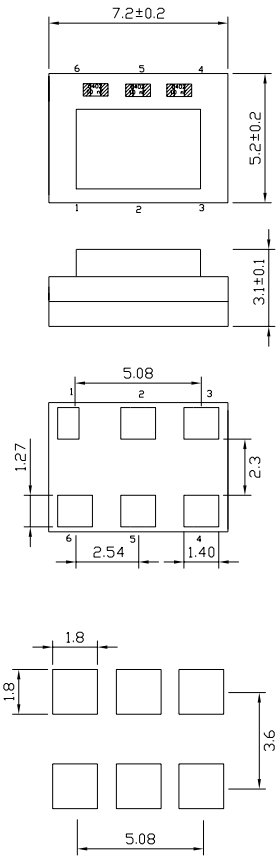

Pin Function
1 Control -Tristate with pull up
2 Do Not Connect
3 Ground
4 Output+
5 Output-
6 Vdd

Tristate internal pull up resistor--
output active when high

LVDS Levels Test Circuit

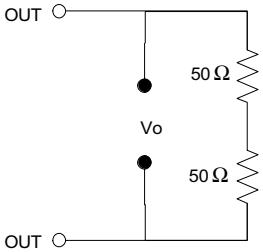

Cardinal Components, Inc.
155 Route 46 West
Wayne, NJ 07470

Rev: T-090414-12

TEL: (973)785-1333
E-MAIL: sales@cardinalxtal.com
WEB: http://www.cardinalxtal.com

LVPECL SURFACE MOUNT TCXO

Series CTED

* **LVPECL Output**
* **Industry Standard Outline**

Applications
* Serial Communications
* Routers
* Switches
* WAN Interfaces
* Test Equipment

RoHS COMPLIANT 2002 / 95 / EC

Part Numbering Example: CTED Z - A5 B3 - 222.5792 TS

CTED	Z	A5	B3	222.5792	TS
SERIES	PACKAGING OPTIONS	OPERATING TEMP.	STABILITY	FREQUENCY	TRI-STATE
CTED	Blank = Bulk Z = Tape and Reel	Blank = 0°C ~ +70°C A5 = -20°C ~ +70°C	B3 = ±2.5 ppm		TS = Tri-State

Specifications:	Min	Typ	Max	Unit
Frequency Range:	38		640	MHz
Stability:	-2.5		+ 2.5	ppm
Supply Voltage:	3.135	3.3	3.465	V
Operating Temperature:	-30		+ 70	°C
Storage Temperature:	-40		+ 85	°C
Duty Cycle:	45		55	%
Start-Up Time:		3	10	mS
Aging: (ppm/1st Year) Ta=25C, Vdd=3.3V			1	ppm
Supply Current:			100	mA
Short Circuit Current:		± 50		mA
RMS Period Jitter:		5		pS
RMS Integrated Jitter: 12kHz to 20MHz		0.7		pS
Phase Noise @ 10kHz:			-120	dBc/Hz
Output Voltage: Voh Vol	Vdd - 1.025		 Vdd - 1.62	 V V
Rise/Fall Time:		0.4	0.8	nS
Output Level:		LVPECL		
Packaging:		Tape and Reel 1000 pcs per Reel		

Tristate internal pull down.
Output active when low

CTED

Dimensions are in mm

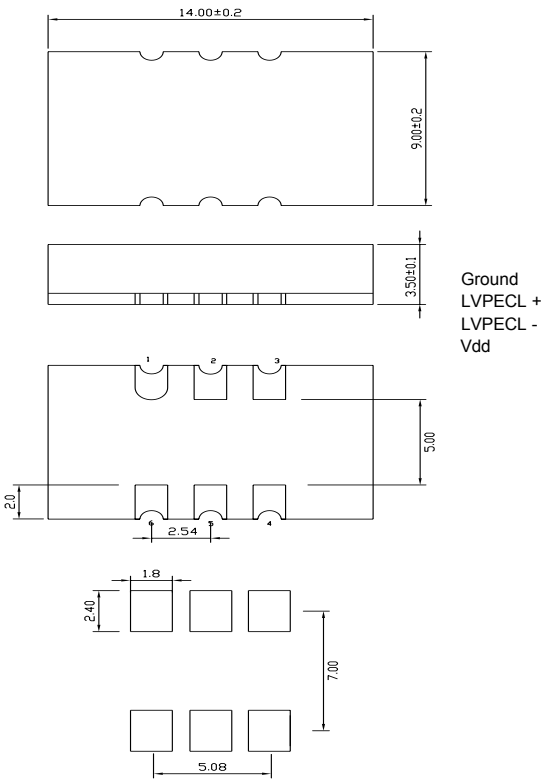

LVPECL Levels Test Circuit

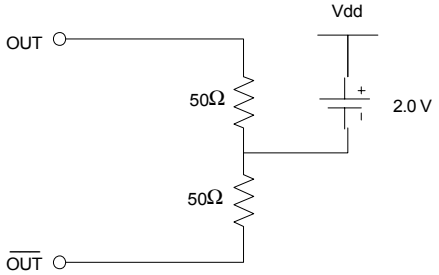

Cardinal Components, Inc.
155 Route 46 West
Wayne, NJ 07470
Rev: T-090414-12

TEL: (973)785-1333
E-MAIL: sales@cardinalxtal.com
WEB: http://www.cardinalxtal.com

Programmable LVPECL TCXO

* LVPECL Output
* Fast Delivery
* Industry Standard Packaging

Applications

* Serial Communications
* Routers
* Switches
* WAN Interfaces
* Test Equipment

Platinum Series CTAE

Pb RoHS COMPLIANT 2002 / 95 / EC

Part Numbering Example: CTAEL Z - A3 B3 - 22.5792 TS

CTAE	L	Z	A5	BP	22.5792	TS
SERIES	VOLTAGE	PACKAGING OPTIONS	OPERATING TEMP.	STABILITY	FREQUENCY	TRI-STATE
CTAE	L = 3.3V	Blank = Bulk Z = Tape and Reel	Blank = 0°C ~ +70°C A5 = -20°C ~ +70°C A3 = -30°C ~ +70°C	B3 = ±2.5 ppm		TS = Tri-State

Specifications:	Min	Typ	Max	Unit
Frequency Range:	1.5		200	MHz
Stability:	- 2.5		+ 2.5	ppm
Supply Voltage:	3.135	3.3	3.465	V
Vdd Rise Time:	100			µS
Operating Temperature:	-30		+ 70	°C
Storage Temperature:	-45°C		+ 85	
Duty Cycle:	45		55	%
Start-Up Time:		3	10	mS
Aging: (ppm/1st Year) Ta=25C, Vdd=3.3V			1	ppm
Supply Current:			130	mA
Short Circuit Current:		± 50		mA
RMS Period Jitter:		10		pS
RMS Integrated Jitter: 12kHz to 20MHz		15		pS
Phase Noise @ 10kHz:			-100	dBc/Hz
Output Voltage: Voh Vol	Vdd - 1.025		 Vdd - 1.62	 V V
Rise/Fall Time:		0.4	0.8	nS
Output Level:		LVPECL		
Packaging:		Tape and Reel 1000 pcs per Reel		

CTAE

Dimensions are in mm

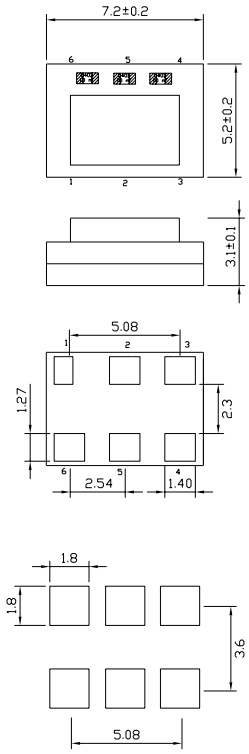

Pin Function
1 Control -Tristate with pull up
2 Do Not Connect
3 Ground
4 Output+
5 Output-
6 Vdd

Tristate internal pull up. Output active when high.

Cardinal Components, Inc.
155 Route 46 West
Wayne, NJ 07470

TEL: (973)785-1333
E-MAIL: sales@cardinalxtal.com
WEB: http://www.cardinalxtal.com

Programmable LVPECL TCXO

Platinum Series CTHE

* LVPECL Output
* Fast Delivery
* Industry Standard Packaging

Applications

* Serial Communications
* Routers
* Switches
* WAN Interfaces
* Test Equipment

RoHS COMPLIANT 2002 / 95 / EC

Part Numbering Example: CTHE Z - A3 B3 - 222.5792 TS

CTHE	Z	A3	B3	222.5792	TS
SERIES	PACKAGING OPTIONS	OPERATING TEMP.	STABILITY	FREQUENCY	TRI-STATE
CTHE	Blank = Bulk Z = Tape and Reel	Blank = 0°C ~ +70°C A5 = -20°C ~ +70°C A3 = -30°C ~ +75°C	B3 = ±2.5 ppm		TS = Tri-State

Specifications:	Min	Typ	Max	Unit
Frequency Range:	200		800	MHz
Stability:	- 2.5		+ 2.5	ppm
Supply Voltage:	3.135	3.3	3.465	V
Vdd Rise Time:	100			µS
Operating Temperature:	-30		+ 75	°C
Storage Temperature:	-45		+ 85	°C
Duty Cycle:	45		55	%
Start-Up Time:			10	
Aging: (ppm/1st Year) Ta=25C, Vdd=3.3V			1	ppm
Supply Current:			140	mA
Short Circuit Current:		± 50		mA
RMS Period Jitter:		15		pS
RMS Integrated Jitter: 12kHz to 20MHz		20		pS
Phase Noise @ 10kHz:			-90	dBc/Hz
Output Voltage: Voh Vol	 Vdd 1.025 		 Vdd 1.62	 V V
Rise/Fall Time:		0.4	0.8	nS
Output Level:		LVPECL		
Packaging:		Tape and Reel 1000 pcs per Reel		

Tristate internal pull up. Output active when high.

CTHE

Dimensions are in mm

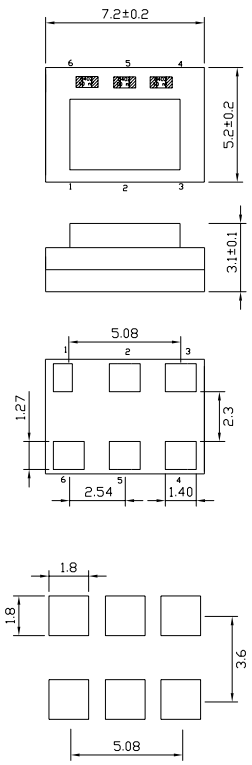

Pin Function
1 Control -Tristate with pull up
2 Do Not Connect
3 Ground
4 Output+
5 Output-
6 Vdd

Cardinal Components, Inc.
155 Route 46 West
Wayne, NJ 07470

TEL: (973)785-1333
E-MAIL: sales@cardinalxtal.com
WEB: http://www.cardinalxtal.com

VCXO SECTION

Page Number	Output Type	VCXO	PCB Mount	Package Dimension (LxWxH) in mm	Package Style	Voltage (V)	Pull Range (ppm)	Freq Range Low (MHz)	Freq Range High (MHz)
V - 1	CMOS	**CAV**	SMD	5x7x1.8	Ceramic	3.3	100	1.5	200
V - 2	CMOS, TTL	**CC121**	SMD	11.4x11.6x3.9	FR4	3.3, 5.0	30,50	8	120
V - 3	CMOS, TTL	**CC127**	SMD	9.6x11.4x2.5	FR4	5	10, 20, 30, 50	9.6	32
V - 4	CMOS	**CC154**	SMD	5x7x1.8	Ceramic	3.3, 5.0	, 20, 50, 80, 1	8	36
V - 5	CMOS	**CC165**	SMD	9.6x13.2x6.7	Plastic	3.3, 5.0	80, 100	8	30
V - 6	LVPECL	**CFVE**	SMD	9x14x3.5	FR4	3.3	100	38	640
V - 7	LVPECL	**CFVED**	SMD	9x14x3.5	FR4	3.3	100	38	640
V - 8	LVDS	**CFVL**	SMD	9x14x3.5	FR4	3.3	100	38	640
V - 9	CMOS, TTL	**CV01**	TH	Full	Can	3.3, 5.0	50-350	1	150
V - 10	CMOS, TTL	**CV04**	TH	Half	Can	3.3, 5.0	50-350	1	40
V - 11	CMOS, TTL	**CVPP**	SMD	9.6x11.4x3.0	FR4	3.3	100	1	200

Cardinal Components, Inc.
155 Route 46 West
Wayne, NJ 07470

TEL: (973)785-1333
E-MAIL: sales@cardinalxtal.com
WEB: http://www.cardinalxtal.com

Programmable CMOS VCXO

CARDINAL COMPONENTS

Platinum Series CAV

* 1.8 mm Max. Height
* Fast Delivery
* HCMOS Output

Applications

* Serial Communications
* Test Equipment
* Industrial Control

Pb RoHS COMPLIANT 2002 / 95 / EC

Part Numbering Example: CAV Z - A6 BP - 22.5792

CAV	Z	A6	BP	22.5792
SERIES	PACKAGING OPTIONS	OPERATING TEMP.	STABILITY	FREQUENCY
CAV	Blank = Bulk Z = Tape and Reel	A6 = 0°C ~ +70°C AB = -30°C ~ +70°C	BP = ±50 ppm	

Specifications:

Frequency Range:	1.500 MHz to 200.000 MHz
Available Stability Options:	±50 ppm
Output Series:	HCMOS
Input Voltage:	+3.3 VDC ±5%
Vdd Rise Time:	Min: 100 µS
Frequency Tuning Range:	±100 ppm
External Control Voltage:	+1.65 VDC, ±1.35 VDC @ 3.3V input
Output Voltage:	HCMOS V_{OL}=10%V_{DD} V Max. HCMOS V_{OH}=90%V_{DD} V Min.
Operating Temperature	0°C to +70°C -30°C to +70°C
Output Load:	15 pF
Maximum Input Current:	40 mA
Maximum Rise/Fall Time:	4 nS
Duty Cycle:	45/55%
Phase Noise@10 kHz:	< -100dBc/Hz
RMS Integrated Jitter: 12kHz to 20MHz	< 20 pS
RMS Period Jitter:	< 10 pS
Storage Temperature:	-40°C to +85°C
Packaging:	Tape and Reel (1K per Reel)

Tristae internal pull up resistor. Output active when high.

CAV

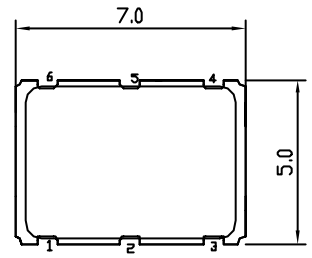

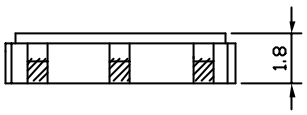

PIN FUNCTION

1 V control

2 OE (WITH PULLUP)
3 GND
4 OUTPUT
5 DO NOT CONNECT
6 VDD

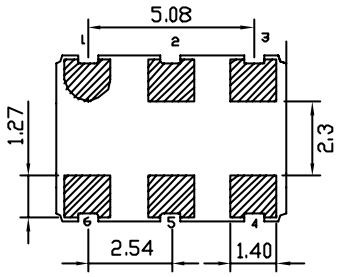

Solder Pad Layout

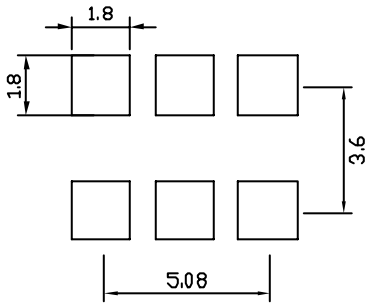

Cardinal Components, Inc.
155 Route 46 West
Wayne, NJ 07470

Rev: V-090414-13

TEL: (973)785-1333
E-MAIL: sales@cardinalxtal.com
WEB: http://www.cardinalxtal.com

Surface Mount VCXO

- *4.0 mm Max. height*
- *Various input supply voltage options*

Series CC121

Pb RoHS COMPLIANT 2002 / 95 / EC

Part Numbering Example: CC121 L Z - A2 BP 45 - 22.5792 A

CC121	L	Z	A2	BP	45	22.5792	A
SERIES	VOLTAGE	PACKAGING OPTIONS	OPERATING TEMP.	STABILITY	SYMMETRY	FREQUENCY	PULL RANGE
CC121	Blank = 5V L = 3.3V	Blank = Bulk Z = Tape and Reel	A2 = -10°C ~+60°C A5 = -20°C ~+70°C	B7 = ±30 ppm BD = ±20 ppm BP = ±50 ppm	Blank = 40/60% 45 = 45/55%		A = ±50 ppm H = ±30 ppm

Specifications:

Frequency Range:	8.000 MHz to 120.000 MHz
Available Stability Options:	±50 ppm ±30 ppm ±20 ppm
Output Series:	TTL/HCMOS
Input Voltage:	+5.0 VDC ±5% +3.3 VDC ±5%
Frequency Tuning Range:	±50 ppm Min. ±30 ppm Min.
External Control Voltage:	+2.5 VDC ± 2.0 VDC @ 5 V INPUT +1.65 VDC ± 1.35 VDC
Output Voltage:	TTL V_{OL}=0.4 V Max. TTL V_{OH}=2.4 V Min. HCMOS V_{OL}=10%V_{DD} V Max. HCMOS V_{OH}=90%V_{DD} V Min.
Operating Temperature Range Options:	-10°C to +60°C -20°C to +70°C
Output Load:	10 LS TTL, 15 pf @ +5 VDC 5 LS TTL, 15 pf @ +3.3 VDC
Maximum Input Current:	30 mA
Duty Cycle:	40/60% 45/55%
Storage Temperature:	-40°C to +85°C
Packaging:	Tape and Reel (1K per Reel)

CC121

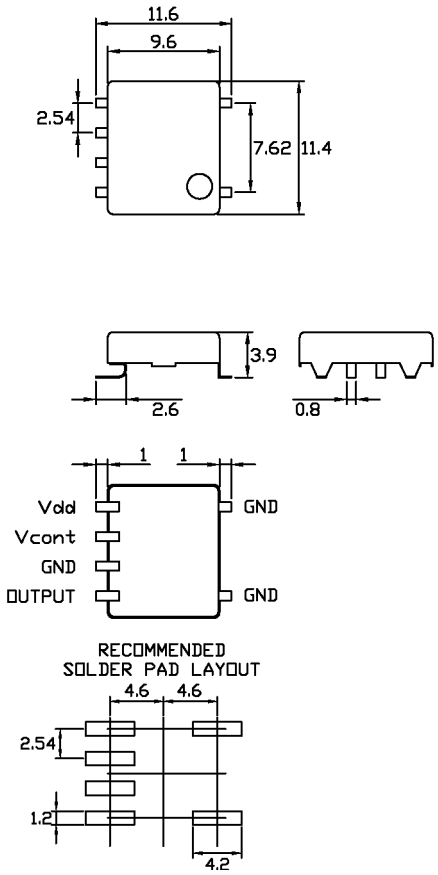

Cardinal Components, Inc.
155 Route 46 West
Wayne, NJ 07470
Rev: V-090414-13

TEL: (973)785-1333
E-MAIL: sales@cardinalxtal.com
WEB: http://www.cardinalxtal.com

Surface Mount VCXO

- *Various stability options*

Series CC127

RoHS COMPLIANT 2002 / 95 / EC

Part Numbering Example: CC127 L Z - A2 B2 45 - 22.5792 A P

CC127	L	Z	A2	B2	45	22.5792	A	P
SERIES	**VOLTAGE**	**PACKAGING OPTIONS**	**OPERATING TEMP.**	**STABILITY**	**SYMMETRY**	**FREQUENCY**	**PULL RANGE**	**LINEARITY**
CC127	Blank = 5V L = 3.3V	Blank = Bulk Z = Tape and Reel	A2 = -10°C ~ +60°C A5 = -20°C ~ +70°C A6 = 0°C ~ +70°C A7 = -40°C ~ +85°C A9 = 0°C ~ +50°C AA = -10°C ~ +70°C AF = 0°C ~ +60°C	B7 = ±30 ppm BC = ±15 ppm BD = ±20 ppm BE = ±10 ppm BP = ±50 ppm	Blank = 40/60% 45 = 45/55%		A = ±50 ppm H = ±30 ppm K = ±20 ppm L = ±10 ppm	Blank = ±20% Q = ±15% P = ±10%

Specifications:

Frequency Range:	9.600 MHz to 32.000 MHz
Available Stability Options:	±50 ppm ±30 ppm ±20 ppm ±15 ppm ±10 ppm
Output Series:	HCMOS/TTL
Input Voltage:	+5.0 VDC ±5%, +3.3 VDC ±5%
Frequency Tuning Range:	±10 ppm Min. ±30 ppm Min. ±50 ppm Min. ±15 ppm Min. ±20 ppm Min.
External Control Voltage:	+2.5 VDC, ±2.0 VDC, +3.3 VDC, ±1.65 VDC, ±1.35 VDC,
Linearity:	±20% ±15% ±10%
Output Voltage:	TTL V_{OL}=0.4 V Max. TTL V_{OH}=2.4 V Min. HCMOS V_{OL}=10%V_{DD} V Max. HCMOS V_{OH}=90%V_{DD} V Min.
Operating Temperature	0°C to +70°C -10°C to +70°C -20°C to +70°C -40°C to +85°C
Output Load:	10 LS TTL, 15 pf HCMOS
Maximum Input Current:	80 mA
Maximum Rise/Fall Time:	10 ns
Duty Cycle:	40/60% 45/55%
Max. Start-Up Time:	10 ms
Storage Temperature:	-40°C to +85°C
Packaging:	Tape and Reel (1K per Reel)

CC127

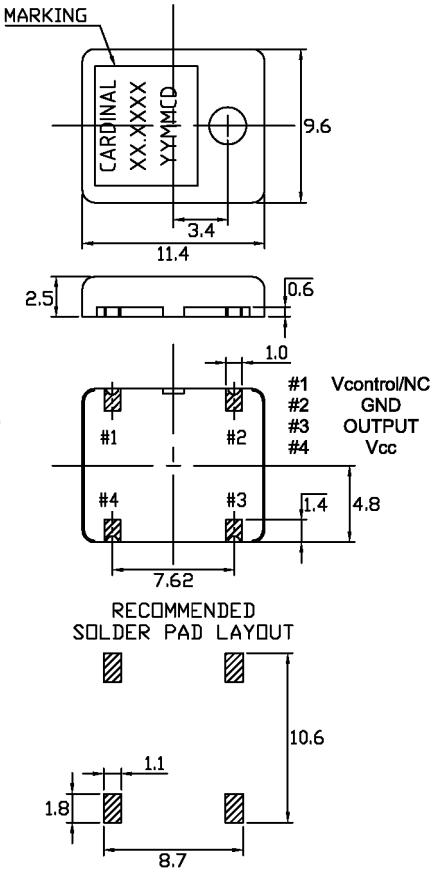

Ceramic Surface Mount VCXO

- *1.8 mm max. height*
- *Tri-State Control*

Series CC154

Pb RoHS COMPLIANT 2002 / 95 / EC

Part Numbering Example: CC154 L Z - A6 BP 45 - 22.5792 TS B

CC154	L	Z	A6	BP	45	22.5792	TS	B
SERIES	**VOLTAGE**	**PACKAGING OPTIONS**	**OPERATING TEMP.**	**STABILITY**	**SYMMETRY**	**FREQUENCY**	**TRI-STATE**	**PULL RANGE**
CC154	Blank = 5V L = 3.3V	Blank = Bulk Z = Tape and Reel	A6 = 0°C ~ +70°C	BP = ±50 ppm	Blank = 40/60% 45 = 45/55%		TS = Tri-State	B = ±100 ppm N = ±80 ppm A = ±50 ppm

Specifications:

Frequency Range:	8.000 MHz to 36.000 MHz
Available Stability Options:	±50 ppm
Output Series:	HCMOS
Input Voltage:	+5.0 VDC ±5% +3.3 VDC ±5%
Frequency Tuning Range:	±100 ppm @ 5.0V ±80 ppm @ 3.3VDC ±50 ppm ±15 ppm ±20 ppm
External Control Voltage:	+2.5 VDC, ±2.0 VDC @ 5V input +1.65 VDC, ±1.35 VDC @ 3.3V input
Tristate Input:	@+5 VDC Input +0.80 VDC Max. to Disable +3.60 VDC Min. to Enable or open to Enable @3.3 VDC & 3.0 VDC Input +0.80 VDC Max. to Disable +2.20 VDC Min. to Enable or open to Enable
Output Voltage:	HCMOS V_{OL}=10%V_{DD} V Max. HCMOS V_{OH}=90%V_{DD} V Min.
Operating Temperature	0°C to +70°C
Output Load:	15 pf
Maximum Input Current:	30 mA
Maximum Rise/Fall Time:	8 ns
Duty Cycle:	40/60% 45/55%
Storage Temperature:	-40°C to +85°C
Packaging:	Tape and Reel (1K per Reel)

CC154

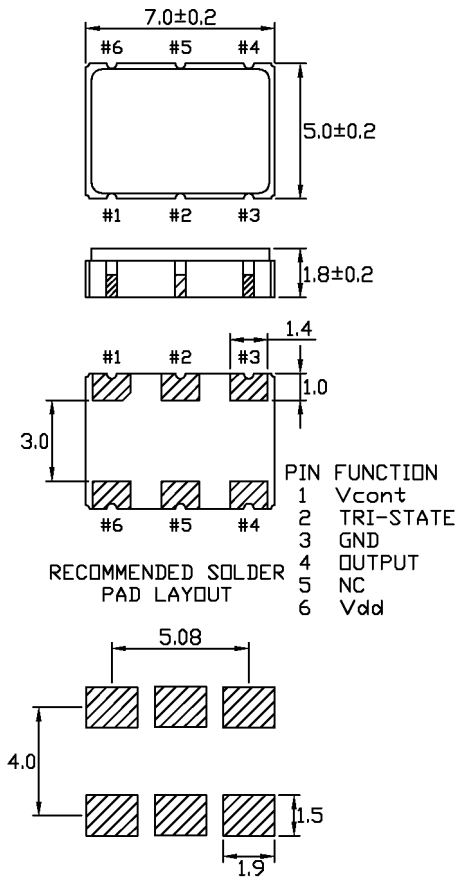

Cardinal Components, Inc.
155 Route 46 West
Wayne, NJ 07470
Rev: V-090414-13

TEL: (973)785-1333
E-MAIL: sales@cardinalxtal.com
WEB: http://www.cardinalxtal.com

Surface Mount VCXO

- *Plastic package*

Series CC165

Pb RoHS COMPLIANT 2002 / 95 / EC

Part Numbering Example: CC165 L Z - A6 BP 45 - 22.5792 A

CC165	L	Z	A6	BP	45	22.5792	A
SERIES	**VOLTAGE**	**PACKAGING OPTIONS**	**OPERATING TEMP.**	**STABILITY**	**SYMMETRY**	**FREQUENCY**	**PULL RANGE**
CC165	Blank = 5V L = 3.3V	Blank = Bulk Z = Tape and Reel	A6 = -0°C ~+70°C	B7 = ±30 ppm BD = ±20 ppm BP = ±50 ppm	Blank = 40/60% 45 = 45/55%		H = ±80 ppm B = ±100 ppm

Specifications:

Frequency Range:	8.000 MHz to 30.000 MHz
Available Stability Options:	±50 ppm
Output Series:	TTL/HCMOS
Input Voltage:	+5.0 VDC ±5% +3.3 VDC ±5%
Frequency Tuning Range:	±80 ppm Min. (3.3Vdc) ±100 ppm Min.(5.0Vdc)
External Control Voltage:	+2.5 VDC ± 2.0 VDC @ 5 V INPUT +1.65 VDC ± 1.35 VDC @ INPUT
Output Voltage:	HCMOS V_{OL}=10%V_{DD} V Max. HCMOS V_{OH}=90%V_{DD} V Min.
Operating Temperature Range Options:	-0°C to +60°C
Output Load:	15 pf @ +5 VDC 15 pf @ +3.3 VDC
Maximum Input Current:	30 mA
Duty Cycle:	40/60% 45/55%
Storage Temperature:	-50°C to +125°C
Packaging:	Tape and Reel (1K per Reel)

CC165

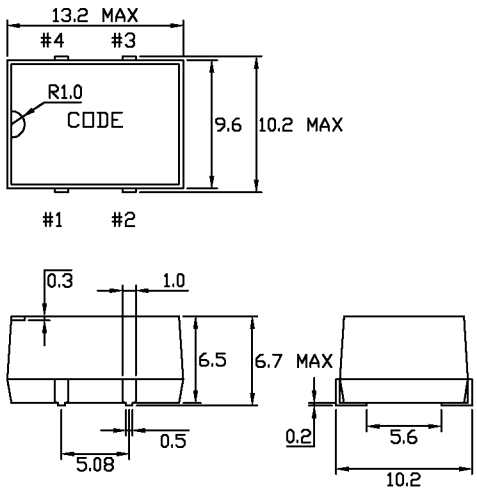

RECOMMENDED SOLDER PAD LAYOUT

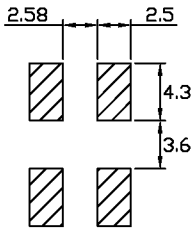

PINOUT
1 NC/TRI-STATE
2 GND
3 OUTPUT
4 Vcc

Cardinal Components, Inc.
155 Route 46 West
Wayne, NJ 07470
Rev: V-090414-13

TEL: (973)785-1333
E-MAIL: sales@cardinalxtal.com
WEB: http://www.cardinalxtal.com

LVPECL Surface Mount VCXO

* LVPECL Output
* Industry Standard Outline

Applications
* Serial Communications
* Routers
* Switches
* WAN Interfaces
* Test Equipment

Series CFVE

RoHS COMPLIANT 2002 / 95 / EC

Part Numbering Example: CFVE Z - A5 BP - 222.5792 TS

CFVE	Z	A5	BP	222.5792	TS
SERIES	PACKAGING OPTIONS	OPERATING TEMP.	STABILITY	FREQUENCY	TRI-STATE
CFVE	Blank = Bulk Z = Tape and Reel	Blank = 0°C ~ +70°C A5 = -20°C ~ +70°C A7 = -40°C ~ +85°C	BP = ±50 ppm		TS = Tri-State

Specifications:	Min	Typ	Max	Unit
Frequency Range:	38		640	MHz
Stability:	-50		+ 50	ppm
Supply Voltage:	3.135	3.3	3.465	V
Frequency Tuning Range:		±100		ppm
External Control Voltage:	0.35		3.0	V
Operating Temperature:	-40		+ 85	°C
Storage Temperature:	-55		+ 125	°C
Duty Cycle:	45		55	%
Start-Up Time:		3	10	mS
Aging: (ppm/1st Year) Ta=25C, Vdd=3.3V			5	ppm
Supply Current:			100	mA
Short Circuit Current:		± 50		mA
RMS Period Jitter:		5		pS
RMS Integrated Jitter: 12kHz to 20MHz		0.7		pS
Phase Noise @ 10kHz:			-120	dBc/Hz
Output Voltage: Voh Vol	Vdd - 1.025		 Vdd - 1.62	 V V
Rise/Fall Time:		0.4	0.8	nS
Output Level:		LVPECL		
Packaging:	Tape and Reel 1000 pcs per Reel			

"Tristate internal pull up. Output active when high"

CFVE

Dimensions are in mm

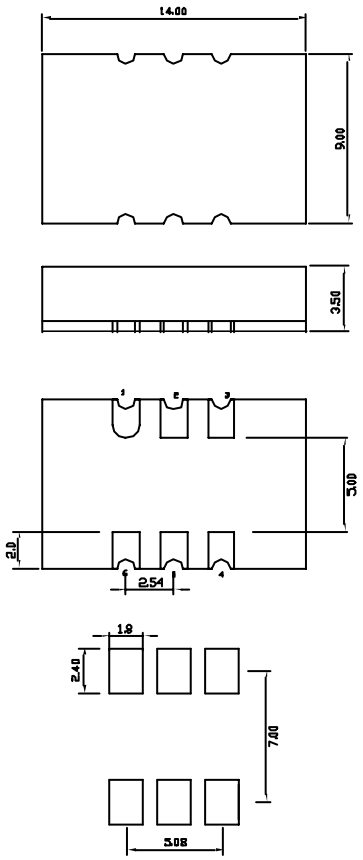

PIN Function
1 VCONTROL
2 ENABLE
3 Ground
4 LVPECL +
5 LVPECL -
6 Vdd

LVPECL Levels Test Circuit

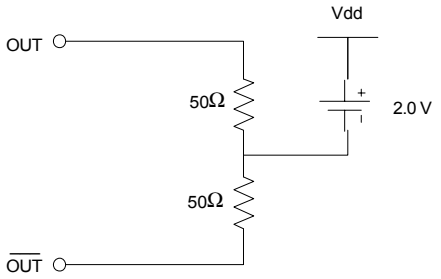

Cardinal Components, Inc.
155 Route 46 West
Wayne, NJ 07470
Rev: V-090414-13

TEL: (973)785-1333
E-MAIL: sales@cardinalxtal.com
WEB: http://www.cardinalxtal.com

LVPECL Surface Mount VCXO

Series CFVED

* LVPECL Output
* Industry Standard Outline

Applications
* Serial Communications
* Routers
* Switches
* WAN Interfaces
* Test Equipment

Pb RoHS COMPLIANT 2002 / 95 / EC

Part Numbering Example: CFVED Z - A5 BP - 222.5792 TS

CFVED	Z	A5	BP	222.5792	TS
SERIES	PACKAGING OPTIONS	OPERATING TEMP.	STABILITY	FREQUENCY	TRI-STATE
CFVED	Blank = Bulk Z = Tape and Reel	Blank = 0°C ~ +70°C A5 = -20°C ~ +70°C A7 = -40°C ~ +85°C	BP = ±50 ppm		TS = Tri-State

Specifications:

	Min	Typ	Max	Unit
Frequency Range:	38		640	MHz
Stability:	-50		+ 50	ppm
Supply Voltage:	3.135	3.3	3.465	V
Frequency Tuning Range:		±100		ppm
External Control Voltage:	0.35		3.0	V
Operating Temperature:	-40		+ 85	°C
Storage Temperature:	-55		+ 125	°C
Duty Cycle:	45		55	%
Start-Up Time:		3	10	mS
Aging: (ppm/1st Year) Ta=25C, Vdd=3.3V			5	ppm
Supply Current:			100	mA
Short Circuit Current:		± 50		mA
RMS Period Jitter:		5		pS
RMS Integrated Jitter: 12kHz to 20MHz		0.7		pS
Phase Noise @ 10kHz:			-120	dBc/Hz
Output Voltage: Voh Vol	 Vdd - 1.025		 Vdd - 1.62	 V V
Rise/Fall Time:		0.4	0.8	nS
Output Level:		LVPECL		
Packaging:		Tape and Reel 1000 pcs per Reel		

Tristate internal pull up. Output active when low.

CFVED

Dimensions are in mm

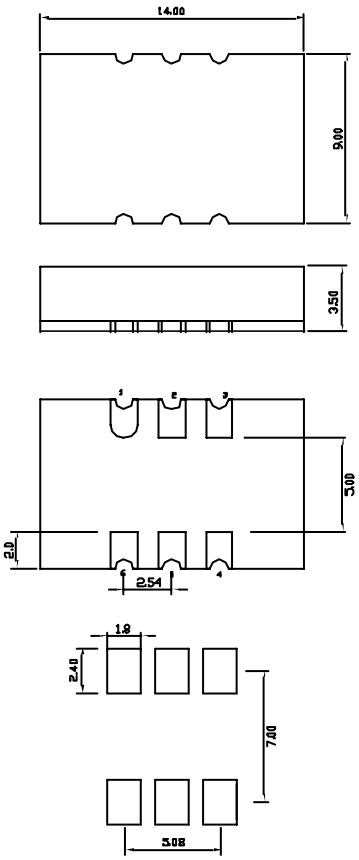

PIN Function
1 VCONTROL
2 DISABLE
3 Ground
4 LVPECL +
5 LVPECL -
6 Vdd

LVPECL Levels Test Circuit

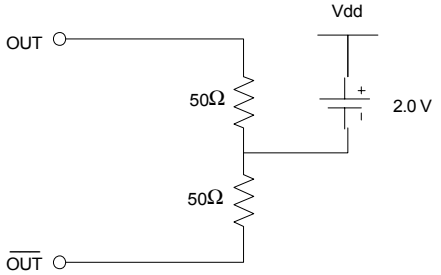

Cardinal Components, Inc.
155 Route 46 West
Wayne, NJ 07470

TEL: (973)785-1333
E-MAIL: sales@cardinalxtal.com
WEB: http://www.cardinalxtal.com

LVDS Surface Mount VCXO

* LVDS Output
* Industry Standard Outline

Applications
* Serial Communications
* Routers
* Switches
* WAN Interfaces
* Test Equipment

Series CFVL

RoHS COMPLIANT 2002 / 95 / EC

Part Numbering Example: CFVL Z - A5 BP - 222.5792 TS

CFVL	Z	A5	BP	222.5792	TS
SERIES	PACKAGING OPTIONS	OPERATING TEMP.	STABILITY	FREQUENCY	TRI-STATE
CFVL	Blank = Bulk Z = Tape and Reel	Blank = 0°C ~ +70°C A5 = -20°C ~ +70°C A7 = -40°C ~ +85°C	BP = ±50 ppm		TS = Tri-State

Specifications:	Min	Typ	Max	Unit
Frequency Range:	38		640	MHz
Stability:	-50		+ 50	ppm
Supply Voltage:	3.135	3.3	3.465	V
Frequency Tuning Range:		± 100		ppm
External Control Voltage:	0.35		3.0	V
Operating Temperature:	-40		+ 85	°C
Storage Temperature:	-55		+ 125	°C
Duty Cycle:	45		55	%
Start-Up Time:		3	10	mS
Aging: (ppm/1st Year) Ta=25C, Vdd=3.3V			5	ppm
Supply Current:			100	mA
Short Circuit Current:		± 50		mA
RMS Period Jitter:		5		pS
RMS Integrated Jitter: 12kHz to 20MHz		0.7		pS
Phase Noise @ 10kHz:			-120	dBc/Hz
Output Voltage: Voh Vol	 Vdd - 0.9		 Vdd - 1.6	 V V
Output Differential Voltage:	247	355	454	mV
Rise/Fall Time:		0.4	0.8	nS
Output Level:		LVDS		
Packaging:		Tape and Reel 1000 pcs per Reel		

"Tristate internal pull up. Output active when high"

CFVL

Dimensions are in mm

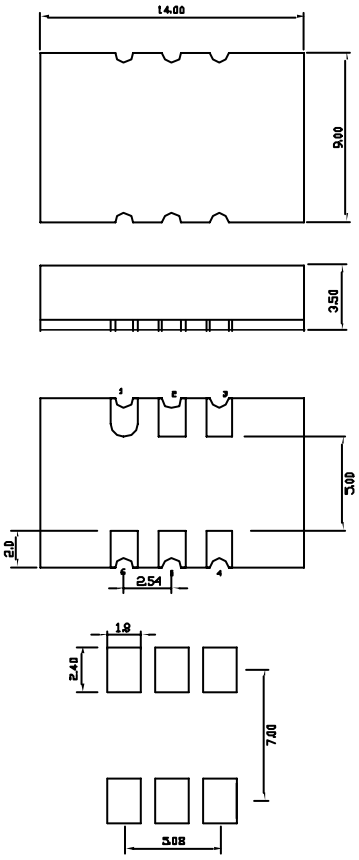

PIN Function
1 VCONTROL
2 ENABLE
3 Ground
4 LVDS +
5 LVDS -
6 Vdd

LVDS Levels Test Circuit

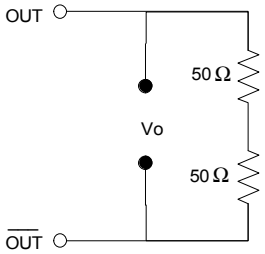

Cardinal Components, Inc.
155 Route 46 West
Wayne, NJ 07470
Rev: V-090414-13

TEL: (973)785-1333
E-MAIL: sales@cardinalxtal.com
WEB: http://www.cardinalxtal.com

Thru Hole VCXO

- *Wide frequency range*
- *Extended temperature range and tight symmetry available*
- *Broad range of pullability*

Series CV01

Pb RoHS COMPLIANT 2002 / 95 / EC

Part Numbering Example: CV01 L - A3 B3 - 15.360 A P

CV01	L	A3	B3	15.360	A	P
SERIES	VOLTAGE	OPERATING TEMP.	STABILITY	FREQUENCY	TUNING RANGE	LINEARITY
CV01	Blank = 5.0V L = 3.3V	A1=-10°C ~ +50°C A2=-10°C ~ +60°C A3=-30°C ~ +75°C A4=-40°C ~ +75°C A6=-0°C~+70°	B6 = ±100 ppm BP = ±50 ppm BR = ±25 ppm		A = ±50 ppm B = ±100 ppm C = ±150 ppm D = ±200 ppm E = ±250 ppm F = ±300 ppm G = ±350 ppm	Blank = ±20% Q = ±15% P = ±10%

Specifications:

Frequency Range:	1.000 MHz to 150.000 MHz
Available Stability Options:	±100 ppm ±50 ppm ±25 ppm
Output Series:	TTL/HCMOS
Input Voltage:	+5.0 VDC ±5% +3.3 VDC ±5%
Frequency Tuning Range:	±50 ppm ±100 ppm ±150 ppm ±200 ppm ±250 ppm ±300 ppm ±350 ppm
External Control Voltage:	+2.5 VDC ±2.0 VDC (5V) +1.65 VDC @ ±1.35VDC
Linearity:	±20% Max. ±15% Max. ±10% Max.
Polarity of Freq. Slope:	Positive
Output Voltage:	TTL V_{OL}=0.4 V Max. TTL V_{OH}=2.4 V Min. HCMOS V_{OL}=10%V_{DD} V Max. HCMOS V_{OH}=90%V_{DD} V Min.
Operating Temperature Range Options:	-0°C to +70°C -40°C to +85°C
Output Load:	10 TTL 15 pf HCMOS
Maximum Input Current:	20 mA (1.000 to 20.000 MHz) 40 mA (20.010 to 50.000 MHz) 50 mA (50.010 to 160.000 MHz)
Maximum Rise/Fall Time:	10 ns
Duty Cycle:	40/60% 45/55%
Max Start-Up Time:	10 ms
Storage Temperature:	-55°C to +125°C

CVO1

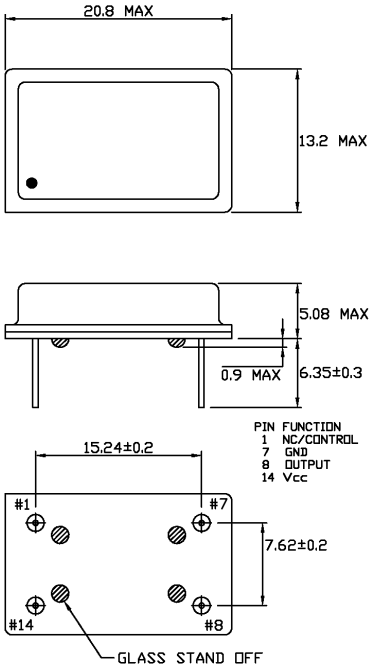

Cardinal Components, Inc.
155 Route 46 West
Wayne, NJ 07470
Rev: V-090414-13

TEL: (973)785-1333
E-MAIL: sales@cardinalxtal.com
WEB: http://www.cardinalxtal.com

Thru Hole VCXO

- *Half-size dip package*
- *Tight symmetry option*

Series CV04

Pb RoHS COMPLIANT 2002 / 95 / EC

Part Numbering Example: CV04 L - A3 B3 - 15.360 A P

CV04	L	A3	B3	15.360	A	P
SERIES	VOLTAGE	OPERATING TEMP.	STABILITY	FREQUENCY	TUNING RANGE	LINEARITY
CV04	Blank = 5.0V L = 3.3V	A1=-10°C ~ +50°C A2=-10°C ~ +60°C A3=-30°C ~ +75°C A4=-40°C ~ +75°C A6=-0°C~+70°C	BC =±100 ppm BP = ±50 ppm BR = ±25 ppm		A = ±50 ppm B = ±100 ppm C = ±150 ppm D = ±200 ppm E = ±250 ppm F = ±300 ppm G = ±350 ppm	Blank = ±20% Q = ±15% P = ±10%

Specifications:

Frequency Range:	1.000 MHz to 40.000 MHz
Available Stability Options:	±100 ppm ±50 ppm ±25 ppm
Output Series:	TTL/HCMOS
Input Voltage:	+5.0 VDC ±5% +3.3 VDC ±5%
Frequency Tuning Range:	±50 ppm Min. ±100 ppm Min. ±150 ppm Min. ±200 ppm Min. ±250 ppm Min. ±300 ppm Min. ±350 ppm Min.
External Control Voltage:	+2.5 VDC ±2.0 VDC (5V) +1.65 VDC @ ±1.35 VDC
Linearity:	±20% Max. ±15% Max. ±10% Max.
Polarity of Freq. Slope:	Positive
Output Voltage:	TTL V_{OL}=0.4 V Max. TTL V_{OH}=2.4 V Min. HCMOS V_{OL}=10%V_{DD} V Max. HCMOS V_{OH}=90%V_{DD} V Min.
Operating Temperature Range Options:	-0°C to +70°C -40°C to +85°C
Output Load:	10 TTL 15 pf HCMOS
Maximum Input Current:	20 mA (1.000 to 20.000 MHz) 40 mA (20.010 to 50.000 MHz) 50 mA (50.010 to 160.000 MHz)
Maximum Rise/Fall Time:	10 ns
Duty Cycle:	40/60% 45/55%
Max Start-Up Time:	10 ms
Storage Temperature:	-55°C to +125°C

CVO4

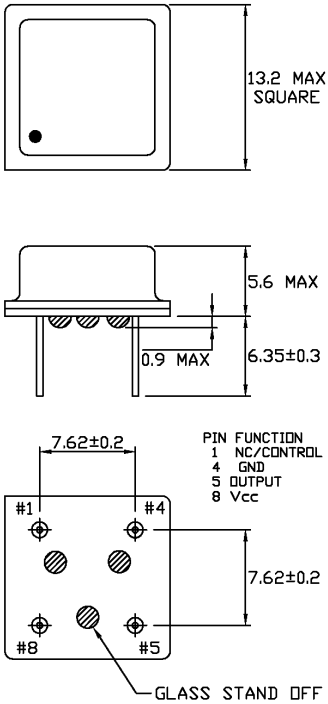

Cardinal Components, Inc.
155 Route 46 West
Wayne, NJ 07470
Rev: V-090414-13

TEL: (973)785-1333
E-MAIL: sales@cardinalxtal.com
WEB: http://www.cardinalxtal.com

Programmable VCXO

• 9.6 x 11.4 SMD

Series **CVPP**

RoHS COMPLIANT 2002 / 95 / EC

Part Numbering Example: CVPPZ - 100.0

CVPP	Z	100.0
SERIES	ADDED FEATURES	FREQUENCY
	Blank = Bulk T = Tube Z = Tape/Reel	1.0 – 200.0

Specifications:	Min	Typ	Max	Unit
Frequency Range:	1.0		200.0	MHz
Stability Options	-50		50	ppm
Programmable Input Voltage	3.135	3.3	3.465	V
Operating Temperature Range Options:	-30		75	°C
Storage Temperature:	-55		125	°C
Aging (PPM/1st Year): Ta=25C, Vdd=3.3V			± 5	
Pull Range	-100		100	
Supply Current		40		mA
Frequency Tuning Range		74		ppm/V
Start-Up Time		3	10	ms
Programmable Output Level:	CMOS			

CVPP

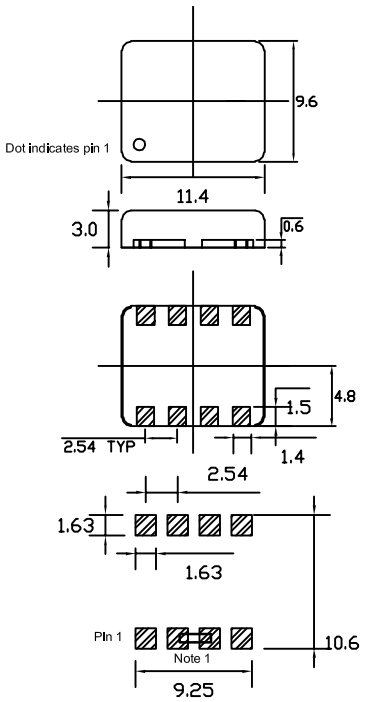

Recommended solder pad layout

Note 1: Connect pin 2 to pin 3

Tristate internal pull up. Output active when high.

PIN FUNCTION
PIN 1 OE
PIN 2 CONNECT TO PIN 3
PIN 3 CONNECT TO PIN 2
PIN 4 GND
PIN 5 OUTPUT
PIN 6 VCONTROL
PIN 7 FACTORY USE (MAKE NO CONNECTION)
PIN 8 VDD

Notes: Recommended .01 µF bypass capacitor from Vcc to GND. Capacitor should be as close to oscillator as possible.

Cardinal Components, Inc.
155 Route 46 West
Wayne, NJ 07470
Rev: V-090414-13

TEL: (973)785-1333
E-MAIL: sales@cardinalxtal.com
WEB: http://www.cardinalxtal.com

VC-TCXO SECTION

Page Number	Output Type	VC-TCXO	PCB Mount	Package Dimension (LxWxH) in mm	Package Style	Voltage (V)	Pull Range (ppm)	Stability	Freq Range Low (MHz)	Freq Range High (MHz)
VT - 1	CMOS, TTL	**CC123**	SMD	11.7x18.3x4.7	FR4	3.0, 5.0	5.0, 10.0	1.5 - 5.0	1	35
VT - 2	CMOS	**CC129**	SMD	9.6x11.4x4.0	FR4	5	5.0, 10.0	1.5 - 5.0	1	35
VT - 3	Clipped Sine	**CC133**	SMD	11.7x18.3x4.5	FR4	5	5.0, 10.0	1.5 - 5.0	1	35
VT - 4	CMOS, TTL	**CC134**	SMD	11.7x18.3x4.5	FR4	3.3, 5.0	5.0, 10.0	1.5 - 5.0	1	35
VT - 5	Clipped Sine	**CC142**	SMD	8,5x13.4x5.0	FR4	3.3, 5.0	5.0, 10.0	1.5 - 5.0	10	35
VT - 6	Clipped Sine	**CTV4**	SMD	9.6x11.4x4.0	FR4	3.0 - 5.0	4	2.5	12	19.6
VT - 7	Clipped Sine	**CTV6**	SMD	9.6x11.4x4.0	FR4	3.0 - 5.0	4	2.5	12	19.6
VT - 8	LVPECL	**CTVED**	SMD	9.6x14x3.5	FR4	3.3	8	2.5	38	640
VT - 9	LVDS	**CTVL**	SMD	9.6x14x3.5	FR4	3.3	8	2.5	38	640
VT - 10	Clipped Sine	**CTX5V**	SMD	9.6x11.4x3.9	FR4	3.0 - 5.0	4	2.5	12	19.6
VT - 11	Clipped Sine	**CTX8V**	SMD	11.7x18.3x4.7	FR4	5	8.0 - 15.0	2.5, 3.0, 5.0	9.6	32

Cardinal Components, Inc.
155 Route 46 West
Wayne, NJ 07470

TEL: (973)785-1333
E-MAIL: sales@cardinalxtal.com
WEB: http://www.cardinalxtal.com

Thru Hole Mount VC-TCXO

Series CC123

- *4.5 mm height*
- *Tight stability available*
- *TTL/HCMOS output*

Pb RoHS COMPLIANT 2002 / 95 / EC

Part Numbering Example: CC123 L - A1 B2 45 - 22.5792 M

CC123	L	A1	B2	45	22.5792	M
SERIES	VOLTAGE	OPERATING TEMP.	STABILITY	SYMMETRY	FREQUENCY	PULL RANGE
CC123	Blank = 5V L = 3.3V	A2 = -10°C ~+60°C A3 = -30°C ~+75°C A5 = -20°C ~+70°C A9 = 0°C ~+50°C AA = -10°C ~+70°C AB = -30°C ~+70°C AC = -30°C ~+60°C AE = -40°C ~+80°C	B1 = ±5.0 ppm B2 = ±3.0 ppm B3 = ±2.5 ppm B4 = ±2.0 ppm B5 = ±1.5 ppm B9 = ±4.0 ppm BB = ±4.5 ppm BF = ±3.5 ppm	Blank = 40/60% 45 = 45/55%		L = ±10 ppm M = ±5 ppm

Specifications:

Frequency Range:	1.000 MHz to 35.000 MHz
Available Stability Options:	±1.5 ppm ±2.0 ppm ±2.5 ppm ±3.0 ppm ±3.5 ppm ±4.0 ppm ±4.5 ppm ±5.0 ppm
Output Series:	TTL/CMOS
Input Voltage:	+5.0 VDC ±5%, +3.3 VDC ±5%
Operating Temperature Range Options:	0°C to +50°C -10°C to +60°C -10°C to +70°C -20°C to +70°C -30°C to +60°C -30°C to +70°C -30°C to +75°C -40°C to +80°C
Frequency Tuning Range:	±5 ppm Min. ±10 ppm Min.
External Control Voltage:	+2.5 VDC, ± 2.0 VDC, +1.65 VDC, ± 1.35VDC
Output Voltage:	TTL V_{OL}=0.4 V Max. TTL V_{OH}=2.4 V Min. HCMOS V_{OL}=10%V_{DD} V Max. HCMOS V_{OH}=90%V_{DD} V Min.
Frequency Trim Range With Externally Adjustable Trimmer:	±3.0 ppm Minimum
Output Load:	10 LS TTL, 15 pf CMOS
Maximum Input Current:	20 mA
Maximum Rise/Fall Time:	10 ns
Duty Cycle:	40/60%
Maximum Frequency Aging at +25°C:	±1 ppm/yr
Storage Temperature:	-40°C to +80°C

CC123

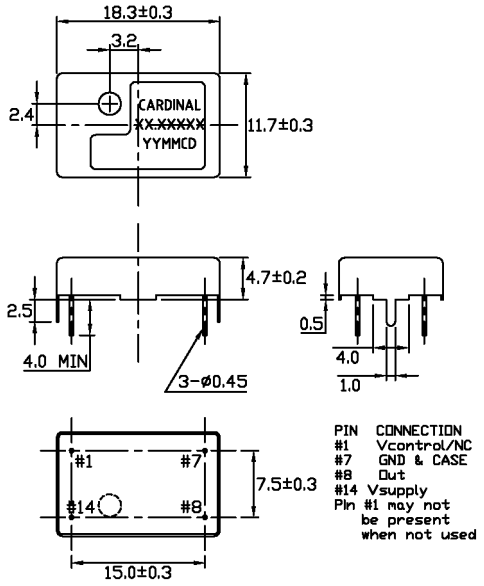

Cardinal Components, Inc.
155 Route 46 West
Wayne, NJ 07470

TEL: (973)785-1333
E-MAIL: sales@cardinalxtal.com
WEB: http://www.cardinalxtal.com

Surface Mount VC-TCXO

Series CC129

- *4.0 mm height*
- *Tight stability available*
- *TTL/HCMOS output*

RoHS COMPLIANT 2002 / 95 / EC

Part Numbering Example: CC129 L Z - A2 B2 45 - 22.5792 M

CC129	L	Z	A2	B2	45	22.5792	M
SERIES	**VOLTAGE**	**PACKAGING OPTIONS**	**OPERATING TEMP.**	**STABILITY**	**SYMMETRY**	**FREQUENCY**	**PULL RANGE**
CC129	Blank = 5V L = 3.3V	Blank = Bulk Z = Tape and Reel	A2 = -10°C ~+60°C A3 = -30°C ~+75°C A5 = -20°C ~+70°C A9 = 0°C ~+50°C AA = -10°C ~+70°C AB = -30°C ~+70°C AC = -30°C ~+60°C AE = -40°C ~+80°C	B1 = ±5.0 ppm B2 = ±3.0 ppm B3 = ±2.5 ppm B4 = ±2.0 ppm B5 = ±1.5 ppm B9 = ±4.0 ppm BB = ±4.5 ppm BF = ±3.5 ppm	Blank = 40/60% 45 = 45/55%		L = ±10 ppm M = ±5 ppm

Specifications:

Frequency Range:	1.000 MHz to 35.000 MHz	
Available Stability Options:	±1.5 ppm ±2.0 ppm ±2.5 ppm ±3.0 ppm ±3.5 ppm ±4.0 ppm ±4.5 ppm ±5.0 ppm	
Output Series:	TTL/CMOS	
Input Voltage:	+5.0 VDC ±5%	+3.3 VDC ±5%
Operating Temperature Range Options:	0°C to +50°C -10°C to +60°C -10°C to +70°C -20°C to +70°C -30°C to +60°C -30°C to +70°C -30°C to +75°C -40°C to +80°C	
Frequency Tuning Range:	±5 ppm Min. ±10 ppm Min.	
External Control Voltage:	+2.5 VDC, ± 2.0 VDC	+1.65 VDC, ± 1.35VDC
Output Voltage:	TTL V_{OL}=0.4 V Max. TTL V_{OH}=2.4 V Min. HCMOS V_{OL}=10%V_{DD} V Max. HCMOS V_{OH}=90%V_{DD} V Min.	
Frequency Trim Range With Externally Adjustable Trimmer:	±3.0 ppm Minimum	
Output Load:	10 LS TTL, 15 pf CMOS	
Maximum Input Current:	20 mA	
Maximum Rise/Fall Time:	10 ns	
Duty Cycle:	40/60% 45/55%	
Maximum Frequency Aging at +25°C:	±1 ppm/yr	
Storage Temperature:	-40°C to +80°C	
Packaging:	Tape and Reel (1K per Reel)	

CC129

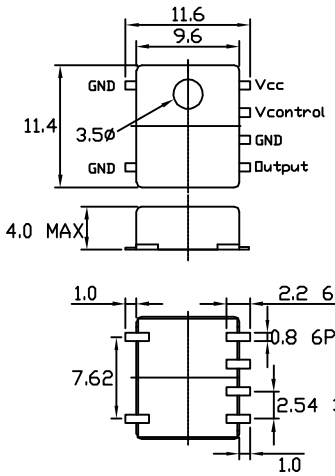

RECOMMENDED SOLDER PAD LAYOUT

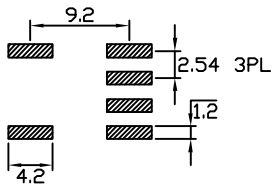

Cardinal Components, Inc.
155 Route 46 West
Wayne, NJ 07470
Rev: VT-090414-13

TEL: (973)785-1333
E-MAIL: sales@cardinalxtal.com
WEB: http://www.cardinalxtal.com

Surface Mount VC-TCXO

Series CC133

- *4.5 mm height*
- *Tight stability available*
- *Sinewave output*

Pb RoHS COMPLIANT 2002 / 95 / EC

Part Numbering Example: CC133 L Z - A1 B2 - 22.5792 M

CC133	L	Z	A1	B2	22.5792	M
SERIES	VOLTAGE	PACKAGING OPTIONS	OPERATING TEMP.	STABILITY	FREQUENCY	PULL RANGE
CC133	Blank = 5V L = 3.3V	Blank = Bulk Z = Tape and Reel	A2 = -10°C ~+60°C A3 = -30°C ~+75°C A5 = -20°C ~+70°C A9 = 0°C ~+50°C AA = -10°C ~+70°C AB = -30°C ~+70°C AC = -30°C ~+60°C AE = -40°C ~+80°C	B1 = ±5.0 ppm B2 = ±3.0 ppm B3 = ±2.5 ppm B4 = ±2.0 ppm B5 = ±1.5 ppm B9 = ±4.0 ppm BB = ±4.5 ppm BF = ±3.5 ppm		L = ±10 ppm M = ±5 ppm

Specifications:

Frequency Range:	1.000 MHz to 35.000 MHz	
Available Stability Options:	±1.5 ppm ±2.0 ppm ±2.5 ppm ±3.0 ppm ±3.5 ppm ±4.0 ppm ±4.5 ppm ±5.0 ppm	
Output Series:	Clipped Sine	
Input Voltage:	+5.0 VDC ±5%	+3.3 VDC ±5%
Operating Temperature Range Options:	0°C to +50°C -10°C to +60°C -10°C to +70°C -20°C to +70°C -30°C to +60°C -30°C to +70°C -30°C to +75°C -40°C to +80°C	
Frequency Tuning Range:	±5 ppm Min. ±10 ppm Min.	
External Control Voltage:	+2.5 VDC, ±2.0 VDC	+1.65 VDC, ± 1.35VDC
Output Voltage:	1.0 Volt Peak To Peak Minimum	
Frequency Trim Range With Externally Adjustable Trimmer:	±3.0 ppm Minimum	
Output Load:	20K OHM Parallel with 5 pf	
Maximum Input Current:	3 mA	
Maximum Frequency Aging at +25°C:	±1 ppm/yr	
Storage Temperature:	-40°C to +80°C	
Packaging:	Tape and Reel (1K per Reel)	

CC133

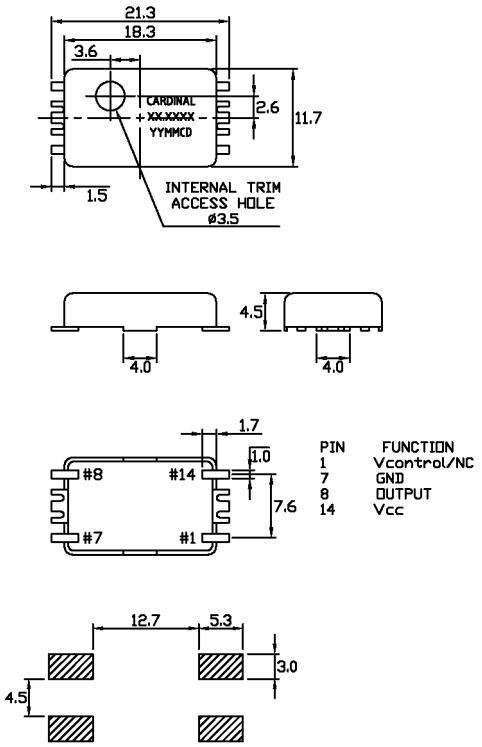

Cardinal Components, Inc.
155 Route 46 West
Wayne, NJ 07470

TEL: (973)785-1333
E-MAIL: sales@cardinalxtal.com
WEB: http://www.cardinalxtal.com

Surface Mount VC-TCXO

Series CC134

- *4.5 mm height*
- *Tight stability available*
- *HCMOS/TTL*

Pb RoHS COMPLIANT 2002 / 95 / EC

Part Numbering Example: CC134 L Z - A2 B2 45 - 22.5792 M

CC134	L	Z	A2	B2	45	22.5792	M
SERIES	**VOLTAGE**	**PACKAGING OPTIONS**	**OPERATING TEMP.**	**STABILITY**	**SYMMETRY**	**FREQUENCY**	**PULL RANGE**
CC134	Blank = 5V L = 3.3V	Blank = Bulk Z = Tape and Reel	A2 = -10°C ~+60°C A3 = -30°C ~+75°C A5 = -20°C ~+70°C A9 = 0°C ~+50°C AA = -10°C ~+70°C AC = -30°C ~+60°C AE = -40°C ~+80°C	B1 = ±5.0 ppm B2 = ±3.0 ppm B3 = ±2.5 ppm B4 = ±2.0 ppm B5 = ±1.5 ppm B9 = ±4.0 ppm BB = ±4.5 ppm BF = ±3.5 ppm	Blank = 40/60% 45 = 45/55%		L = ±10 ppm M = ±5 ppm

Specifications:

Frequency Range:	1.000 MHz to 35.000 MHz	
Available Stability Options:	±1.5 ppm ±2.0 ppm ±2.5 ppm ±3.0 ppm ±4.0 ppm ±4.5 ppm ±5.0 ppm	
Output Series:	TTL/CMOS	
Input Voltage:	+5.0 VDC ±5%	+3.3 VDC ±5%
Operating Temperature Range Options:	-20°C to +70°C -30°C to +60°C -30°C to +70°C -30°C to +75°C -40°C to +80°C	
Frequency Tuning Range:	±5 ppm Min. ±10 ppm Min.	
External Control Voltage:	+2.5 VDC, ±2.0 VDC	+1.65 VDC, ±1.35 VDC
Output Voltage:	TTL V_{OL}=0.4 V Max. TTL V_{OH}=2.4 V Min. HCMOS V_{OL}=10%V_{DD} V Max. HCMOS V_{OH}=90%V_{DD} V Min.	
Frequency Trim Range With Externally Adjustable Trimmer:	±3.0 ppm Minimum	
Output Load:	10 LS TTL, 15 pf CMOS	
Maximum Input Current:	20 mA	
Maximum Rise/Fall Time:	10 ns	
Duty Cycle:	40/60% 45/55%	
Maximum Frequency Aging at +25°C:	±1 ppm/yr	
Storage Temperature:	-40°C to +85°C	
Packaging:	Tape and Reel (1K per Reel)	

CC134

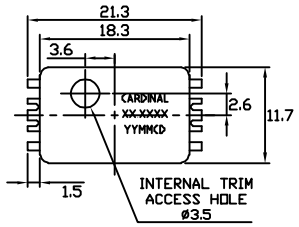

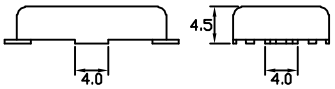

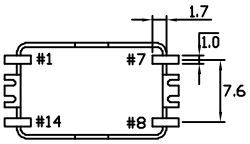

PIN	FUNCTION
1	Vcontrol/NC
7	GND
8	OUTPUT
14	Vcc

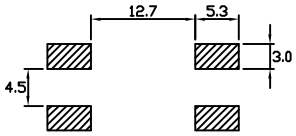

Cardinal Components, Inc.
155 Route 46 West
Wayne, NJ 07470
Rev: VT-090414-13

TEL: (973)785-1333
E-MAIL: sales@cardinalxtal.com
WEB: http://www.cardinalxtal.com

Surface Mount VC-TCXO

Series CC142

- *5 mm height*
- *Tight stability available*
- *Sinewave output*

RoHS COMPLIANT 2002 / 95 / EC

Part Numbering Example: CC142 L Z - A2 B2 - 22.5792

CC142	L	Z	A2	B2	22.5792	M
SERIES	**VOLTAGE**	**PACKAGING OPTIONS**	**OPERATING TEMP.**	**STABILITY**	**FREQUENCY**	**PULL RANGE**
CC142	Blank = 5V L = 3.3V	Blank = Bulk Z = Tape and Reel	A2 = -10°C ~+60°C A3 = -30°C ~+75°C A5 = -20°C ~+70°C A9 = 0°C ~+50°C AA = -10°C ~+70°C AB = -30°C ~+70°C AC = -30°C ~+60°C	B1 = ±5.0 ppm B2 = ±3.0 ppm B3 = ±2.5 ppm B4 = ±2.0 ppm B5 = ±1.5 ppm B9 = ±4.0 ppm BB = ±4.5 ppm BF = ±3.5 ppm		L = ±10 ppm M = ±5 ppm

Specifications:

Frequency Range:	10.0 MHz to 35.000 MHz
Available Stability Options:	±1.5 ppm ±2.0 ppm ±2.5 ppm ±3.0 ppm ±3.5 ppm ±4.0 ppm ±4.5 ppm ±5.0 ppm
Output Series:	Clipped Sine
Input Voltage:	+5.0 VDC ±5% +3.3 VDC ±5%
Operating Temperature Range Options:	0°C to +50°C -10°C to +60°C -10°C to +70°C -20°C to +70°C -30°C to +60°C -30°C to +70°C -30°C to +75°C -40°C to +80°C
Frequency Tuning Range:	±5 ppm Min. ±10 ppm Min.
External Control Voltage:	+2.5 VDC, ±2.0 VDC@ 5 V input +1.65 VDC, ±1.35 VDC@ 3.3 V input
Output Voltage:	1.0 Volt Peak to Peak Minimum
Frequency Trim Range With Externally Adjustable Trimmer:	±3.0 ppm Minimum
Output Load:	20K OHM Parallel with 5 pf
Maximum Input Current:	3 mA
Maximum Frequency Aging at +25°C:	±1 ppm/yr
Storage Temperature:	-40°C to +80°C
Packaging:	Tape and Reel (1K per Reel)

CC142

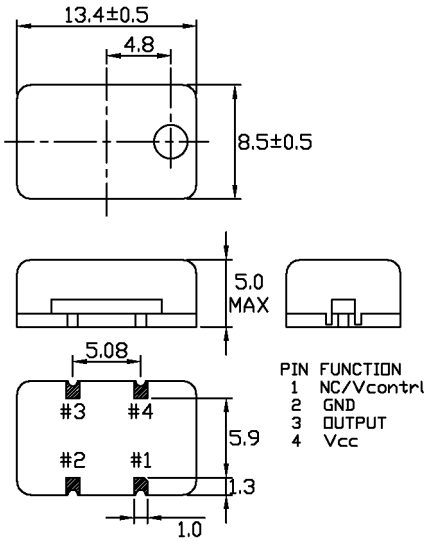

RECOMMENDED SOLDER PAD LAYOUT

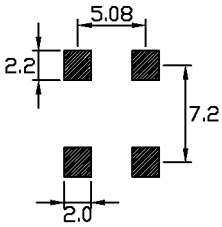

Cardinal Components, Inc.
155 Route 46 West
Wayne, NJ 07470

TEL: (973)785-1333
E-MAIL: sales@cardinalxtal.com
WEB: http://www.cardinalxtal.com

Surface Mount VC-TCXO

Series CTV4

- *4.0 mm max height*
- *Eutectic reflow soldering possible*

Pb RoHS COMPLIANT 2002 / 95 / EC

Part Numbering Example: CTV4 L Z - A3 B3 - 15.360

CTV4	L	Z	A3	B3	15.360
SERIES	VOLTAGE	PACKAGING OPTIONS	OPERATING TEMP.	STABILITY	FREQUENCY
CTV4	Blank = 5V L = 3.3V	Z = Tape and Reel	A1 = -10°C ~+50°C A2 = -10°C ~+60°C A3 = -30°C ~+75°C A4 = -40°C ~+75°C	B3 = ±2.5 ppm	

Specifications:

Frequency Range:	12.000 MHz to 19.680 MHz	
Available Stability Options:	±2.5 ppm	
Output Series:	Clipped Sine	
Input Voltage:	+5.0 VDC ± 5% +4.0 VDC ± 5% +3.7 VDC ± 5% +3.3 VDC ± 5% +3.0 VDC ± 5%	*Standard* *Standard*
Operating Temperature Range Options:	-30°C to +75°C	*Standard*
Frequency Tuning Range:	±4.0 ppm Min.	
External Control Voltage:	+2.5 VDC, ±2.0 VDC (5V Supply) +1.65 VDC, ±1.35 VDC (3V Supply)	
Polarity Of Freq. Slope:	Positive	
Output Voltage:	1.0 Volt Peak to Peak Minimum	
Frequency Trim Range With Externally Control Voltage:	±3.0 ppm Minimum	
Output Load:	10K OHM Parallel with 10 pf	
Maximum Input Current:	2.0 mA	
Maximum Frequency Aging at +25°C:	±1 ppm/yr	
Freq. Stability Vs. Change of Input Voltage of ±5%:	±0.3 ppm	
Storage Temperature:	-40°C to +85°C	
Packaging:	Tape and Reel (1K per Reel)	

CTV4

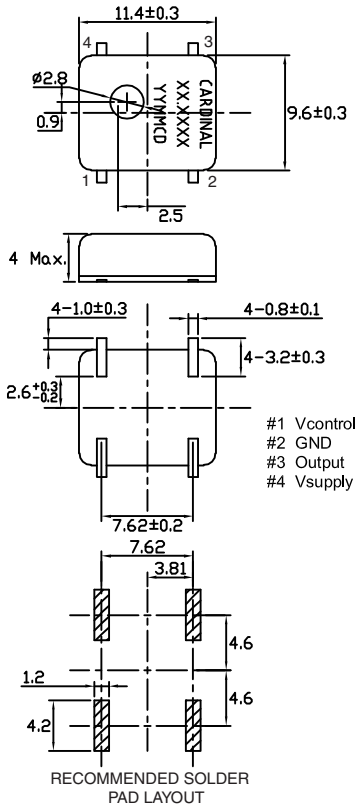

Cardinal Components, Inc.
155 Route 46 West
Wayne, NJ 07470

TEL: (973)785-1333
E-MAIL: sales@cardinalxtal.com
WEB: http://www.cardinalxtal.com

Surface Mount VC-TCXO

Series CTV6

- *4.0 mm Max height*
- *Various input supply voltage options*

Pb RoHS COMPLIANT 2002 / 95 / EC

Part Numbering Example: CTV6 L Z - A3 B3 - 15.360

CTV6	L	Z	A3	B3	15.360
SERIES	VOLTAGE	PACKAGING OPTIONS	OPERATING TEMP.	STABILITY	FREQUENCY
CTV6	Blank = 5V L = 3.3V	Z = Tape and Reel	A1 = -10°C ~+50°C A2 = -10°C ~+60°C A3 = -30°C ~+75°C A4 = -40°C ~+75°C	B3 = ±2.5 ppm	

Specifications:

Frequency Range:	12.000 MHz to 19.680 MHz
Available Stability Options:	±2.5 ppm
Output Series:	Clipped Sine
Input Voltage:	+5.0 VDC ±5% +3.3 VDC ±5%
Operating Temperature Range Options:	-30°C to +75°C
Frequency Tuning Range:	±4.0 ppm Min.
External Control Voltage:	+2.5 V to VDC -2.0 V +1.65 V to VDC +1.35V
Polarity Of Freg. Slope:	Positive
Output Voltage:	1.0 Volt Peak to Peak Minimum
Frequency Trim Range With Externally Adjustable Trimmer:	±3.0 ppm Minimum
Output Load:	10K OHM Parallel with 15 pf
Maximum Input Current:	2.0 mA
Maximum Frequency Aging at +25°C:	±1.0 ppm/yr
Freq. Stability Vs. Change of Input Voltage of ±5%:	±0.3 ppm
Storage Temperature:	-40°C to +85°C
Packaging:	Tape and Reel (1K per Reel)

CTV6

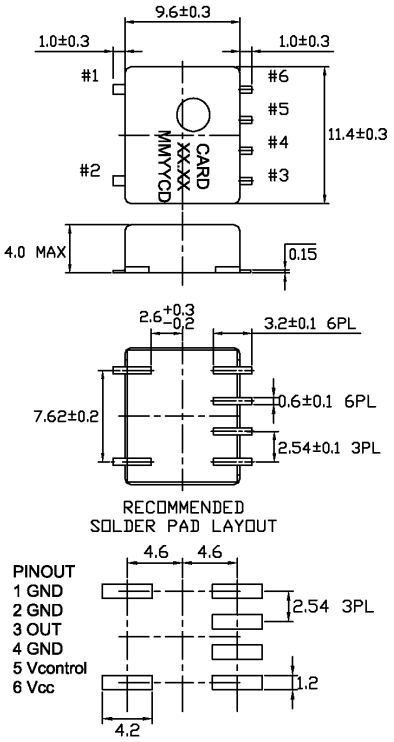

Cardinal Components, Inc.
155 Route 46 West
Wayne, NJ 07470
Rev: VT-090414-13

TEL: (973)785-1333
E-MAIL: sales@cardinalxtal.com
WEB: http://www.cardinalxtal.com

LVPECL Surface Mount VC-TCXO
* LVPECL Output
* Industry Standard Outline

Applications
* Serial Communications
* Routers
* Switches
* WAN Interfaces
* Test Equipment

Series CTVED

RoHS COMPLIANT 2002 / 95 / EC

Part Numbering Example: CTVED Z - A5 B3 - 222.5792 TS

CTVED	Z	A5	B3	222.5792	TS
SERIES	PACKAGING OPTIONS	OPERATING TEMP.	STABILITY	FREQUENCY	TRI-STATE
CTVED	Blank = Bulk Z = Tape and Reel	Blank = 0°C ~ +70°C A5 = -20°C ~ +70°C	B3 = ±2.5 ppm		TS = Tri-State

Specifications:	Min	Typ	Max	Unit
Frequency Range:	38		640	MHz
Stability:	- 2.5		+ 2.5	ppm
Supply Voltage:	3.135	3.3	3.465	V
Frequency Tuning Range:		+/- 8		ppm
External Control Voltage:	0.35		3.0	V
Operating Temperature:	-30		+ 70	°C
Storage Temperature:	-40		+ 85	°C
Duty Cycle:	45		55	%
Start-Up Time:		3	10	mS
Aging: (ppm/1st Year) Ta=25C, Vdd=3.3V			1	ppm
Supply Current:			100	mA
Short Circuit Current:		± 50		mA
RMS Period Jitter:		5		pS
RMS Integrated Jitter: 12kHz to 20MHz		0.7		pS
Phase Noise @ 10kHz:			-120	dBc/Hz
Output Voltage:				
Voh	Vdd - 1.025			V
Vol			Vdd - 1.62	V
Rise/Fall Time:		0.4	0.8	nS
Output Level:		LVPECL		
Packaging:		Tape and Reel 1000 pcs per Reel		

Tristate internal pull down. Output active when low.

CTVED

Dimensions are in mm

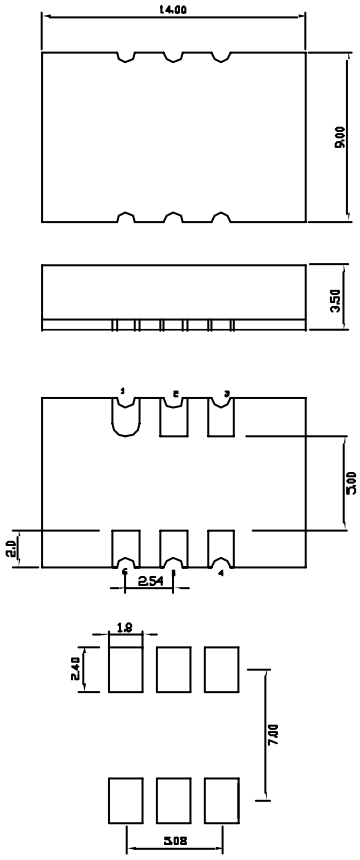

PIN Function
1 VCONTROL
2 DISABLE
3 Ground
4 LVPECL +
5 LVPECL -
6 Vdd

LVPECL Levels Test Circuit

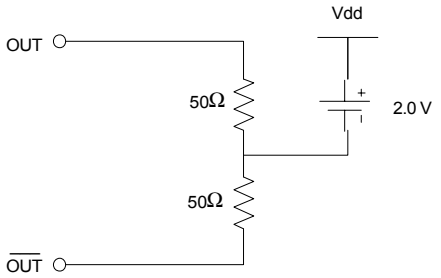

Cardinal Components, Inc.
155 Route 46 West
Wayne, NJ 07470
Rev: VT-090414-13

TEL: (973)785-1333
E-MAIL: sales@cardinalxtal.com
WEB: http://www.cardinalxtal.com

LVDS Surface Mount VC-TCXO

Series CTVL

* LVDS Output
* Industry Standard Outline

Applications

* Serial Communications
* Routers
* Switches
* WAN Interfaces
* Test Equipment

Pb RoHS COMPLIANT 2002 / 95 / EC

Part Numbering Example: CTVL Z - A5 B3 - 222.5792 TS

CTVL	Z	A5	B3	222.5792	TS
SERIES	PACKAGING OPTIONS	OPERATING TEMP.	STABILITY	FREQUENCY	TRI-STATE
CTVL	Blank = Bulk Z = Tape and Reel	Blank = 0°C ~ +70°C A5 = -20°C ~ +70°C	B3 = ±2.5 ppm		TS = Tri-State

Specifications:	Min	Typ	Max	Unit
Frequency Range:	38		640	MHz
Stability:	- 2.5		+ 2.5	ppm
Supply Voltage:	3.135	3.3	3.465	V
Frequency Tuning Range:		+/- 8		ppm
External Control Voltage:	0.35		3.0	V
Operating Temperature:	-30		+ 70	°C
Storage Temperature:	-40		+ 85	°C
Duty Cycle:	45		55	%
Start-Up Time:		3	10	mS
Aging: (ppm/1st Year) Ta=25C, Vdd=3.3V			1	ppm
Supply Current:			100	mA
Short Circuit Current:		± 50		mA
RMS Period Jitter:		5		pS
RMS Integrated Jitter: 12kHz to 20MHz		0.7		pS
Phase Noise @ 10kHz:			-120	dBc/Hz
Output Voltage: Voh Vol	 Vdd - 0.9		 Vdd - 1.6	 V V
Output Differential Voltage:	247	355	454	mV
Rise/Fall Time:		0.4	0.8	nS
Output Level:		LVDS		
Packaging:		Tape and Reel 1000 pcs per Reel		

Tristate internal pull up. Output active when high.

CTVL

Dimensions are in mm

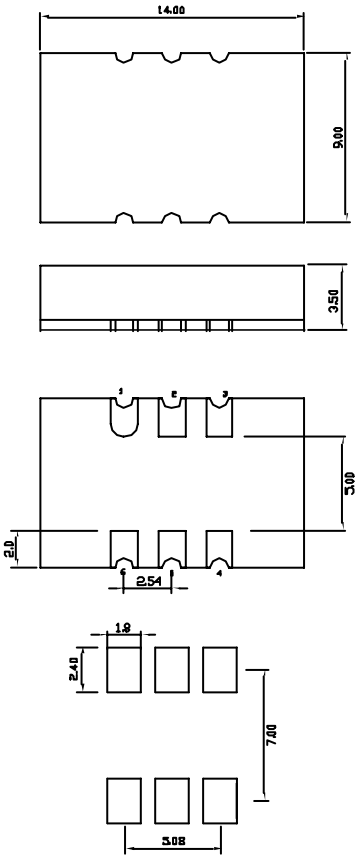

PIN Function
1 VCONTROL
2 ENABLE
3 Ground
4 LVDS +
5 LVDS -
6 Vdd

LVDS Levels Test Circuit

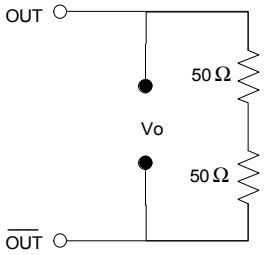

Cardinal Components, Inc.
155 Route 46 West
Wayne, NJ 07470
Rev: VT-090414-13

TEL: (973)785-1333
E-MAIL: sales@cardinalxtal.com
WEB: http://www.cardinalxtal.com

Surface Mount VC-TCXO

Series CTX5V

Cardinal's CTX5 has various input supply volatge options.
The CTX5V is capable of withstanding high temperature IR reflow applications.

Pb RoHS COMPLIANT 2002 / 95 / EC

Part Numbering Example: CTX5V L Z - A3 B3 - 15.360

CTX5V	L	Z	A3	B3	15.360
SERIES	VOLTAGE	PACKAGING OPTIONS	OPERATING TEMP.	STABILITY	FREQUENCY
CTX5V	Blank = 5V L = 3.3V	Z = Tape and Reel	A1 = -10°C ~+50°C A2 = -10°C ~+60°C A3 = -30°C ~+75°C A4 = -40°C ~+75°C	B3 = ±2.5 ppm	

Specifications:

Frequency Range:	12.000 MHz to 19.680 MHz
Available Stability Options:	±2.5 ppm
Output Series:	Clipped Sine
Input Voltage:	+5.0 VDC ± 5% *Standard* +3.3 VDC ± 5% *Standard*
Operating Temperature Range Options:	-30°C to +75°C *Standard*
Frequency Tuning Range:	±4.0 ppm Min.
External Control Voltage:	+2.5 VDC, ±2.0 VDC (5V Supply) +1.65 VDC, ±1.35 VDC (3V Supply)
Polarity Of Freg. Slope:	Positive
Output Voltage:	1.0 Volt Peak to Peak Minimum
Frequency Trim Range With Externally Control Voltage:	±3.0 ppm Minimum
Output Load:	10K OHM Parallel with 10 pf
Maximum Input Current:	2.0 mA
Maximum Frequency Aging at +25°C:	±1 ppm/yr
Freq. Stability Vs. Change of Input Voltage of ±5%:	±0.3 ppm
Storage Temperature:	-40°C to +85°C
Packaging:	Tape and Reel (1K per Reel)

CTX5V

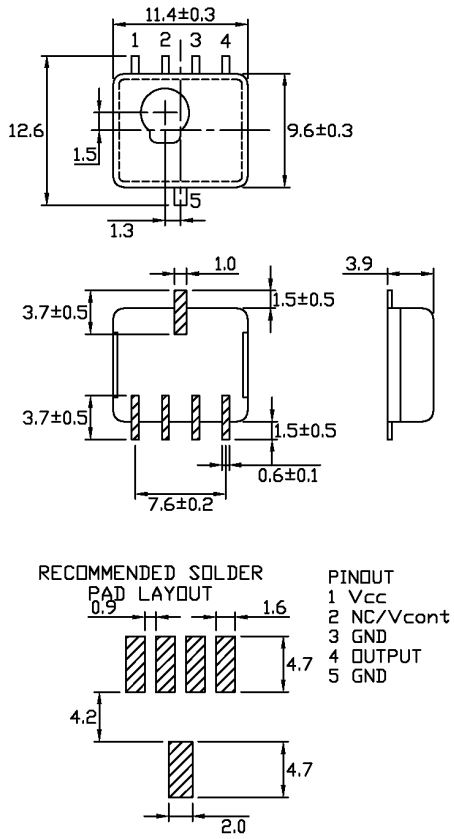

Cardinal Components, Inc.
155 Route 46 West
Wayne, NJ 07470

TEL: (973)785-1333
E-MAIL: sales@cardinalxtal.com
WEB: http://www.cardinalxtal.com

Surface Mount VC-TCXO

- *Industry standard footprint*

Series CTX8V

RoHS COMPLIANT 2002 / 95 / EC

Part Numbering Example: CTX8V Z - A3 B3 - 15.360

CTX8V	Z	A3	B3	15.360
SERIES	PACKAGING OPTIONS	OPERATING TEMP.	STABILITY	FREQUENCY
CTX8V	Z = Tape and Reel	A1=-10°C ~ +50°C A2=-10°C ~ +60°C A3=-30°C ~ +75°C A4=-40°C ~ +75°C	B1 = ±5.0 ppm B2 = ±3.0 ppm B3 = ±2.5 ppm	

Specifications:

Frequency Range:	9.600 MHz to 32.000 MHz
Available Stability Options:	±5.0 ppm ±3.0 ppm ±2.5 ppm
Output Series:	Clipped Sine
Input Voltage:	+5.0 VDC ±5%
Operating Temperature Range Options:	-10°C to +50°C -10°C to +60°C -30°C to +75°C -40°C to +75°C
Frequency Tuning Range:	±8.0 ppm to ±15 ppm
External Control Voltage:	+2.5 VDC, ±2.0 VDC
Output Voltage:	1.0 Volt Peak to Peak Minimum
Frequency Trim Range With Externally Adjustable Trimmer:	±3.0 ppm Minimum
Output Load:	10K OHM Parallel with 10 pf
Maximum Input Current:	2.0 mA
Maximum Frequency Aging at +25°C:	±1 ppm/yr
Freq. Stability Vs. Change of Input Voltage of ±5%	±0.3 ppm Max.
Storage Temperature:	-40°C to +85°C
Packaging:	Tape and Reel (1K per Reel)

CTX8V

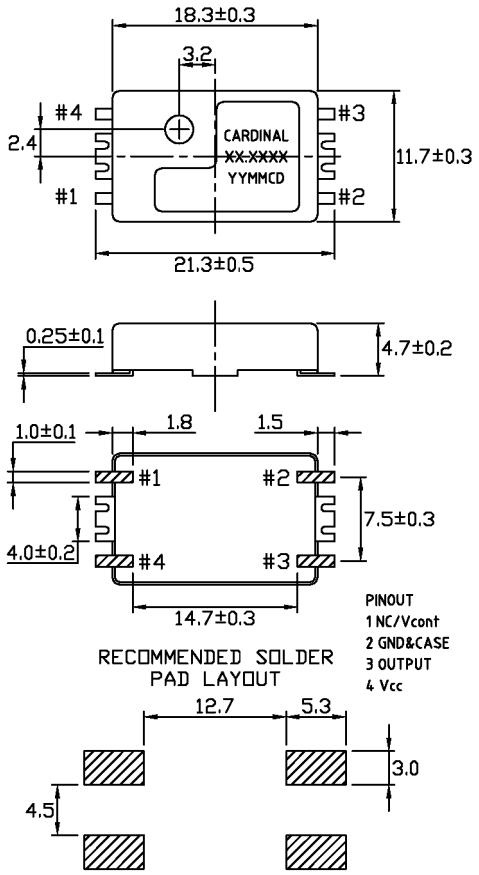

Cardinal Components, Inc.
155 Route 46 West
Wayne, NJ 07470

TEL: (973)785-1333
E-MAIL: sales@cardinalxtal.com
WEB: http://www.cardinalxtal.com

OCXO SECTION

Page Number	Output Type	OCXO	PCB Mount	Package Dimension (LxWxH) in mm	Package Style	Voltage (V)	Stability	Freq Range (MHz)
OX - 1	HCMOS	**COA**	TH	25x25x9.6	Hermetic	5	200 ppb	10
OX - 2	HCMOS	**COS**	TH	25x25x9.6	Hermetic	5	10 ppb	38.88

Cardinal Components, Inc.
155 Route 46 West
Wayne, NJ 07470
Rev: OX-090414-1

TEL: (973)785-1333
E-MAIL: sales@cardinalxtal.com
WEB: http://www.cardinalxtal.com

Part Number: COA38.88BGABPD1545

Series: COA
Description: AT CUT OCXO

DESCRIPTION	MIN	TYPICAL	MAX	U/M
Frequency		38.880000		MHz
Stability Over Operating Temperature Range	-200		200	ppb
Tolerance @ 25°C		500/1.25		<± ppb/VC(V)
Oscillator Supply Voltage	4.75	5.0	5.25	V
OCXO Control Voltage	0	1.25	2.5	Vdc
VCXO Linearity			10	± %
Polarity of Frequency Slope		positive		
Operating Temperature Range	-30		+70	ºC
Oscillator Output Load		15 pF HCMOS		
Maximum aging rate after power on 30 days	2	.5	3	±ppb/day//ppm/1yr//10yr
Rise Fall Time			4	nS
Load capacitance		15		pF
Symmetry		45/55%		
Storage temperature	-40		+85	ºC
Initial Current		500		mA
Steady State Current		200		mA
Phase Noise 1 Hz offset		-70		dBc/Hz
Phase Noise 10 Hz offset		-100		dBc/Hz
Phase Noise 100 Hz offset		-130		dBc/Hz
Phase Noise 1 kHz offset		-141		dBc/Hz
Phase Noise 10 kHz offset		-145		dBc/Hz
Phase Noise 100 kHz offset		-150		dBc/Hz
Phase Noise 1 MHz offset		-160		dBc/Hz
Markings		CARDINAL COS-XXXX 38.880000 YYMMDD		
Lead Time		Call Marketing		

COA

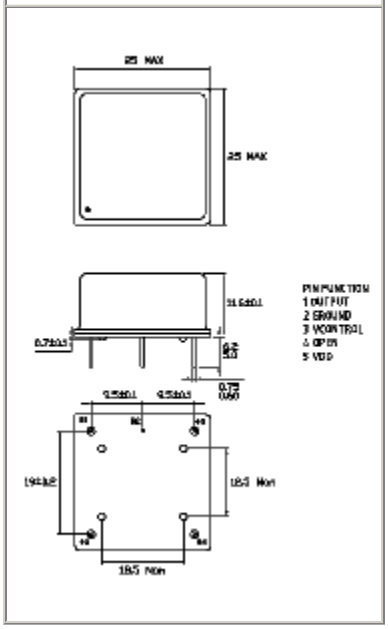

Cardinal Components, Inc.
155 Route 46 West
Wayne, NJ 07470
Rev: OX-090414-1

TEL: (973)785-1333
E-MAIL: sales@cardinalxtal.com
WEB: http://www.cardinalxtal.com

Part Number: COS10.0BEA7PD1545

Series: COS
Description: SC CUT OCXO

DESCRIPTION	MIN	TYPICAL	MAX	U/M
Frequency		10.000000		MHz
Stability Over Operating Temperature Range	-10.0		+10.0	ppb
Tolerance @ 25°C		10		<± ppb/VC=+2.0V
Oscillator Supply Voltage	4.75	5.0	5.25	V
OCXO Control Voltage	0	2	4	Vdc
VCXO Linearity			10	± %
Polarity of Frequency Slope		positive		
Operating Temperature Range	-40		+85	ºC
Oscillator Output Load		15 pF HCMOS		
Maximum aging rate after power on 30 days	.5	.1	.4	±ppb/day//ppm/1yr//10yr
Rise Fall Time			6	nS
Load capacitance		15		pF
Symmetry		45/55%		
Storage temperature	-40		+85	ºC
Initial Current		600		mA
Steady State Current		250		mA
Phase Noise 1 Hz offset		-90		dBc/Hz
Phase Noise 10 Hz offset		-125		dBc/Hz
Phase Noise 100 Hz offset		-140		dBc/Hz
Phase Noise 1 kHz offset		-150		dBc/Hz
Phase Noise 10 kHz offset		-155		dBc/Hz
Phase Noise 100 kHz offset		-160		dBc/Hz
Phase Noise 1 MHz offset		-165		dBc/Hz
Markings		CARDINAL COS-XXXX 10.000000 YYMMDD		
Lead Time		Call Marketing		

COS

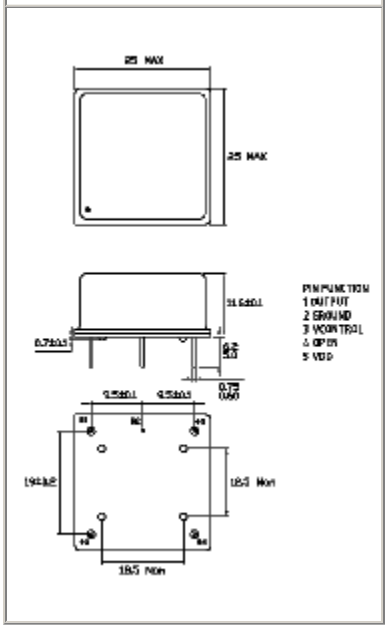

Multi-Freq Output

Page Number	Output Type	Multi-Output	PCB Mount	Number of Outputs	Configuration	Package Dimension (LxWxH) in mm	Package Style	Voltage (V)	Stability	Freq Range Low (MHz)	Freq Range High (MHz)
M - 1	CMOS	**CCE2C**	TH, SMD	2	Fixed	Full, 9.4x11.4x3.0	Can, FR4	3.3	50	0.2	200
M - 6	CMOS	**CCE4C**	TH, SMD	4	Fixed	Full, 9.4x11.4x3.0	Can, FR4	3.3	50	0.2	200
M-9	CMOS	**CCE5C**	TH, SMD	5	Fixed	Full, 9.4x11.4x3.0	Can, FR4	3.3	50	0.2	200
M-13	CMOS	**CCE6C**	TH, SMD	6	Fixed	Full, 9.4x11.4x3.0	Can, FR4	3.3	50	0.2	200
M-17	CMOS	**CCT2C**	TH, SMD	2	Fixed	Full, 9.4x11.4x3.0	Can, FR4	3.3	2.5	0.2	200
M-21	CMOS	**CCT4C**	TH, SMD	4	Fixed	Full, 9.4x11.4x3.0	Can, FR4	3.3	2.5	0.2	200
M-25	CMOS	**CCT5C**	TH, SMD	5	Fixed	Full, 9.4x11.4x3.0	Can, FR4	3.3	2.5	0.2	200
M-29	CMOS	**CCT6C**	TH, SMD	6	Fixed	Full, 9.4x11.4x3.0	Can, FR4	3.3	2.5	0.2	200
M-33	CMOS	**CCE4RC**	TH, SMD	4	I2C	Full, 9.4x11.4x3.0	Can, FR4	3.3	50	0.2	200
M-39	CMOS	**CCE5RC**	TH, SMD	5	I2C	Full, 9.4x11.4x3.0	Can, FR4	3.3	50	0.2	200
M-44	CMOS	**CCE6RC**	TH, SMD	6	I2C	Full, 9.4x11.4x3.0	Can, FR4	3.3	50	0.2	200
M-49	CMOS	**CCT4RC**	TH, SMD	4	I2C	Full, 9.4x11.4x3.0	Can, FR4	3.3	2.5	0.2	200
M-54	CMOS	**CCT5RC**	TH, SMD	5	I2C	Full, 9.4x11.4x3.0	Can, FR4	3.3	2.5	0.2	200
M-59	CMOS	**CCT6RC**	TH, SMD	6	I2C	Full, 9.4x11.4x3.0	Can, FR4	3.3	2.5	0.2	200
M-64	CMOS, LVPECL	**CCE3E**	TH, SMD	3	Fixed	Full, 9.4x11.4x3.0	Can, FR4	3.3	50	100	400
M-68	CMOS, LVPECL	**CCE4E**	TH, SMD	4	Fixed	Full, 9.4x11.4x3.0	Can, FR4	3.3	50	100	400
M-72	CMOS, LVPECL	**CCE5E**	TH, SMD	5	Fixed	Full, 9.4x11.4x3.0	Can, FR4	3.3	50	100	400
M-76	CMOS, LVPECL	**CCE6E**	TH, SMD	6	Fixed	Full, 9.4x11.4x3.0	Can, FR4	3.3	50	100	400
M-80	CMOS, LVPECL	**CCT4E**	TH, SMD	4	Fixed	Full, 9.4x11.4x3.0	Can, FR4	3.3	2.5	100	400
M-84	CMOS, LVPECL	**CCT5E**	TH, SMD	5	Fixed	Full, 9.4x11.4x3.0	Can, FR4	3.3	2.5	100	400
M-88	CMOS, LVPECL	**CCT6E**	TH, SMD	6	Fixed	Full, 9.4x11.4x3.0	Can, FR4	3.3	2.5	100	400
M-92	CMOS, LVPECL	**CCE4RE**	TH, SMD	4	I2C	Full, 9.4x11.4x3.0	Can, FR4	3.3	50	100	400
M-97	CMOS, LVPECL	**CCE5RE**	TH, SMD	5	I2C	Full, 9.4x11.4x3.0	Can, FR4	3.3	50	100	400
M-103	CMOS, LVPECL	**CCE6RE**	TH, SMD	6	I2C	Full, 9.4x11.4x3.0	Can, FR4	3.3	50	100	400
M-107	CMOS, LVPECL	**CCT4RE**	TH, SMD	4	I2C	Full, 9.4x11.4x3.0	Can, FR4	3.3	2.5	100	400
M-112	CMOS, LVPECL	**CCT5RE**	TH, SMD	5	I2C	Full, 9.4x11.4x3.0	Can, FR4	3.3	2.5	100	400
M-117	CMOS, LVPECL	**CCT6RE**	TH, SMD	6	I2C	Full, 9.4x11.4x3.0	Can, FR4	3.3	2.5	100	400
M-122	CMOS, LVPECL	**CCE6ET**	TH, SMD	6	Fixed	Full, 9.4x11.4x3.0	Can, FR4	3.3	50	19.44	155.52

Cardinal Components, Inc.
155 Route 46 West
Wayne, NJ 07470
Rev: M-090414-14

TEL: (973)785-1333
E-MAIL: sales@cardinalxtal.com
WEB: http://www.cardinalxtal.com

Factory Prog. 2 Output CMOS Oscillator

- *Full Custom Multi-Frequency Programmable Osc*
- *Reduced EMI by turning off unused output*
- *Factory Programmable*
- *Industry-standard packaging saves on board space*
- *Mult. outputs 1 pkg vs. mult. osc & assoc. comp.*
- *Lower system cost*
- *Increased integration*

Applications

- *High-end multimedia*
- *Communications*
- *Industrial*
- *A/D converters*
- *Consumer Applications*
- *Product differentiation*
- *Low-power applications*

Series CCE2C

Pb RoHS COMPLIANT 2002 / 95 / EC

Part Numbering Example: CCE2C 1A 200.0 / 150.0

CCE2C	1A	200	150
SERIES	PACKAGE STYLE	FREQUENCY A	FREQUENCY B
	1A = 14 pin dip 9 = 9.6x11.4 SMD	0.2 - 200 MHz	0.2 - 200 MHz

Specifications:	Min	Typ	Max	Unit
Frequency Range: Output A CMOS Output B CMOS	 0.2 0.2		 200 200	 MHz MHz
Available Stability Options:	-50		50	ppm
Supply Voltage:	3.135	3.3	3.465	V
Operating Temperature Range Options:	-40		85	°C
Storage Temperature:	-55		125	°C
Duty Cycle:	40 45		60 55	% %
Start-Up Time:		3	10	mS
Aging (PPM/1st Year): Ta=25C, Vdd=3.3V			±5	
Static Discharge Voltage Mil-Std 883, method 3015	2000			V
Output Load: CMOS, < 40 MHz CMOS, ≥ 40 MHz			 30 15	 pF pF
Output Level:	CMOS			
Packaging:	25 / Tube Tape & Reel			14 pin SMD

Notes: Recommended .01 µF bypass capacitor from Vcc to GND. Capacitor should be as close to oscillator as possible.

Cardinal Components, Inc.
155 Route 46 West
Wayne, NJ 07470
Rev: M-090414-14

TEL: (973)785-1333
E-MAIL: sales@cardinalxtal.com
WEB: http://www.cardinalxtal.com

Factory Prog. 2 Output CMOS Oscillator

Series **CCE2C**

Electrical Characteristics

	Description	Conditions	Min	Typ	Max	Unit
Ioh	Output High Current	Voh = (L)Vdd - 0.5, (L)Vdd = 3.3 V	12	24		mA
Iol	Output Low Current	Vol = .5, (L)Vdd = 3.3 V	12	24		mA
Vih	High Level Input Voltage	CMOS levels, % of Vdd	0.7			V
Vil	Low-Level Input Voltage	CMOS levels, % of Vdd			0.3	V
Iih	Input High Current	Vin = AVdd - 0.3 V		<1	10	µA
Iil	Input Low Current	Vin = + 0.3 V		<1	10	µA
Ioz	Output Leakage Current	tri-state outputs			10	µA
Idd	Total Power Supply Current	1 output@19.44 MHz; 1 output@77.76 MHz 1 output@155.22 Mhz; 1 output@200 MHz		15 26		mA mA
Idds	Shutdown Power Supply Curr	Shutdown active		5	20	µA

Output Clock Switching Characteristics

	Description	Conditions	Min	Typ	Max	Unit
1/t1	Output Frequency	Clock output limit, CMOS, Commercial			200	MHz
t3	Rising Edge Slew Rate	Output clock rise time, 20% – 80% Vdd	0.75	1.4		nS
t4	Falling Edge Slew Rate	Output clock fall time, 20% – 80% Vdd	0.75	1.4		nS
t5	Output tri-state timing after SD/OE switches	Time for output to enter/leave tri-state mode		150	300	nS
t6	Clock Jitter measured at Vdd/2	Peak-to-Peak period jitter, CLK outputs		200		pS

Cardinal Components, Inc.
155 Route 46 West
Wayne, NJ 07470
Rev: M-090414-14

TEL: (973)785-1333
E-MAIL: sales@cardinalxtal.com
WEB: http://www.cardinalxtal.com

ALL OUTPUTS, DUTY CYCLE, RISE/FALL TIME

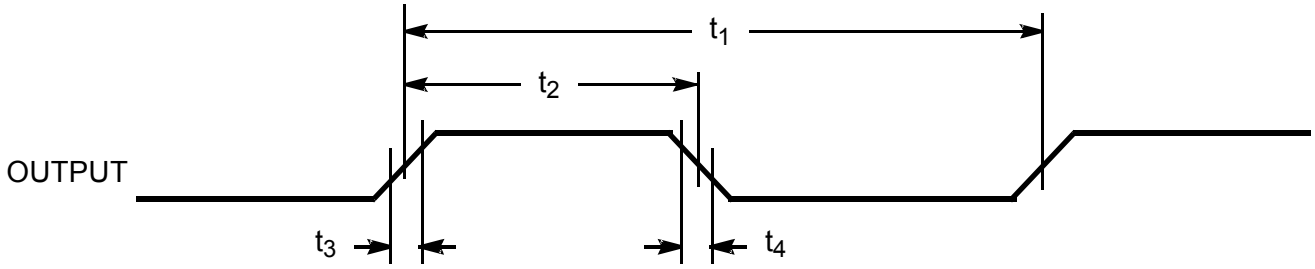

OUTPUT 3-STATE TIMING

CLK OUTPUT JITTER

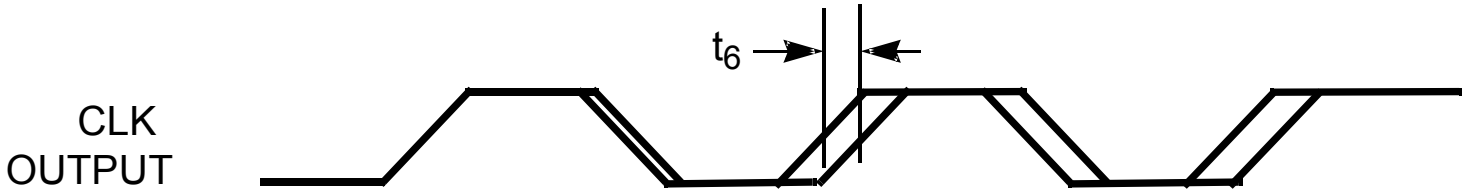

DIP

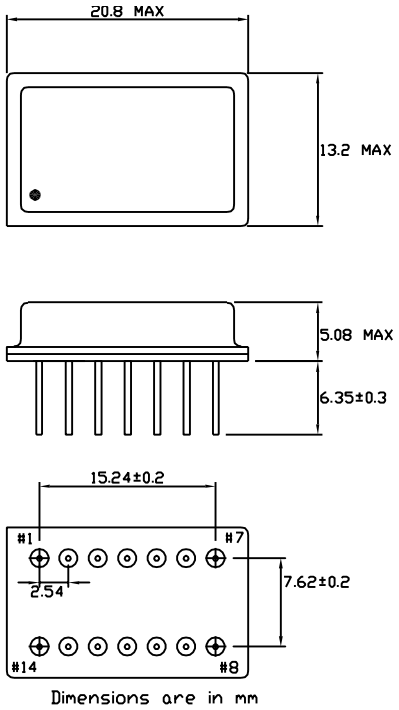

PIN FUNCTION
PIN 1 OE (CONNECT TO VDD)
PIN 2 SUSPEND (CONNECT TO GND)
PIN 3 VDD
PIN 4 FACTORY USE (MAKE NO CONNECTION)
PIN 5 CONNECT TO PIN 6
PIN 6 CONNECT TO PIN 5
PIN 7 GND
PIN 8 FACTORY USE (MAKE NO CONNECTION)
PIN 9 FACTORY USE (MAKE NO CONNECTION)
PIN10 FACTORY USE (MAKE NO CONNECTION)
PIN 11 FACTORY USE (MAKE NO CONNECTION)
PIN 12 FACTORY USE (MAKE NO CONNECTION)
PIN 13 CLK A OUTPUT
PIN 14 CLK B OUTPUT

SMD

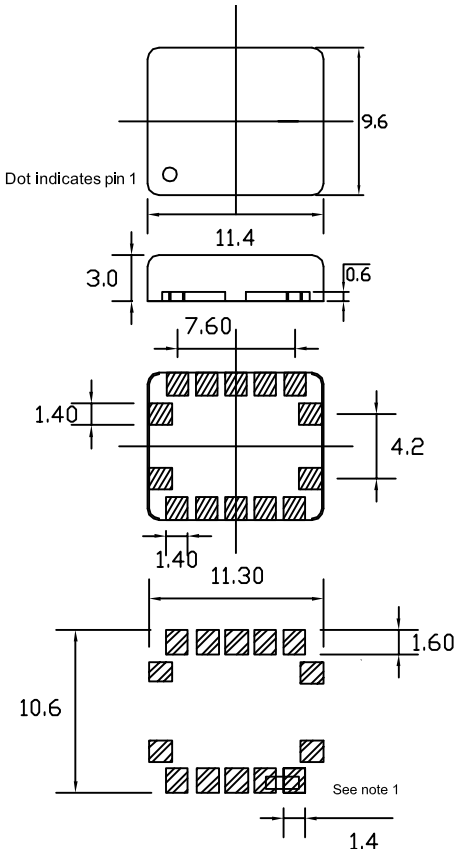

PIN FUNCTION
PIN 1 FACTORY USE (MAKE NO CONNECTION)
PIN 2 OE
PIN 3 VDD
PIN 4 FACTORY USE (MAKE NO CONNECTION)
PIN 5 CONNECT TO PIN 6
PIN 6 CONNECT TO PIN 5
PIN 7 GND
PIN 8 FACTORY USE (MAKE NO CONNECTION)
PIN 9 FACTORY USE (MAKE NO CONNECTION)
PIN10 FACTORY USE (MAKE NO CONNECTION)
PIN 11 FACTORY USE (MAKE NO CONNECTION)
PIN 12 FACTORY USE (MAKE NO CONNECTION)
PIN 13 CLK A OUTPUT
PIN 14 CLK B OUTPUT

Dimensions in mm
Recommended solder pad layout

Note1:
For proper operation pin 5 must be connected to pin 6

Cardinal Components, Inc.
155 Route 46 West
Wayne, NJ 07470
Rev: M-090414-14

TEL: (973)785-1333
E-MAIL: sales@cardinalxtal.com
WEB: http://www.cardinalxtal.com

Factory Prog. 4 Output CMOS Oscillator

- *Full Custom Multi-Frequency Programmable Osc*
- *Reduced EMI by turning off unused output*
- *Factory Programmable*
- *Industry-standard packaging saves on board space*
- *Mult. outputs 1 pkg vs. mult. osc & assoc. comp.*
- *Lower system cost*
- *Increased Integration*

Applications

- *High-end multimedia*
- *Communications*
- *Industrial*
- *A/D converters*
- *Consumer Applications*
- *Product differentiation*
- *Low-power applications*

Series CCE4C

Pb RoHS COMPLIANT 2002 / 95 / EC

Part Numbering Example: CCE4C 1A 200.0 / 150.0 / 125.0 / 100.0

CCE4C	1A	200	150	125	100
SERIES	PACKAGE STYLE	FREQUENCY A	FREQUENCY B	FREQUENCY C	FREQUENCY D
	1A=14 pin dip 9=9.6x11.4 SMD	0.2 - 200 MHz	0.2 - 200 MHz	0.2 - 200 MHz	0.2 - 200 MHz

Specifications:	Min	Typ	Max	Unit
Frequency Range:				
Output A CMOS	0.2		200	MHz
Output B CMOS	0.2		200	MHz
Output C CMOS	0.2		200	MHz
Output D CMOS	0.2		200	MHz
Available Stability Options:	-50		50	ppm
Supply Voltage:	3.135	3.3	3.465	V
Operating Temperature Range Options:	-40		85	°C
Storage Temperature:	-55		125	°C
Duty Cycle:	40 45		60 55	% %
Start-Up Time:		3	10	mS
Aging (PPM/1st Year): Ta=25C, Vdd=3.3V			±5	
Static Discharge Voltage Mil-Std 883, method 3015	2000			V
Output Load:				
CMOS, < 40 MHz			30	pF
CMOS, ≥ 40 MHz			15	pF
Output Level:	CMOS			
Packaging:	25 / Tube Tape & Reel			14 pin SMD

Notes: Recommended .01 µF bypass capacitor from Vcc to GND. Capacitor should be as close to oscillator as possible.

Cardinal Components, Inc.
155 Route 46 West
Wayne, NJ 07470
Rev: M-090414-14

TEL: (973)785-1333
E-MAIL: sales@cardinalxtal.com
WEB: http://www.cardinalxtal.com

Factory Prog. 4 Output CMOS Oscillator

Series **CCE4C**

Electrical Characteristics

	Description	Conditions	Min	Typ	Max	Unit
Ioh	Output High Current	Voh = (L)Vdd - 0.5, (L)Vdd = 3.3 V	12	24		mA
Iol	Output Low Current	Vol = .5, (L)Vdd = 3.3 V	12	24		mA
Vih	High Level Input Voltage	CMOS levels, % of Vdd	0.7			V
Vil	Low-Level Input Voltage	CMOS levels, % of Vdd			0.3	V
Iih	Input High Current	Vin = AVdd - 0.3 V		<1	10	µA
Iil	Input Low Current	Vin = + 0.3 V		<1	10	µA
Ioz	Output Leakage Current	tri-state outputs			10	µA
Idd	Total Power Supply Current	Example 1: 1 output@19.44 MHz; 1 output@38.88 MHz 1 output@77.76 Mhz; 1 output@155.52 MHz Example 2: 1 output@50 MHz; 1 output@106.25 MHz 1 output@200 Mhz; 1 output@155.52 MHz		26 38		mA mA
Idds	Shutdown Power Supply Curr	Shutdown active		5	20	µA

Output Clock Switching Characteristics

	Description	Conditions	Min	Typ	Max	Unit
1/t1	Output Frequency	Clock output limit, CMOS, Commercial			200	MHz
t3	Rising Edge Slew Rate	Output clock rise time, 20% – 80% Vdd	0.75	1.4		nS
t4	Falling Edge Slew Rate	Output clock fall time, 20% – 80% Vdd	0.75	1.4		nS
t5	Output tri-state timing after SD/OE switches	Time for output to enter/leave tri-state mode		150	300	nS
t6	Clock Jitter measured at Vdd/2	Peak-to-Peak period jitter, CLK outputs		200		pS

ALL OUTPUTS, DUTY CYCLE, RISE/FALL TIME

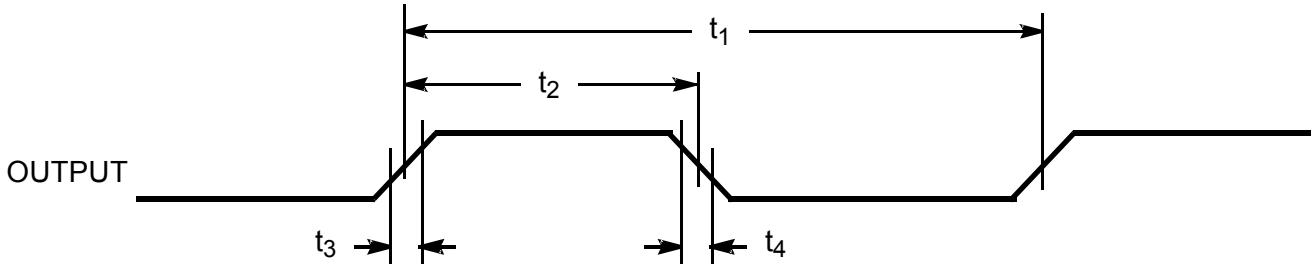

OUTPUT 3-STATE TIMING

CLK OUTPUT JITTER

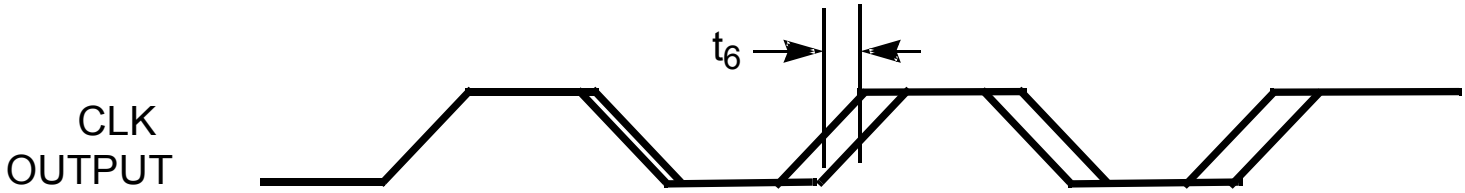

DIP

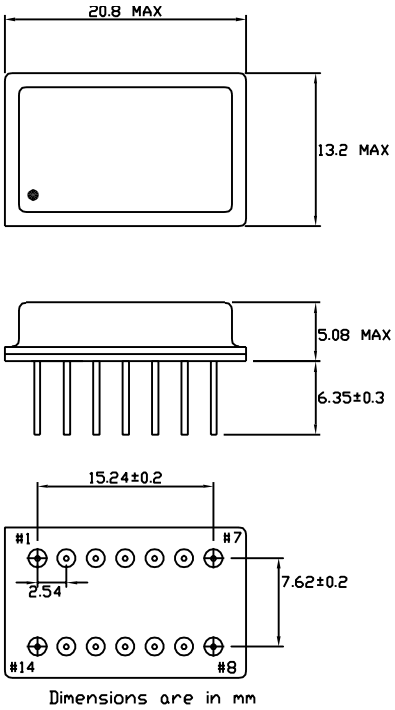

PIN FUNCTION
PIN 1 OE (CONNECT TO VDD)
PIN 2 SUSPEND (CONNECT TO GND)
PIN 3 VDD
PIN 4 CLK C OUTPUT
PIN 5 CONNECT TO PIN 6
PIN 6 CONNECT TO PIN 5
PIN 7 GND
PIN 8 FACTORY USE (MAKE NO CONNECTION)
PIN 9 CLK D OUTPUT
PIN10 FACTORY USE (MAKE NO CONNECTION)
PIN 11 FACTORY USE (MAKE NO CONNECTION)
PIN 12 FACTORY USE (MAKE NO CONNECTION)
PIN 13 CLK A OUTPUT
PIN 14 CLK B OUTPUT

SMD

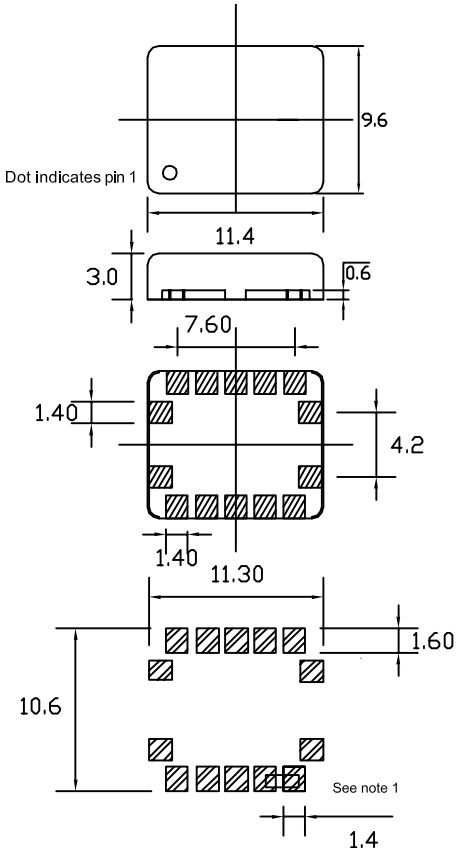

PIN FUNCTION
PIN 1 FACTORY USE (MAKE NO CONNECTION)
PIN 2 OE
PIN 3 VDD
PIN 4 CLK C OUTPUT
PIN 5 CONNECT TO PIN 6
PIN 6 CONNECT TO PIN 5
PIN 7 GND
PIN 8 FACTORY USE (MAKE NO CONNECTION)
PIN 9 CLK D OUTPUT
PIN10 FACTORY USE (MAKE NO CONNECTION)
PIN 11 FACTORY USE (MAKE NO CONNECTION)
PIN 12 FACTORY USE (MAKE NO CONNECTION)
PIN 13 CLK A OUTPUT
PIN 14 CLK B OUTPUT

Dimensions in mm
Recommended solder pad layout

Note1:
For proper operation pin 5 must be connected to pin 6

Cardinal Components, Inc.
155 Route 46 West
Wayne, NJ 07470
Rev: M-090414-14

TEL: (973)785-1333
E-MAIL: sales@cardinalxtal.com
WEB: http://www.cardinalxtal.com

Factory Prog. 5 Output CMOS Oscillator

- *Full Custom Multi-Frequency Programmable Osc*
- *Reduced EMI by turning off unused output*
- *Factory Programmable*
- *Industry-standard packaging saves on board space*
- *Mult. outputs 1 pkg vs. mult. osc & assoc. comp.*
- *Lower system cost*
- *Increased Integration*

Applications

- *High-end multimedia*
- *Communications*
- *Industrial*
- *A/D converters*
- *Consumer Applications*
- *Product differentiation*
- *Low-power applications*

Series CCE5C

Pb RoHS COMPLIANT 2002 / 95 / EC

Part Numbering Example: CCE5C 1A 200.0 / 150.0 / 125.0 / 100.0 / 75.0

CCE5C	1A	200	150	125	100	75
SERIES	PACKAGE STYLE	FREQUENCY A	FREQUENCY B	FREQUENCY C	FREQUENCY D	FREQUENCY E
	1A=14 pin dip 9=9.6x11.4 SMD	0.2 - 200 MHz	0.2 - 200 MHz	0.2 - 200 MHz	0.2 - 200 MHz	25 - 200 MHz

Specifications:	Min	Typ	Max	Unit
Frequency Range:				
Output A CMOS	0.2		200	MHz
Output B CMOS	0.2		200	MHz
Output C CMOS	0.2		200	MHz
Output D CMOS	0.2		200	MHz
Output E CMOS	25		200	MHz
Available Stability Options:	-50		50	ppm
Supply Voltage:	3.135	3.3	3.465	V
Operating Temperature Range Options:	-40		85	°C
Storage Temperature:	-55		125	°C
Duty Cycle:	40 45		60 55	% %
Start-Up Time:		3	10	mS
Aging (PPM/1st Year): Ta=25C, Vdd=3.3V			±5	
Static Discharge Voltage Mil-Std 883, method 3015	2000			V
Output Load:				
CMOS, < 40 MHz			30	pF
CMOS, ≥ 40 MHz			15	pF
Output Level:	CMOS			
Packaging:	25 / Tube Tape & Reel			14 pin SMD

Notes: Recommended .01 µF bypass capacitor from Vcc to GND. Capacitor should be as close to oscillator as possible.

Cardinal Components, Inc.
155 Route 46 West
Wayne, NJ 07470
Rev: M-090414-14

TEL: (973)785-1333
E-MAIL: sales@cardinalxtal.com
WEB: http://www.cardinalxtal.com

Factory Prog. 5 Output CMOS Oscillator

Series **CCE5C**

Electrical Characteristics

	Description	Conditions	Min	Typ	Max	Unit
Ioh	Output High Current	Voh = (L)Vdd - 0.5, (L)Vdd = 3.3 V	12	24		mA
Iol	Output Low Current	Vol = .5, (L)Vdd = 3.3 V	12	24		mA
Vih	High Level Input Voltage	CMOS levels, % of Vdd	0.7			V
Vil	Low-Level Input Voltage	CMOS levels, % of Vdd			0.3	V
Iih	Input High Current	Vin = AVdd - 0.3 V		<1	10	µA
Iil	Input Low Current	Vin = + 0.3 V		<1	10	µA
Ioz	Output Leakage Current	tri-state outputs			10	µA
Idd	Total Power Supply Current	Example 1: 1 output@200 MHz; 1 output@66.666 MHz 1 output@100 MHz; 1 output@50 MHz 1 output@25 MHz Example 2: 1 output@200 Mhz; 1 output@155.52 MHz 1 output@100 Mhz; 1 output@77.76 MHz 1 output@50 Mhz		35 39		mA mA
Idds	Shutdown Power Supply Curr	Shutdown active		5	20	µA

Output Clock Switching Characteristics

	Description	Conditions	Min	Typ	Max	Unit
1/t1	Output Frequency	Clock output limit, CMOS, Commercial			200	MHz
t3	Rising Edge Slew Rate	Output clock rise time, 20% – 80% Vdd	0.75	1.4		nS
t4	Falling Edge Slew Rate	Output clock fall time, 20% – 80% Vdd	0.75	1.4		nS
t5	Output tri-state timing after SD/OE switches	Time for output to enter/leave tri-state mode		150	300	nS
t6	Clock Jitter measured at Vdd/2	Peak-to-Peak period jitter, CLK outputs		200		pS

ALL OUTPUTS, DUTY CYCLE, RISE/FALL TIME

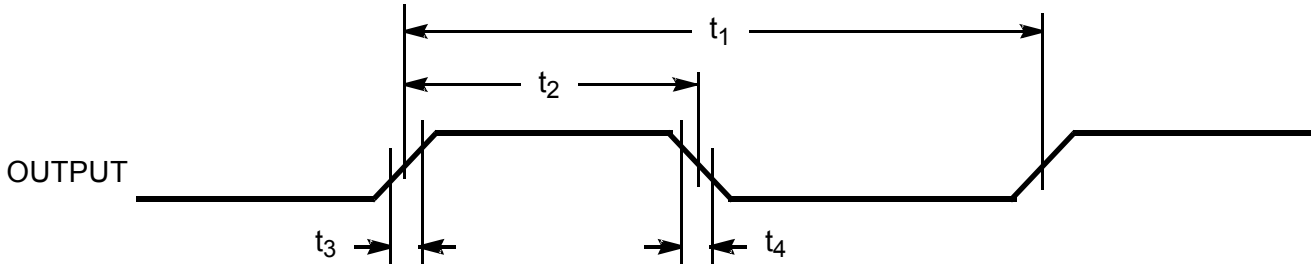

OUTPUT 3-STATE TIMING

CLK OUTPUT JITTER

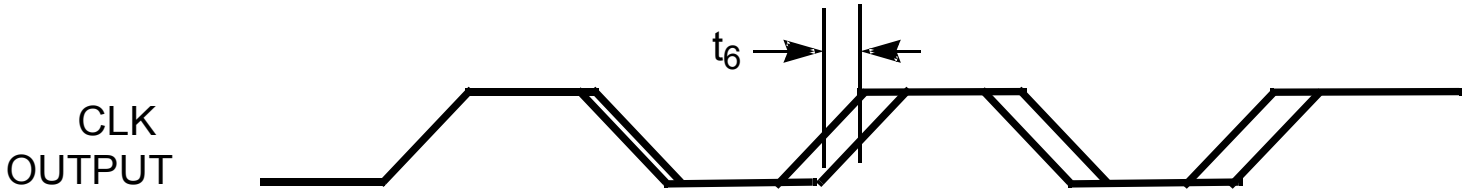

DIP

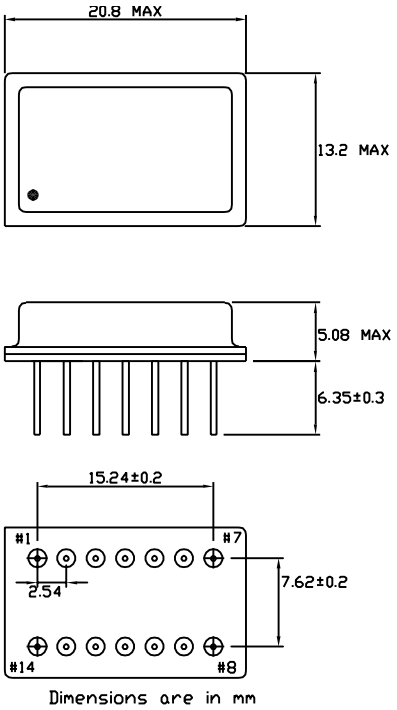

PIN FUNCTION
PIN 1 OE (CONNECT TO VDD)
PIN 2 SUSPEND (CONNECT TO GND)
PIN 3 VDD
PIN 4 CLK C OUTPUT
PIN 5 CONNECT TO PIN 6
PIN 6 CONNECT TO PIN 5
PIN 7 GND
PIN 8 FACTORY USE (MAKE NO CONNECTION)
PIN 9 CLK D OUTPUT
PIN10 CLK E OUTPUT
PIN 11 FACTORY USE (MAKE NO CONNECTION)
PIN 12 FACTORY USE (MAKE NO CONNECTION)
PIN 13 CLK A OUTPUT
PIN 14 CLK B OUTPUT

SMD

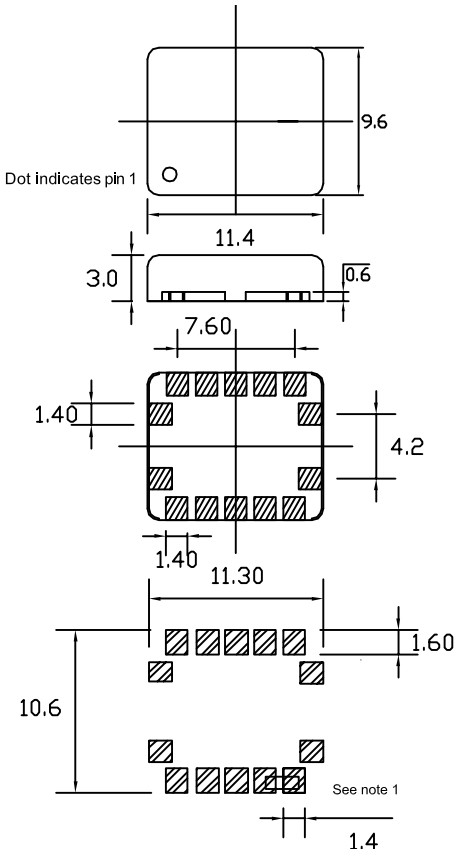

PIN FUNCTION
PIN 1 FACTORY USE (MAKE NO CONNECTION)
PIN 2 OE
PIN 3 VDD
PIN 4 CLK C OUTPUT
PIN 5 CONNECT TO PIN 6
PIN 6 CONNECT TO PIN 5
PIN 7 GND
PIN 8 FACTORY USE (MAKE NO CONNECTION)
PIN 9 CLK D OUTPUT
PIN10 CLK E OUTPUT
PIN 11 FACTORY USE (MAKE NO CONNECTION)
PIN 12 FACTORY USE (MAKE NO CONNECTION)
PIN 13 CLK A OUTPUT
PIN 14 CLK B OUTPUT

Dimensions in mm
Recommended solder pad layout

Note1:
For proper operation pin 5 must be connected to pin 6

Cardinal Components, Inc.
155 Route 46 West
Wayne, NJ 07470

TEL: (973)785-1333
E-MAIL: sales@cardinalxtal.com
WEB: http://www.cardinalxtal.com

Factory Prog. 6 Output CMOS Oscillator

- *Full Custom Multi-Frequency Programmable Osc*
- *Reduced EMI by turning off unused output*
- *Factory Programmable*
- *Industry-standard packaging saves on board space*
- *Mult. outputs 1 pkg vs. mult. osc & assoc. comp.*
- *Lower system cost*
- *Increased Integration*

Applications

- *High-end multimedia*
- *Communications*
- *Industrial*
- *A/D converters*
- *Consumer Applications*
- *Product differentiation*
- *Low-power applications*

Series CCE6C

Pb RoHS COMPLIANT 2002 / 95 / EC

Part Numbering Example: CCE6C 1A 200.0 / 150.0 / 125.0 / 100.0 / 75.0 / 12.0

CCE6C	1A	200	150	125	100	75	12
SERIES	PACKAGE STYLE	FREQUENCY A	FREQUENCY B	FREQUENCY C	FREQUENCY D	FREQUENCY E	FREQUENCY R
	1A=14 pin dip 9=9.6x11.4 SMD	0.2 - 200 MHz	0.2 - 200 MHz	0.2 - 200 MHz	0.2 - 200 MHz	25 - 200 MHz	

Specifications:	Min	Typ	Max	Unit
Frequency Range:				
Output A CMOS	0.2		200	MHz
Output B CMOS	0.2		200	MHz
Output C CMOS	0.2		200	MHz
Output D CMOS	0.2		200	MHz
Output E CMOS	25		200	MHz
Output R Fixed		12		MHz
Available Stability Options:	-50		50	ppm
Supply Voltage:	3.135	3.3	3.465	V
Operating Temperature Range Options:	-40		85	°C
Storage Temperature:	-55		125	°C
Duty Cycle:	40 45		60 55	% %
Start-Up Time:		3	10	mS
Aging (PPM/1st Year): Ta=25C, Vdd=3.3V			±5	
Static Discharge Voltage Mil-Std 883, method 3015	2000			V
Output Load:				
CMOS, < 40 MHz			30	pF
CMOS, ≥ 40 MHz			15	pF
Output Level:	CMOS			
Packaging:	25 / Tube Tape & Reel			14 pin SMD

Notes: Recommended .01 µF bypass capacitor from Vcc to GND. Capacitor should be as close to oscillator as possible.

Cardinal Components, Inc.
155 Route 46 West
Wayne, NJ 07470
Rev: M-090414-14

TEL: (973)785-1333
E-MAIL: sales@cardinalxtal.com
WEB: http://www.cardinalxtal.com

Factory Prog. 6 Output CMOS Oscillator

Series **CCE6C**

Electrical Characteristics

	Description	Conditions	Min	Typ	Max	Unit
Ioh	Output High Current	Voh = (L)Vdd - 0.5, (L)Vdd = 3.3 V	12	24		mA
Iol	Output Low Current	Vol = .5, (L)Vdd = 3.3 V	12	24		mA
Vih	High Level Input Voltage	CMOS levels, % of Vdd	0.7			V
Vil	Low-Level Input Voltage	CMOS levels, % of Vdd			0.3	V
Iih	Input High Current	Vin = AVdd - 0.3 V		<1	10	µA
Iil	Input Low Current	Vin = + 0.3 V		<1	10	µA
Ioz	Output Leakage Current	tri-state outputs			10	µA
Idd	Total Power Supply Current	Example 1: 1 output@200 MHz; 1 output@66.666 MHz 1 output@100 MHz; 1 output@50 MHz 1 output@25 MHz; 1 output@12 MHz; Example 2: 1 output@200 Mhz; 1 output@155.52 MHz 1 output@100 Mhz; 1 output@77.76 MHz 1 output@50 Mhz; 1 output@12 MHz;		50 100		mA mA
Idds	Shutdown Power Supply Curr	Shutdown active		5	20	µA

Output Clock Switching Characteristics

	Description	Conditions	Min	Typ	Max	Unit
1/t1	Output Frequency	Clock output limit, CMOS, Commercial			200	MHz
t3	Rising Edge Slew Rate	Output clock rise time, 20% – 80% Vdd	0.75	1.4		nS
t4	Falling Edge Slew Rate	Output clock fall time, 20% – 80% Vdd	0.75	1.4		nS
t5	Output tri-state timing after SD/OE switches	Time for output to enter/leave tri-state mode		150	300	nS
t6	Clock Jitter measured at Vdd/2	Peak-to-Peak period jitter, CLK outputs		200		pS

Cardinal Components, Inc.
155 Route 46 West
Wayne, NJ 07470

TEL: (973)785-1333
E-MAIL: sales@cardinalxtal.com
WEB: http://www.cardinalxtal.com

ALL OUTPUTS, DUTY CYCLE, RISE/FALL TIME

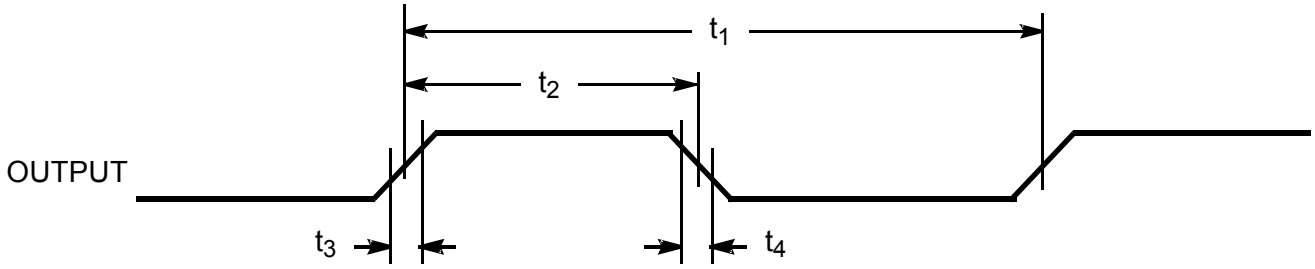

OUTPUT 3-STATE TIMING

CLK OUTPUT JITTER

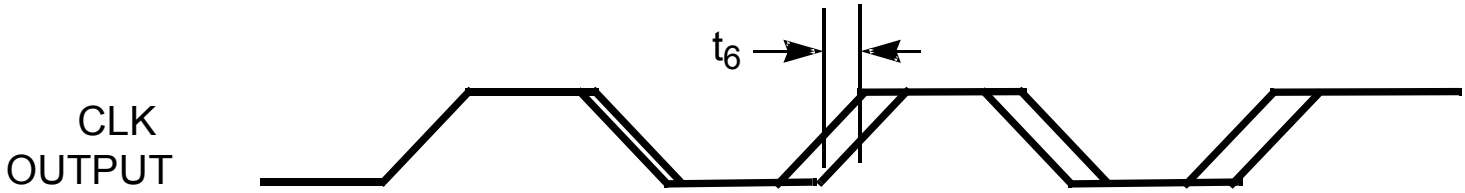

DIP

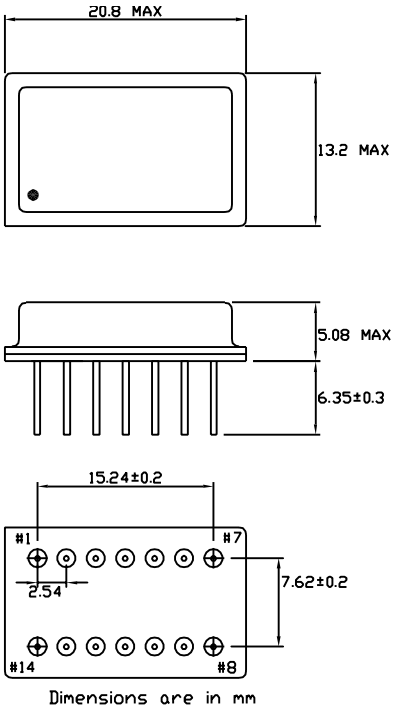

PIN FUNCTION
PIN 1 OE (CONNECT TO VDD)
PIN 2 SUSPEND (CONNECT TO GND)
PIN 3 VDD
PIN 4 CLK C OUTPUT
PIN 5 CONNECT TO PIN 6
PIN 6 CONNECT TO PIN 5
PIN 7 GND
PIN 8 12 MHz REF CLOCK OUTPUT
PIN 9 CLK D OUTPUT
PIN10 CLK E OUTPUT
PIN 11 FACTORY USE (MAKE NO CONNECTION)
PIN 12 FACTORY USE (MAKE NO CONNECTION)
PIN 13 CLK A OUTPUT
PIN 14 CLK B OUTPUT

SMD

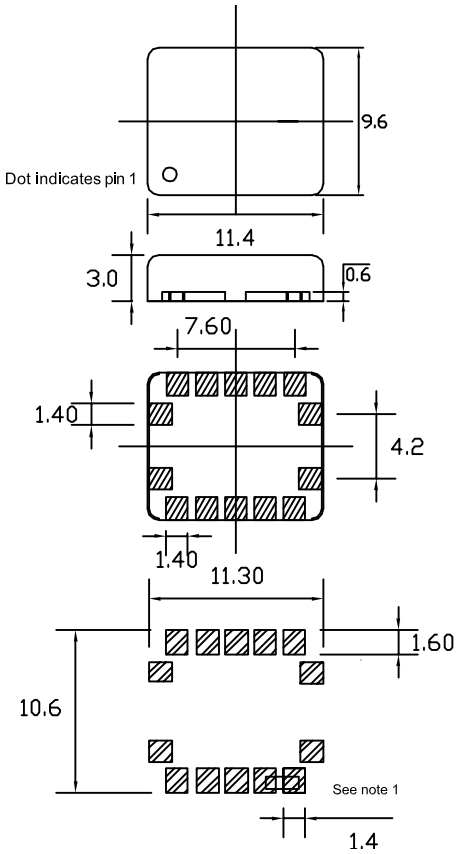

PIN FUNCTION
PIN 1 FACTORY USE (MAKE NO CONNECTION)
PIN 2 OE
PIN 3 VDD
PIN 4 CLK C OUTPUT
PIN 5 CONNECT TO PIN 6
PIN 6 CONNECT TO PIN 5
PIN 7 GND
PIN 8 12 MHz REF CLOCK OUTPUT
PIN 9 CLK D OUTPUT
PIN10 CLK E OUTPUT
PIN 11 FACTORY USE (MAKE NO CONNECTION)
PIN 12 FACTORY USE (MAKE NO CONNECTION)
PIN 13 CLK A OUTPUT
PIN 14 CLK B OUTPUT

Dimensions in mm
Recommended solder pad layout

Note1:
For proper operation pin 5 must be connected to pin 6

Cardinal Components, Inc.
155 Route 46 West
Wayne, NJ 07470
Rev: M-090414-14

TEL: (973)785-1333
E-MAIL: sales@cardinalxtal.com
WEB: http://www.cardinalxtal.com

Factory Prog. 2 Output CMOS TCXO

- *Full Custom Multi-Frequency Programmable Osc*
- *Reduced EMI by turning off unused output*
- *Factory Programmable*
- *Industry-standard packaging saves on board space*
- *Mult. outputs 1 pkg vs. mult. osc & assoc. comp.*
- *Performs well under all conditions*
- *Increased integration*

Applications

- *High-end multimedia*
- *Communications*
- *Industrial*
- *A/D converters*
- *Consumer Applications*
- *Low tolerance applications*
- *Low-power applications*

Series CCT2C

Pb RoHS COMPLIANT 2002 / 95 / EC

Part Numbering Example: CCT2C 1A 200.0 / 150.0

CCT2C	1A	200	150
SERIES	PACKAGE STYLE	FREQUENCY A	FREQUENCY B
	1A=14 pin dip 9=9.6x11.4 SMD	0.2 - 200 MHz	0.2 - 200 MHz

Specifications:	Min	Typ	Max	Unit
Frequency Range: Output A CMOS Output B CMOS	 0.2 0.2		 200 200	 MHz MHz
Available Stability Options:	-2.5		2.5	ppm
Supply Voltage:	3.135	3.3	3.465	V
Operating Temperature Range Options:	-40		85	°C
Storage Temperature:	-55		125	°C
Duty Cycle:	40 45		60 55	% %
Start-Up Time:		3	10	mS
Aging (PPM/1st Year): Ta=25C, Vdd=3.3V			±1	ppm
Static Discharge Voltage Mil-Std 883, method 3015	2000			V
Output Load: CMOS, < 40 MHz CMOS, ≥ 40 MHz			 30 15	 pF pF
Output Level:	CMOS			
Packaging:	25 / Tube Tape & Reel			14 pin SMD

Notes: Recommended .01 µF bypass capacitor from Vcc to GND. Capacitor should be as close to oscillator as possible.

Cardinal Components, Inc.
155 Route 46 West
Wayne, NJ 07470
Rev: M-090414-14

TEL: (973)785-1333
E-MAIL: sales@cardinalxtal.com
WEB: http://www.cardinalxtal.com

Factory Prog. 2 Output CMOS TCXO

Series **CCT2C**

Electrical Characteristics

	Description	Conditions	Min	Typ	Max	Unit
Ioh	Output High Current	Voh = (L)Vdd - 0.5, (L)Vdd = 3.3 V	12	24		mA
Iol	Output Low Current	Vol = .5, (L)Vdd = 3.3 V	12	24		mA
Vih	High Level Input Voltage	CMOS levels, % of Vdd	0.7			V
Vil	Low-Level Input Voltage	CMOS levels, % of Vdd			0.3	V
Iih	Input High Current	Vin = AVdd - 0.3 V		<1	10	µA
Iil	Input Low Current	Vin = + 0.3 V		<1	10	µA
Ioz	Output Leakage Current	tri-state outputs			10	µA
Idd	Total Power Supply Current	1 output@19.44 MHz; 1 output@77.76 MHz 1 output@155.22 Mhz; 1 output@200 MHz		15 26		mA mA
Idds	Shutdown Power Supply Curr	Shutdown active		5	20	µA

Output Clock Switching Characteristics

	Description	Conditions	Min	Typ	Max	Unit
1/t1	Output Frequency	Clock output limit, CMOS, Commercial			200	MHz
t3	Rising Edge Slew Rate	Output clock rise time, 20% – 80% Vdd	0.75	1.4		nS
t4	Falling Edge Slew Rate	Output clock fall time, 20% – 80% Vdd	0.75	1.4		nS
t5	Output tri-state timing after SD/OE switches	Time for output to enter/leave tri-state mode		150	300	nS
t6	Clock Jitter measured at Vdd/2	Peak-to-Peak period jitter, CLK outputs		200		pS

ALL OUTPUTS, DUTY CYCLE, RISE/FALL TIME

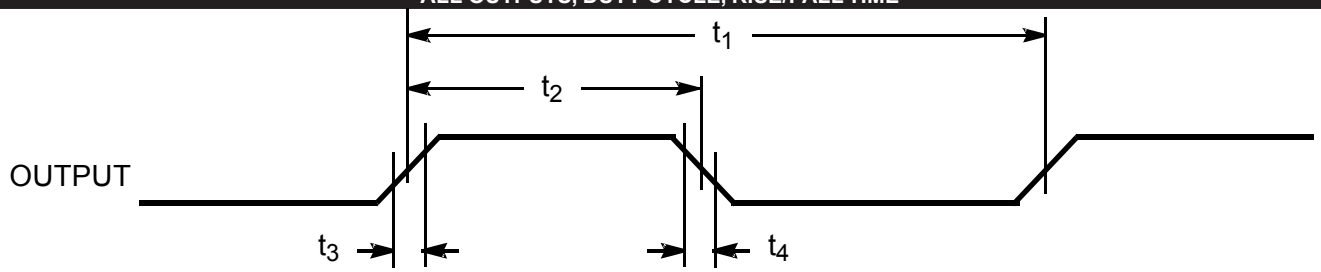

OUTPUT 3-STATE TIMING

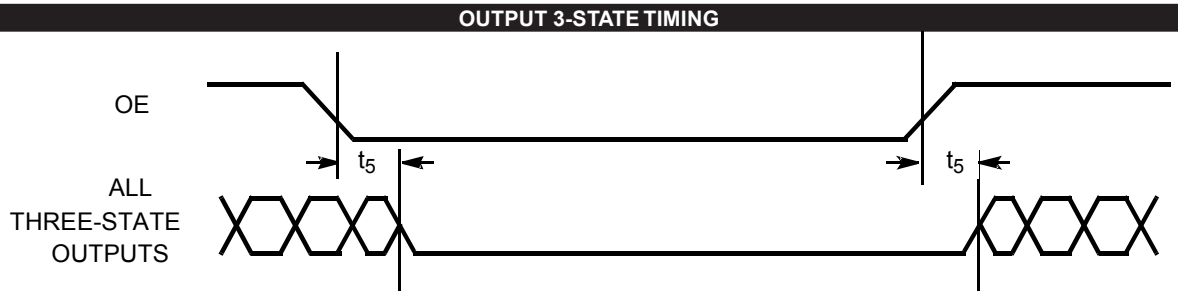

CLK OUTPUT JITTER

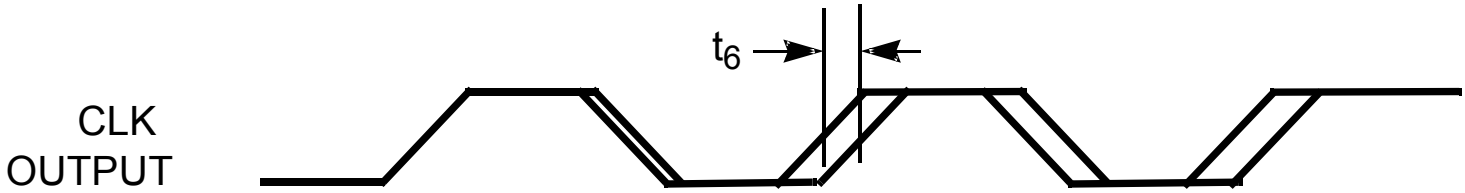

DIP

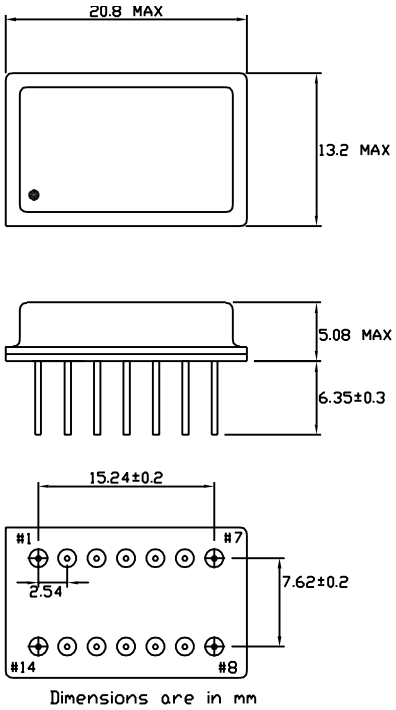

PIN FUNCTION
PIN 1 OE (CONNECT TO VDD)
PIN 2 SUSPEND (CONNECT TO GND)
PIN 3 VDD
PIN 4 FACTORY USE (MAKE NO CONNECTION)
PIN 5 CONNECT TO PIN 6
PIN 6 CONNECT TO PIN 5
PIN 7 GND
PIN 8 FACTORY USE (MAKE NO CONNECTION)
PIN 9 FACTORY USE (MAKE NO CONNECTION)
PIN10 FACTORY USE (MAKE NO CONNECTION)
PIN 11 FACTORY USE (MAKE NO CONNECTION)
PIN 12 FACTORY USE (MAKE NO CONNECTION)
PIN 13 CLK A OUTPUT
PIN 14 CLK B OUTPUT

SMD

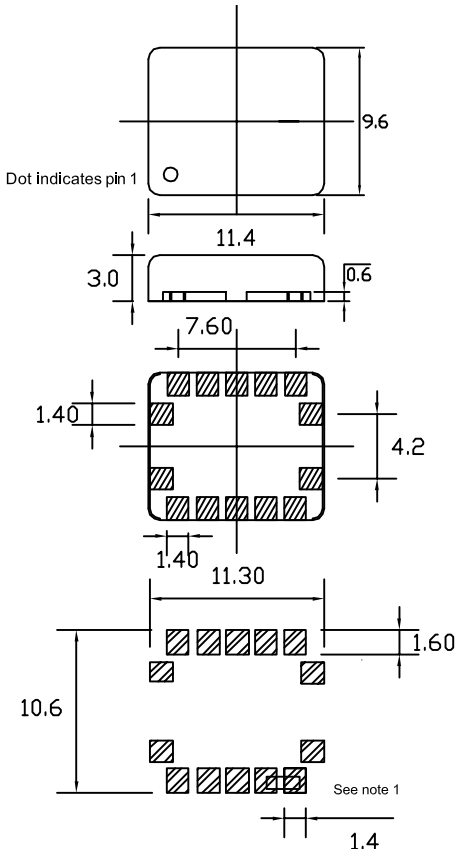

PIN FUNCTION
PIN 1 FACTORY USE (MAKE NO CONNECTION)
PIN 2 OE
PIN 3 VDD
PIN 4 FACTORY USE (MAKE NO CONNECTION)
PIN 5 CONNECT TO PIN 6
PIN 6 CONNECT TO PIN 5
PIN 7 GND
PIN 8 FACTORY USE (MAKE NO CONNECTION)
PIN 9 FACTORY USE (MAKE NO CONNECTION)
PIN10 FACTORY USE (MAKE NO CONNECTION)
PIN 11 FACTORY USE (MAKE NO CONNECTION)
PIN 12 FACTORY USE (MAKE NO CONNECTION)
PIN 13 CLK A OUTPUT
PIN 14 CLK B OUTPUT

Dimensions in mm
Recommended solder pad layout

Note1:
For proper operation pin 5 must be connected to pin 6

Cardinal Components, Inc.
155 Route 46 West
Wayne, NJ 07470
Rev: M-090414-14

TEL: (973)785-1333
E-MAIL: sales@cardinalxtal.com
WEB: http://www.cardinalxtal.com

Factory Prog. 4 Output CMOS TCXO

- *Full Custom Multi-Frequency Programmable Osc*
- *Reduced EMI by turning off unused output*
- *Factory Programmable*
- *Industry-standard packaging saves on board space*
- *Mult. outputs 1 pkg vs. mult. osc & assoc. comp.*
- *Performs well under all conditions*
- *Increased Integration*

Applications

- *High-end multimedia*
- *Communications*
- *Industrial*
- *A/D converters*
- *Consumer Applications*
- *Low tolerance applications*
- *Low-power applications*

Series CCT4C

Pb RoHS COMPLIANT 2002 / 95 / EC

Part Numbering Example: CCT4C 1A 200.0 / 150.0 / 125.0 / 100.0

CCT4C	1A	200	150	125	100
SERIES	PACKAGE STYLE	FREQUENCY A	FREQUENCY B	FREQUENCY C	FREQUENCY D
	1A=14 pin dip 9=9.6x11.4 SMD	0.2 - 200 MHz	0.2 - 200 MHz	0.2 - 200 MHz	0.2 - 200 MHz

Specifications:	Min	Typ	Max	Unit
Frequency Range:				
Output A CMOS	0.2		200	MHz
Output B CMOS	0.2		200	MHz
Output C CMOS	0.2		200	MHz
Output D CMOS	0.2		200	MHz
Available Stability Options:	-2.5		2.5	ppm
Supply Voltage:	3.135	3.3	3.465	V
Operating Temperature Range Options:	-40		85	°C
Storage Temperature:	-55		125	°C
Duty Cycle:	40 45		60 55	% %
Start-Up Time:		3	10	mS
Aging (PPM/1st Year): Ta=25C, Vdd=3.3V			±1	ppm
Static Discharge Voltage Mil-Std 883, method 3015	2000			V
Output Load:				
CMOS, < 40 MHz			30	pF
CMOS, ≥ 40 MHz			15	pF
Output Level:	CMOS			
Packaging:	25 / Tube Tape & Reel			14 pin SMD

Notes: Recommended .01 µF bypass capacitor from Vcc to GND. Capacitor should be as close to oscillator as possible.

Cardinal Components, Inc.
155 Route 46 West
Wayne, NJ 07470
Rev: M-090414-14

TEL: (973)785-1333
E-MAIL: sales@cardinalxtal.com
WEB: http://www.cardinalxtal.com

Factory Prog. 4 Output CMOS TCXO

Series **CCT4C**

Electrical Characteristics

	Description	Conditions	Min	Typ	Max	Unit
Ioh	Output High Current	Voh = (L)Vdd - 0.5, (L)Vdd = 3.3 V	12	24		mA
Iol	Output Low Current	Vol = .5, (L)Vdd = 3.3 V	12	24		mA
Vih	High Level Input Voltage	CMOS levels, % of Vdd	0.7			V
Vil	Low-Level Input Voltage	CMOS levels, % of Vdd			0.3	V
Iih	Input High Current	Vin = AVdd - 0.3 V		<1	10	µA
Iil	Input Low Current	Vin = + 0.3 V		<1	10	µA
Ioz	Output Leakage Current	tri-state outputs			10	µA
Idd	Total Power Supply Current	Example 1: 1 output@19.44 MHz; 1 output@38.88 MHz 1 output@77.76 Mhz; 1 output@155.52 MHz Example 2: 1 output@50 MHz; 1 output@106.25 MHz 1 output@200 Mhz; 1 output@155.52 MHz		26 38		mA mA
Idds	Shutdown Power Supply Curr	Shutdown active		5	20	µA

Output Clock Switching Characteristics

	Description	Conditions	Min	Typ	Max	Unit
1/t1	Output Frequency	Clock output limit, CMOS, Commercial			200	MHz
t3	Rising Edge Slew Rate	Output clock rise time, 20% – 80% Vdd	0.75	1.4		nS
t4	Falling Edge Slew Rate	Output clock fall time, 20% – 80% Vdd	0.75	1.4		nS
t5	Output tri-state timing after SD/OE switches	Time for output to enter/leave tri-state mode		150	300	nS
t6	Clock Jitter measured at Vdd/2	Peak-to-Peak period jitter, CLK outputs		200		pS

ALL OUTPUTS, DUTY CYCLE, RISE/FALL TIME

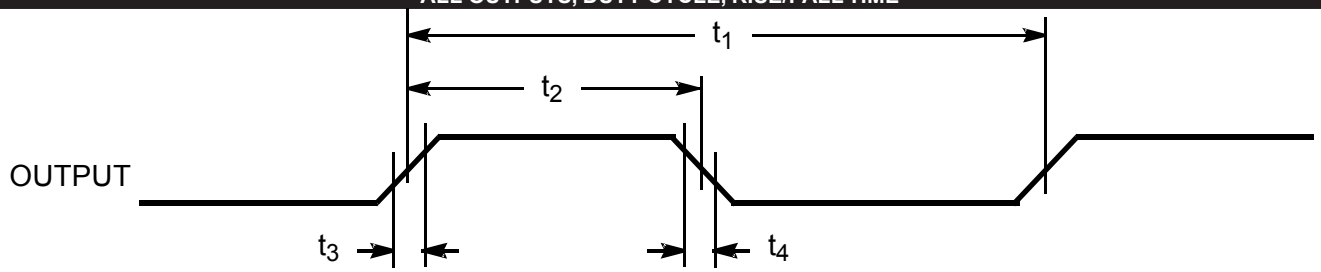

OUTPUT 3-STATE TIMING

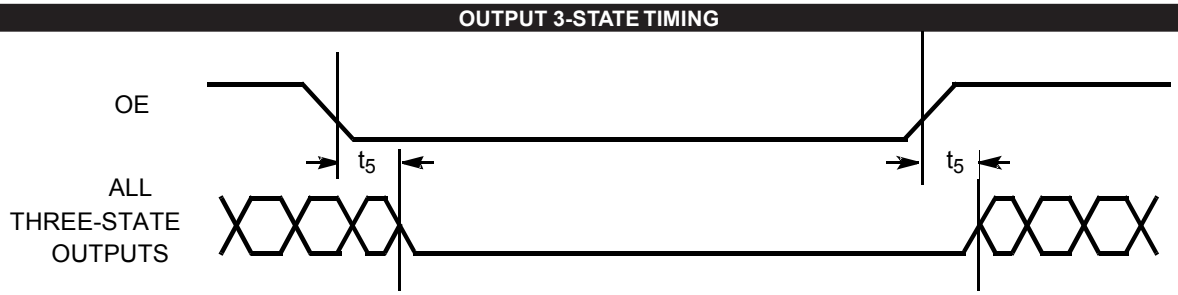

CLK OUTPUT JITTER

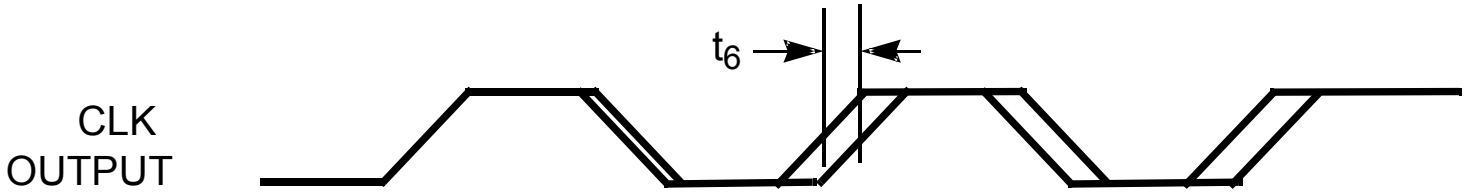

DIP

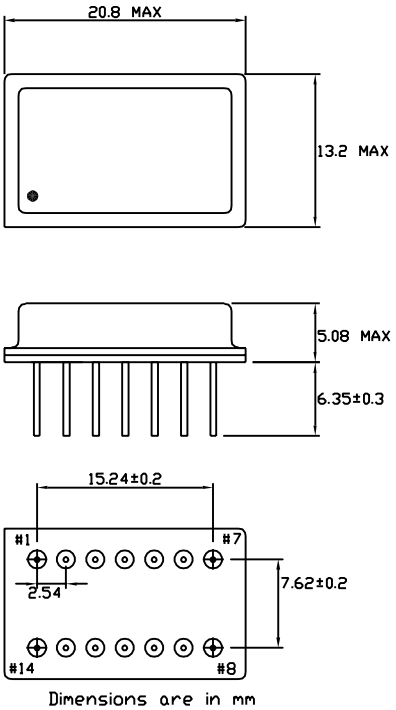

PIN FUNCTION
PIN 1 OE (CONNECT TO VDD)
PIN 2 SUSPEND (CONNECT TO GND)
PIN 3 VDD
PIN 4 CLK C OUTPUT
PIN 5 CONNECT TO PIN 6
PIN 6 CONNECT TO PIN 5
PIN 7 GND
PIN 8 FACTORY USE (MAKE NO CONNECTION)
PIN 9 CLK D OUTPUT
PIN10 FACTORY USE (MAKE NO CONNECTION)
PIN 11 FACTORY USE (MAKE NO CONNECTION)
PIN 12 FACTORY USE (MAKE NO CONNECTION)
PIN 13 CLK A OUTPUT
PIN 14 CLK B OUTPUT

SMD

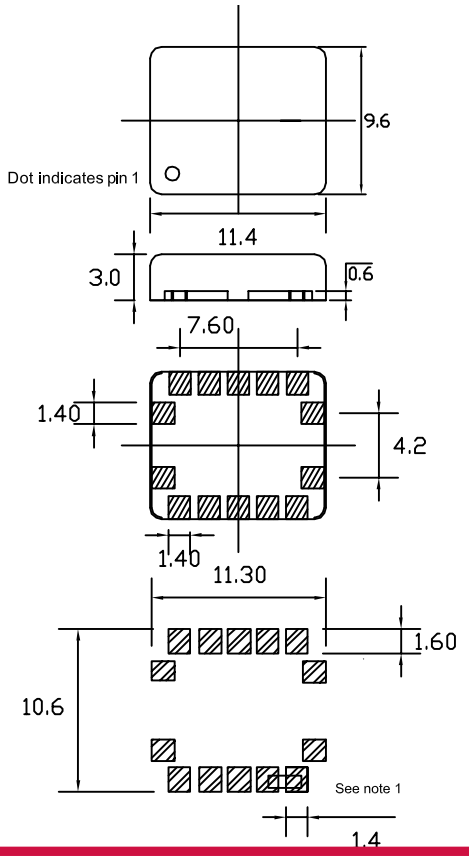

PIN FUNCTION
PIN 1 FACTORY USE (MAKE NO CONNECTION)
PIN 2 OE
PIN 3 VDD
PIN 4 CLK C OUTPUT
PIN 5 CONNECT TO PIN 6
PIN 6 CONNECT TO PIN 5
PIN 7 GND
PIN 8 FACTORY USE (MAKE NO CONNECTION)
PIN 9 CLK D OUTPUT
PIN10 FACTORY USE (MAKE NO CONNECTION)
PIN 11 FACTORY USE (MAKE NO CONNECTION)
PIN 12 FACTORY USE (MAKE NO CONNECTION)
PIN 13 CLK A OUTPUT
PIN 14 CLK B OUTPUT

Dimensions in mm
Recommended solder pad layout

Note1:
For proper operation pin 5 must be connected to pin 6

Factory Prog. 5 Output CMOS TCXO

- *Full Custom Multi-Frequency Programmable Osc*
- *Reduced EMI by turning off unused output*
- *Factory Programmable*
- *Industry-standard packaging saves on board space*
- *Mult. outputs 1 pkg vs. mult. osc & assoc. comp.*
- *Performs well under all conditions*
- *Increased Integration*

Applications

- *High-end multimedia*
- *Communications*
- *Industrial*
- *A/D converters*
- *Consumer Applications*
- *Low tolerance applications*
- *Low-power applications*

Series CCT5C

Pb RoHS COMPLIANT 2002 / 95 / EC

Part Numbering Example: CCT5C 1A 200.0 / 150.0 / 125.0 / 100.0 / 75.0

CCT5C	1A	200	150	125	100	75
SERIES	PACKAGE STYLE	FREQUENCY A	FREQUENCY B	FREQUENCY C	FREQUENCY D	FREQUENCY E
	1A=14 pin dip 9=9.6x11.4 SMD	0.2 - 200 MHz	0.2 - 200 MHz	0.2 - 200 MHz	0.2 - 200 MHz	25 - 200 MHz

Specifications:	Min	Typ	Max	Unit
Frequency Range:				
Output A CMOS	0.2		200	MHz
Output B CMOS	0.2		200	MHz
Output C CMOS	0.2		200	MHz
Output D CMOS	0.2		200	MHz
Output E CMOS	25		200	MHz
Available Stability Options:	-2.5		2.5	ppm
Supply Voltage:	3.135	3.3	3.465	V
Operating Temperature Range Options:	-40		85	°C
Storage Temperature:	-55		125	°C
Duty Cycle:	40 45		60 55	% %
Start-Up Time:		3	10	mS
Aging (PPM/1st Year): Ta=25C, Vdd=3.3V			±1	ppm
Static Discharge Voltage Mil-Std 883, method 3015	2000			V
Output Load:				
CMOS, < 40 MHz			30	pF
CMOS, ≥ 40 MHz			15	pF
Output Level:	CMOS			
Packaging:	25 / Tube Tape & Reel			14 pin SMD

Notes: Recommended .01 µF bypass capacitor from Vcc to GND. Capacitor should be as close to oscillator as possible.

Cardinal Components, Inc.
155 Route 46 West
Wayne, NJ 07470
Rev: M-090414-14

TEL: (973)785-1333
E-MAIL: sales@cardinalxtal.com
WEB: http://www.cardinalxtal.com

Factory Prog. 5 Output CMOS TCXO

Series **CCT5C**

Electrical Characteristics

	Description	Conditions	Min	Typ	Max	Unit
Ioh	Output High Current	Voh = (L)Vdd - 0.5, (L)Vdd = 3.3 V	12	24		mA
Iol	Output Low Current	Vol = .5, (L)Vdd = 3.3 V	12	24		mA
Vih	High Level Input Voltage	CMOS levels, % of Vdd	0.7			V
Vil	Low-Level Input Voltage	CMOS levels, % of Vdd			0.3	V
Iih	Input High Current	Vin = AVdd - 0.3 V		<1	10	µA
Iil	Input Low Current	Vin = + 0.3 V		<1	10	µA
Ioz	Output Leakage Current	tri-state outputs			10	µA
Idd	Total Power Supply Current	Example 1: 1 output@200 MHz; 1 output@66.666 MHz 1 output@100 MHz; 1 output@50 MHz 1 output@25 MHz Example 2: 1 output@200 Mhz; 1 output@155.52 MHz 1 output@100 Mhz; 1 output@77.76 MHz 1 output@50 Mhz		35 39		mA mA
Idds	Shutdown Power Supply Curr	Shutdown active		5	20	µA

Output Clock Switching Characteristics

	Description	Conditions	Min	Typ	Max	Unit
1/t1	Output Frequency	Clock output limit, CMOS, Commercial			200	MHz
t3	Rising Edge Slew Rate	Output clock rise time, 20% – 80% Vdd	0.75	1.4		nS
t4	Falling Edge Slew Rate	Output clock fall time, 20% – 80% Vdd	0.75	1.4		nS
t5	Output tri-state timing after SD/OE switches	Time for output to enter/leave tri-state mode		150	300	nS
t6	Clock Jitter measured at Vdd/2	Peak-to-Peak period jitter, CLK outputs		200		pS

ALL OUTPUTS, DUTY CYCLE, RISE/FALL TIME

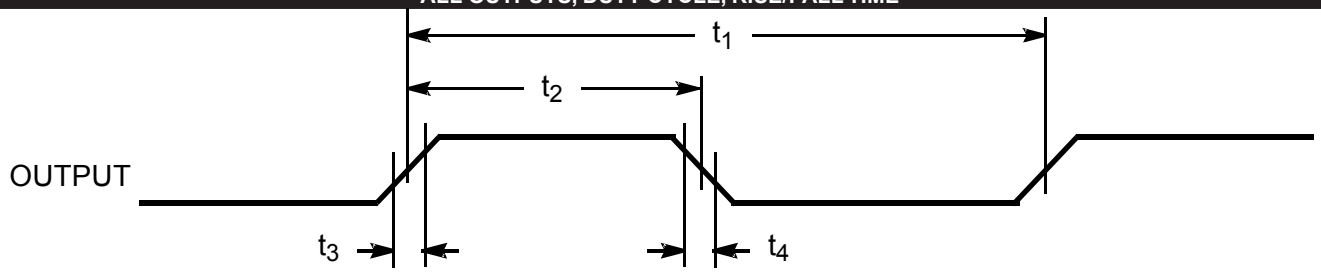

OUTPUT 3-STATE TIMING

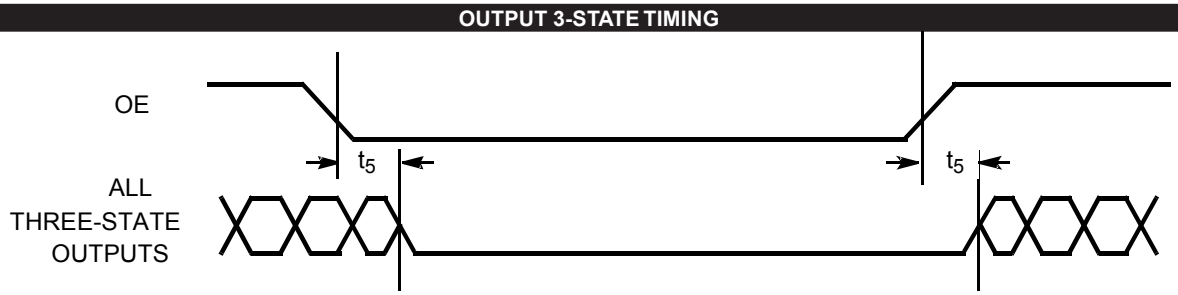

CLK OUTPUT JITTER

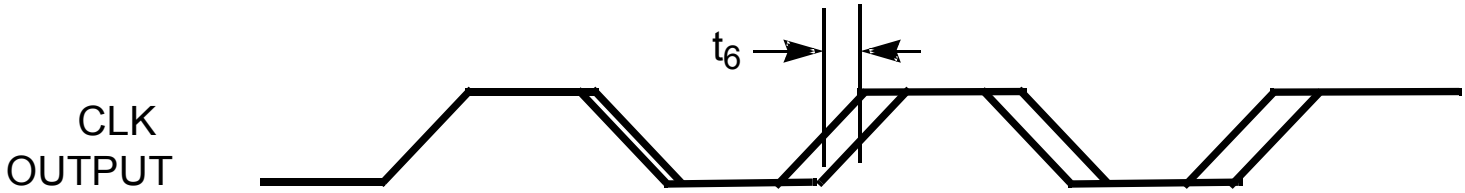

DIP

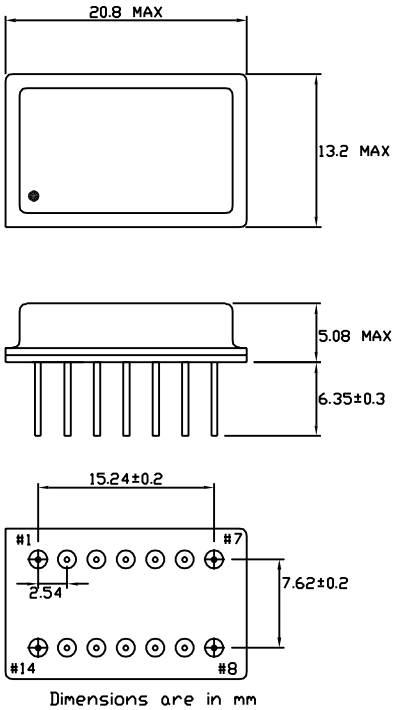

PIN FUNCTION
PIN 1 OE (CONNECT TO VDD)
PIN 2 SUSPEND (CONNECT TO GND)
PIN 3 VDD
PIN 4 CLK C OUTPUT
PIN 5 CONNECT TO PIN 6
PIN 6 CONNECT TO PIN 5
PIN 7 GND
PIN 8 FACTORY USE (MAKE NO CONNECTION)
PIN 9 CLK D OUTPUT
PIN10 CLK E OUTPUT
PIN 11 FACTORY USE (MAKE NO CONNECTION)
PIN 12 FACTORY USE (MAKE NO CONNECTION)
PIN 13 CLK A OUTPUT
PIN 14 CLK B OUTPUT

SMD

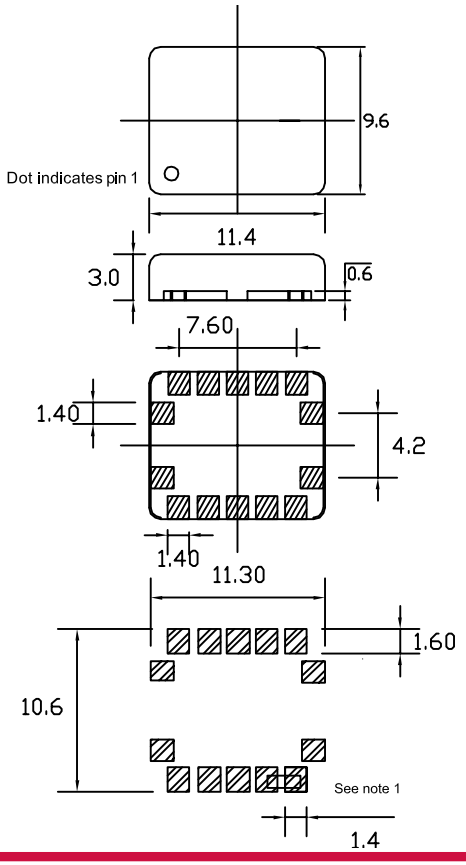

PIN FUNCTION
PIN 1 FACTORY USE (MAKE NO CONNECTION)
PIN 2 OE
PIN 3 VDD
PIN 4 CLK C OUTPUT
PIN 5 CONNECT TO PIN 6
PIN 6 CONNECT TO PIN 5
PIN 7 GND
PIN 8 FACTORY USE (MAKE NO CONNECTION)
PIN 9 CLK D OUTPUT
PIN10 CLK E OUTPUT
PIN 11 FACTORY USE (MAKE NO CONNECTION)
PIN 12 FACTORY USE (MAKE NO CONNECTION)
PIN 13 CLK A OUTPUT
PIN 14 CLK B OUTPUT

Dimensions in mm
Recommended solder pad layout

Note1:
For proper operation pin 5 must be connected to pin 6

Cardinal Components, Inc.
155 Route 46 West
Wayne, NJ 07470
Rev: M-090414-14

TEL: (973)785-1333
E-MAIL: sales@cardinalxtal.com
WEB: http://www.cardinalxtal.com

Factory Prog. 6 Output CMOS TCXO

- *Full Custom Multi-Frequency Programmable Osc*
- *Reduced EMI by turning off unused output*
- *Factory Programmable*
- *Industry-standard packaging saves on board space*
- *Mult. outputs 1 pkg vs. mult. osc & assoc. comp.*
- *Performs well under all conditions*
- *Increased Integration*

Applications

- *High-end multimedia*
- *Communications*
- *Industrial*
- *A/D converters*
- *Consumer Applications*
- *Low tolerance applications*
- *Low-power applications*

Series CCT6C

Pb RoHS COMPLIANT 2002 / 95 / EC

Part Numbering Example: CCT6C 1A 200.0 / 150.0 / 125.0 / 100.0 / 75.0 / 12.0

CCT6C	1A	200	150	125	100	75	12
SERIES	PACKAGE STYLE	FREQUENCY A	FREQUENCY B	FREQUENCY C	FREQUENCY D	FREQUENCY E	FREQUENCY R
	1A=14 pin dip 9=9.6x11.4 SMD	0.2 - 200 MHz	0.2 - 200 MHz	0.2 - 200 MHz	0.2 - 200 MHz	25 - 200 MHz	

Specifications:	Min	Typ	Max	Unit
Frequency Range:				
Output A CMOS	0.2		200	MHz
Output B CMOS	0.2		200	MHz
Output C CMOS	0.2		200	MHz
Output D CMOS	0.2		200	MHz
Output E CMOS	25		200	MHz
Output R Fixed		12		MHz
Available Stability Options:	-2.5		2.5	ppm
Supply Voltage:	3.135	3.3	3.465	V
Operating Temperature Range Options:	-40		85	°C
Storage Temperature:	-55		125	°C
Duty Cycle:	40 45		60 55	% %
Start-Up Time:		3	10	mS
Aging (PPM/1st Year): Ta=25C, Vdd=3.3V			±1	ppm
Static Discharge Voltage Mil-Std 883, method 3015	2000			V
Output Load:				
CMOS, < 40 MHz			30	pF
CMOS, ≥ 40 MHz			15	pF
Output Level:	CMOS			
Packaging:	25 / Tube Tape & Reel			14 pin SMD

Notes: Recommended .01 uF bypass capacitor from Vcc to GND. Capacitor should be as close to oscillator as possible.

Cardinal Components, Inc.
155 Route 46 West
Wayne, NJ 07470
Rev: M-090414-14

TEL: (973)785-1333
E-MAIL: sales@cardinalxtal.com
WEB: http://www.cardinalxtal.com

Factory Prog. 6 Output CMOS TCXO

Series **CCT6C**

Electrical Characteristics

	Description	Conditions	Min	Typ	Max	Unit
Ioh	Output High Current	Voh = (L)Vdd - 0.5, (L)Vdd = 3.3 V	12	24		mA
Iol	Output Low Current	Vol = .5, (L)Vdd = 3.3 V	12	24		mA
Vih	High Level Input Voltage	CMOS levels, % of Vdd	0.7			V
Vil	Low-Level Input Voltage	CMOS levels, % of Vdd			0.3	V
Iih	Input High Current	Vin = AVdd - 0.3 V		<1	10	µA
Iil	Input Low Current	Vin = + 0.3 V		<1	10	µA
Ioz	Output Leakage Current	tri-state outputs			10	µA
Idd	Total Power Supply Current	Example 1: 1 output@200 MHz; 1 output@66.666 MHz 1 output@100 MHz; 1 output@50 MHz 1 output@25 MHz; 1 output@12 MHz; Example 2: 1 output@200 Mhz; 1 output@155.52 MHz 1 output@100 Mhz; 1 output@77.76 MHz 1 output@50 Mhz; 1 output@12 MHz;		35 39		mA mA
Idds	Shutdown Power Supply Curr	Shutdown active		5	20	µA

Output Clock Switching Characteristics

	Description	Conditions	Min	Typ	Max	Unit
1/t1	Output Frequency	Clock output limit, CMOS, Commercial			200	MHz
t3	Rising Edge Slew Rate	Output clock rise time, 20% – 80% Vdd	0.75	1.4		nS
t4	Falling Edge Slew Rate	Output clock fall time, 20% – 80% Vdd	0.75	1.4		nS
t5	Output tri-state timing after SD/OE switches	Time for output to enter/leave tri-state mode		150	300	nS
t6	Clock Jitter measured at Vdd/2	Peak-to-Peak period jitter, CLK outputs		200		pS

ALL OUTPUTS, DUTY CYCLE, RISE/FALL TIME

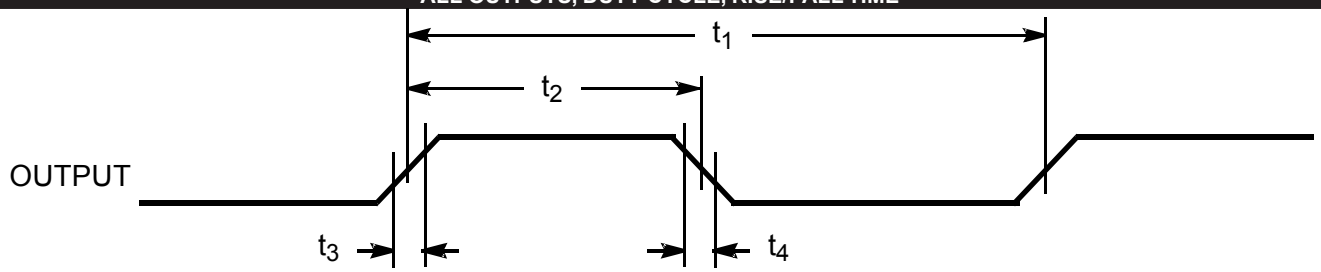

OUTPUT 3-STATE TIMING

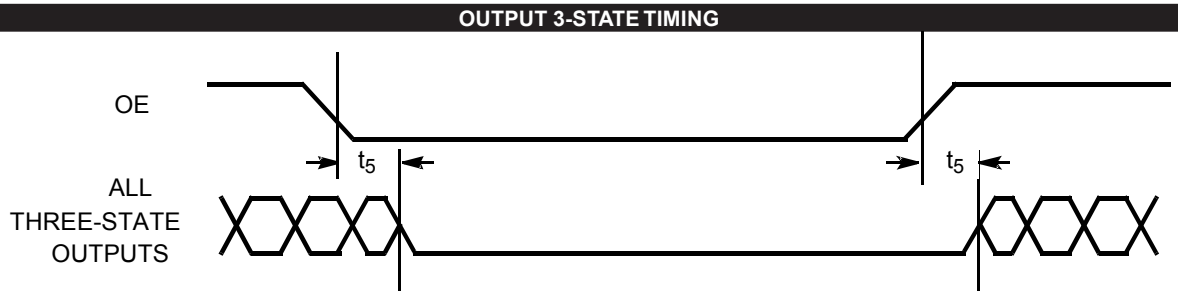

CLK OUTPUT JITTER

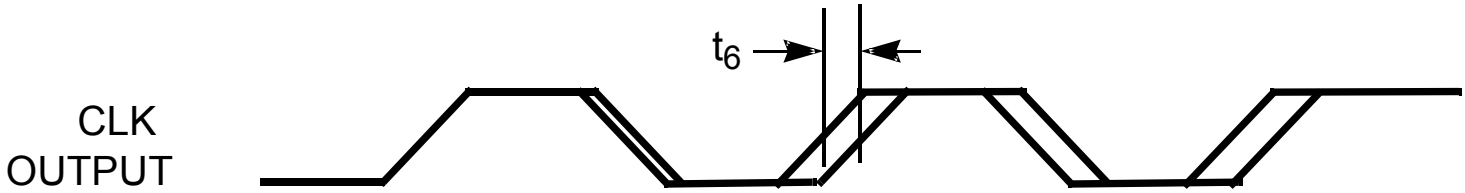

DIP

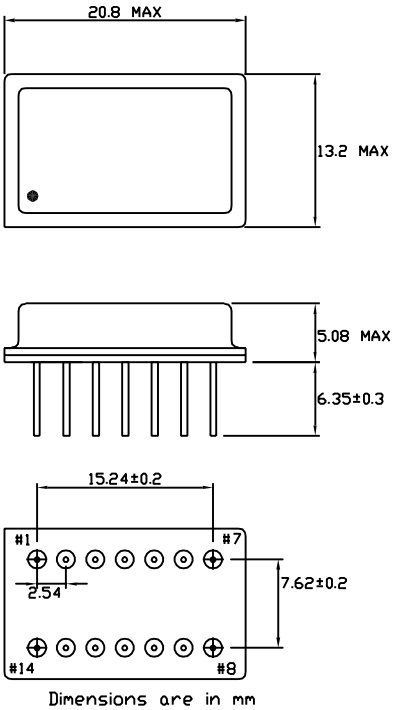

PIN FUNCTION
PIN 1 OE (CONNECT TO VDD)
PIN 2 SUSPEND (CONNECT TO GND)
PIN 3 VDD
PIN 4 CLK C OUTPUT
PIN 5 CONNECT TO PIN 6
PIN 6 CONNECT TO PIN 5
PIN 7 GND
PIN 8 12 MHz REF CLOCK OUTPUT
PIN 9 CLK D OUTPUT
PIN10 CLK E OUTPUT
PIN 11 FACTORY USE (MAKE NO CONNECTION)
PIN 12 FACTORY USE (MAKE NO CONNECTION)
PIN 13 CLK A OUTPUT
PIN 14 CLK B OUTPUT

SMD

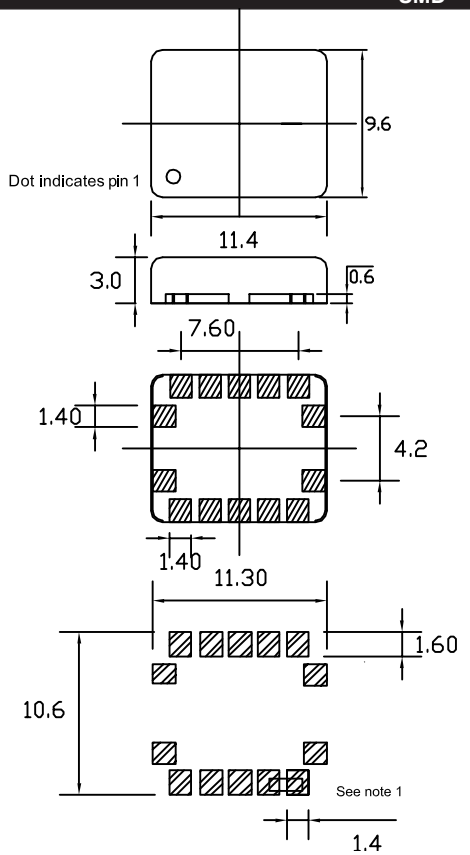

PIN FUNCTION
PIN 1 FACTORY USE (MAKE NO CONNECTION)
PIN 2 OE
PIN 3 VDD
PIN 4 CLK C OUTPUT
PIN 5 CONNECT TO PIN 6
PIN 6 CONNECT TO PIN 5
PIN 7 GND
PIN 8 12 MHz REF CLOCK OUTPUT
PIN 9 CLK D OUTPUT
PIN10 CLK E OUTPUT
PIN 11 FACTORY USE (MAKE NO CONNECTION)
PIN 12 FACTORY USE (MAKE NO CONNECTION)
PIN 13 CLK A OUTPUT
PIN 14 CLK B OUTPUT

Dimensions in mm
Recommended solder pad layout

Note1:
For proper operation pin 5 must be connected to pin 6

Cardinal Components, Inc.
155 Route 46 West
Wayne, NJ 07470
Rev: M-090414-14

TEL: (973)785-1333
E-MAIL: sales@cardinalxtal.com
WEB: http://www.cardinalxtal.com

Re-Configurable 4 Output CMOS Oscillator

- *Fixed & Re-Configurable Multi-Frequency Oscillator*
- *Intuitive software and I²C interface*
- *Easily update system*
- *Software flexible, quick upgrades and changes*
- *Industry-standard packaging saves on board space*
- *Mult. outputs 1 pkg vs. mult. osc & assoc. comp.*
- *Increased integration*

Applications

- *High-end multimedia*
- *Communications*
- *Industrial*
- *A/D converters*
- *Consumer Applications*

Series CCE4RC

Pb RoHS COMPLIANT 2002 / 95 / EC

Part Numbering Example: CCE4RC 1A 200.0 / 150.0 / 125.0 / 100.0

CCE4RC	1A	200	150	125	100
SERIES	PACKAGE STYLE	FREQUENCY A	FREQUENCY B	FREQUENCY C	FREQUENCY D
	1A=14 pin dip 9=9.6x11.4 SMD	0.2 - 200 MHz	0.2 - 200 MHz	0.2 - 200 MHz	0.2 - 200 MHz

Specifications:	Min	Typ	Max	Unit
Frequency Range:				
Output A CMOS	0.2		200	MHz
Output B CMOS	0.2		200	MHz
Output C CMOS	0.2		200	MHz
Output D CMOS	0.2		200	MHz
Available Stability Options:	-50		50	ppm
Supply Voltage:	3.135	3.3	3.465	V
Operating Temperature Range Options:	-40		85	°C
Storage Temperature:	-55		125	°C
Duty Cycle:	40 45		60 55	% %
Start-Up Time:		3	10	mS
Aging (PPM/1st Year): Ta=25C, Vdd=3.3V			±5	
Static Discharge Voltage Mil-Std 883, method 3015	2000			V
Output Load:				
CMOS, < 40 MHz			30	pF
CMOS, ≥ 40 MHz			15	pF
Output Level:	CMOS			
Packaging:	25 / Tube Tape & Reel			14 pin SMD

Notes: Recommended .01 µF bypass capacitor from Vcc to GND. Capacitor should be as close to oscillator as possible.

Cardinal Components, Inc.
155 Route 46 West
Wayne, NJ 07470
Rev: M-090414-14

TEL: (973)785-1333
E-MAIL: sales@cardinalxtal.com
WEB: http://www.cardinalxtal.com

Re-Configurable 4 Output CMOS Oscillator

Series CCE4RC

Electrical Characteristics

	Description	Conditions	Min	Typ	Max	Unit
Ioh	Output High Current	Voh = (L)Vdd - 0.5, (L)Vdd = 3.3 V	12	24		mA
Iol	Output Low Current	Vol = .5, (L)Vdd = 3.3 V	12	24		mA
Vih	High Level Input Voltage	CMOS levels, % of Vdd	0.7			V
Vil	Low-Level Input Voltage	CMOS levels, % of Vdd			0.3	V
Iih	Input High Current	Vin = AVdd - 0.3 V		<1	10	µA
Iil	Input Low Current	Vin = + 0.3 V		<1	10	µA
Ioz	Output Leakage Current	tri-state outputs			10	µA
Idd	Total Power Supply Current	Example 1: 1 output@19.44 MHz; 1 output@38.88 MHz 1 output@77.76 Mhz; 1 output@155.52 MHz Example 2: 1 output@50 MHz; 1 output@106.25 MHz 1 output@200 Mhz; 1 output@155.52 MHz		26 38		mA mA
Idds	Shutdown Power Supply Curr	Shutdown active		5	20	µA

Output Clock Switching Characteristics

	Description	Conditions	Min	Typ	Max	Unit
1/t1	Output Frequency	Clock output limit, CMOS, Commercial			200	MHz
t3	Rising Edge Slew Rate	Output clock rise time, 20% – 80% Vdd	0.75	1.4		nS
t4	Falling Edge Slew Rate	Output clock fall time, 20% – 80% Vdd	0.75	1.4		nS
t5	Output tri-state timing after SD/OE switches	Time for output to enter/leave tri-state mode		150	300	nS
t6	Clock Jitter measured at Vdd/2	Peak-to-Peak period jitter, CLK outputs		200		pS
	Frequency Switch Time	Change time		2	4	ms

ALL OUTPUTS, DUTY CYCLE, RISE/FALL TIME

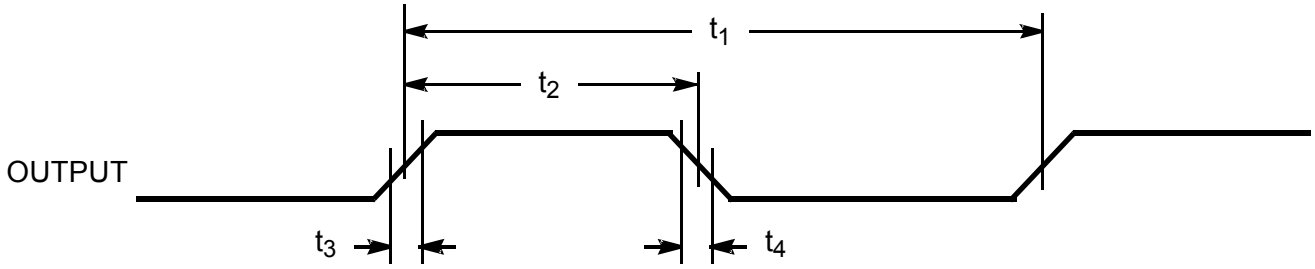

OUTPUT TRI-STATE TIMING

CLK OUTPUT JITTER

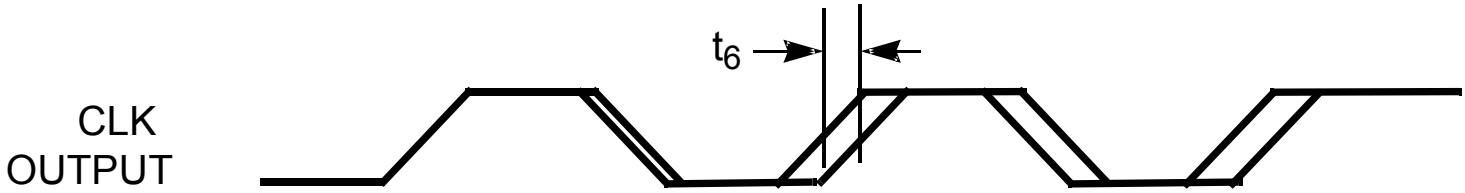

DIP

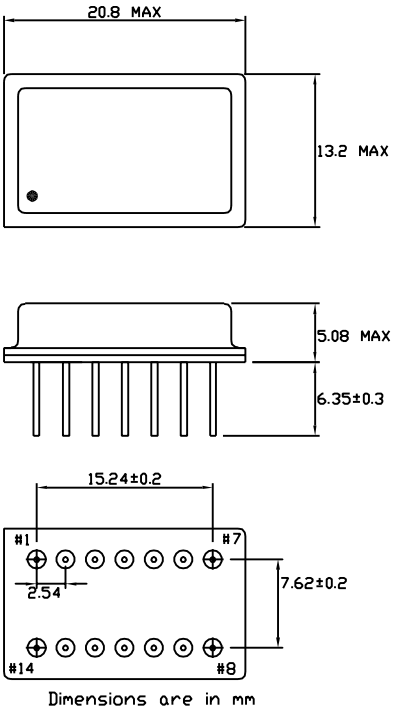

PIN FUNCTION
PIN 1 OE (CONNECT TO VDD)
PIN 2 SUSPEND (CONNECT TO GND)
PIN 3 VDD
PIN 4 CLK C OUTPUT
PIN 5 CONNECT TO PIN 6
PIN 6 CONNECT TO PIN 5
PIN 7 GND
PIN 8 FACTORY USE (MAKE NO CONNECTION)
PIN 9 CLK D OUTPUT
PIN10 FACTORY USE (MAKE NO CONNECTION)
PIN 11 SDAT
PIN 12 SCLK
PIN 13 CLK A OUTPUT
PIN 14 CLK B OUTPUT

SMD

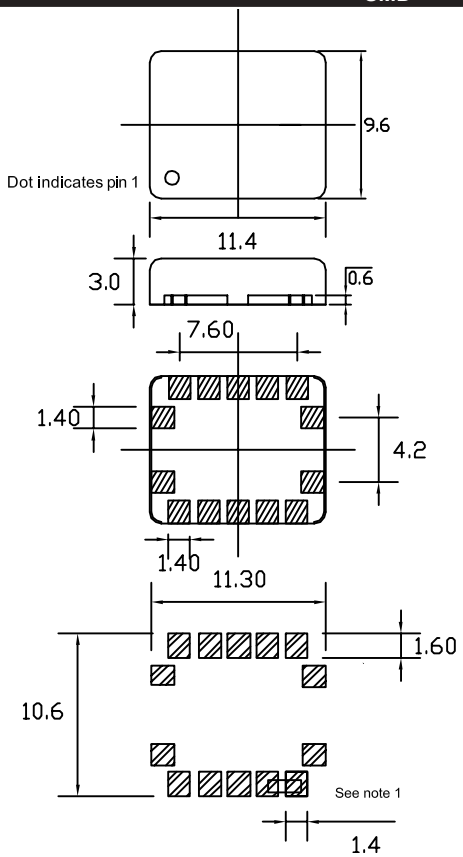

PIN FUNCTION
PIN 1 FACTORY USE (MAKE NO CONNECTION)
PIN 2 OE
PIN 3 VDD
PIN 4 CLK C OUTPUT
PIN 5 CONNECT TO PIN 6
PIN 6 CONNECT TO PIN 5
PIN 7 GND
PIN 8 FACTORY USE (MAKE NO CONNECTION)
PIN 9 CLK D OUTPUT
PIN10 FACTORY USE (MAKE NO CONNECTION)
PIN 11 SCLK
PIN 12 SDAT
PIN 13 CLK A OUTPUT
PIN 14 CLK B OUTPUT

Dimensions in mm
Recommended solder pad layout

Note1:
For proper operation pin 5 must be connected to pin 6

Cardinal Components, Inc.
155 Route 46 West
Wayne, NJ 07470
Rev: M-090414-14

TEL: (973)785-1333
E-MAIL: sales@cardinalxtal.com
WEB: http://www.cardinalxtal.com

Flash Programmability:

Non-Volatile programming enables easy customization, ultrafast turnaround, performance tweaking, design timing margin testing, inventory control, lower part count, and more secure product supply. In addition, any part in the family can also be programmed multiple times, which reduces programming errors and provides an easy upgrade path for existing designs.

Feature of the I^2C-bus:

- Only two bus lines are required; a serial data line (SDA) and a serial clock line (SCL)
- Each device connected to the bus is software addressable by a unique address and simple master/slave relationship exist at all times; master can operate as a master- transmitter or as master-receivers
- It's a true multi-master bus including collision detection and arbitration to prevent data corruption if two or more master simultaneously initiate data transfer
- Serial 8-bit oriented, bidirectional data transfers can be made at up to 100 Kbit/s in the standard mode, up to 400 kbit/s in the fast-mode, or up to 3.4 Mbit/s in the High-speed mode

Designer Benefits:

I^2C bus compatible In Circuit Reconfigurable Oscillator "ICRO" allow a system design to rapidly progress directly from a functional block diagram to a prototype. Moreover, since they 'clip' directly onto the I^2C bus without any additional external interfacing, they allow a prototype system to be modified or upgraded simply by 'clipping' or 'unclipping' ICRO to or from the bus.

Here are some of the feature of I^2C- bus compatible ICRO which are particularly attractive to designer

- Functional blocks on the block diagram correspond with the actual ICRO designs proceed rapidly from block diagram to final schematic
- No need to design bus interfaces because the I^2C-bus interface is already integrated on the ICRO
- Integrated addressing and data-transfer protocol allow systems to be completely software-defined
- The same ICRO types can often be used in many different applications
- Design-time reduces as designers quickly become familiar with the frequently used functional book represented by I^2C-bus compatible and ICRO
- ICRO can be added to or remove from system without affecting any other circuits on the bus

In addition to these advantages, the CMOS ICRO in the I^2C-bus compatible range offer designers special feature which are particularly attractive for portable equipment and battery-backed systems.

They All Have:

- Extremely low current consumption
- High Noise immunity
- Wide operating temperature range

Manufacturer Benefits

I^2C-bus compatible ICRO don't only assist designer, they also give a wider range of benefits to the equipment manufacturer because:

- The simple 2-wire serial I^2C bus minimizes interconnections so ICRO have fewer pins and there are not so many PCB tracks; result- smaller and less expensive PCBs
- The completely integrated I^2C-bus protocol eliminates the need for address decoders and other 'glue logic'
- The multi-master capability of the I^2C-bus allows rapid testing and alignment of end-user equipment via external connections to an assembly line
- I^2C-bus handbook, I^2C Website: www.semiconductors.philips.com/I2C

In-Circuit Re-Configurable Features

I^2C 2 Wire Interface

- Allows in-system programming into volatile configueration memory. All frequency setting can be changed providing literally millions of frequency options.
- This universal 2 wire bus, developed by Philips, is a defacto standared for controlling and monitoring applications in computing, communications and industrial segment
- I^2C is the only 2 wire bus where devices are addressed completely by software! This saves PC-board costs and design-in time.
- I^2C easily expandable support from many semiconductor companies Multi master capability e.g. for diagnostics Proven application in telecom market Proven in industrial enviornment used in Consumer applications.

Re-Configurable 5 Output CMOS Oscillator

Series CCE5RC

Applications

- *Fixed & Re-Configurable Multi-Frequency Oscillator*
- *Intuitive software and I²C interface*
- *Easily update system*
- *Software flexible, quick upgrades and changes*
- *Industry-standard packaging saves on board space*
- *Mult. outputs 1 pkg vs. mult. osc & assoc. comp.*
- *Increased integration*

- *High-end multimedia*
- *Communications*
- *Industrial*
- *A/D converters*
- *Consumer Applications*

Pb RoHS COMPLIANT 2002 / 95 / EC

Part Numbering Example: CCE5RC 1A 200.0 / 150.0 / 125.0 / 100.0 / 75.0

CCE5RC	1A	200	150	125	100	75
SERIES	PACKAGE STYLE	FREQUENCY A	FREQUENCY B	FREQUENCY C	FREQUENCY D	FREQUENCY E
	1A=14 pin dip 9=9.6x11.4 SMD	0.2 - 200 MHz	0.2 - 200 MHz	0.2 - 200 MHz	0.2 - 200 MHz	25 - 200 MHz

Specifications:	Min	Typ	Max	Unit
Frequency Range:				
Output A CMOS	0.2		200	MHz
Output B CMOS	0.2		200	MHz
Output C CMOS	0.2		200	MHz
Output D CMOS	0.2		200	MHz
Output E CMOS	25		200	MHz
Available Stability Options:	-50		50	ppm
Supply Voltage:	3.135	3.3	3.465	V
Operating Temperature Range Options:	-40		85	°C
Storage Temperature:	-55		125	°C
Duty Cycle:	40 45		60 55	% %
Start-Up Time:		3	10	mS
Aging (PPM/1st Year): Ta=25C, Vdd=3.3V			±5	
Static Discharge Voltage Mil-Std 883, method 3015	2000			V
Output Load:				
CMOS, < 40 MHz			30	pF
CMOS, ≥ 40 MHz			15	pF
Output Level:	CMOS			
Packaging:	25 / Tube Tape & Reel			14 pin SMD

Notes: Recommended .01 µF bypass capacitor from Vcc to GND. Capacitor should be as close to oscillator as possible.

Cardinal Components, Inc.
155 Route 46 West
Wayne, NJ 07470
Rev: M-090414-14

TEL: (973)785-1333
E-MAIL: sales@cardinalxtal.com
WEB: http://www.cardinalxtal.com

Re-Configurable 5 Output CMOS Oscillator

Series CCE5RC

Electrical Characteristics

	Description	Conditions	Min	Typ	Max	Unit
Ioh	Output High Current	Voh = (L)Vdd - 0.5, (L)Vdd = 3.3 V	12	24		mA
Iol	Output Low Current	Vol = .5, (L)Vdd = 3.3 V	12	24		mA
Vih	High Level Input Voltage	CMOS levels, % of Vdd	0.7			V
Vil	Low-Level Input Voltage	CMOS levels, % of Vdd			0.3	V
Iih	Input High Current	Vin = AVdd - 0.3 V		<1	10	µA
Iil	Input Low Current	Vin = + 0.3 V		<1	10	µA
Ioz	Output Leakage Current	tri-state outputs			10	µA
Idd	Total Power Supply Current	Example 1: 1 output@200 MHz; 1 output@66.666 MHz 1 output@100 MHz; 1 output@50 MHz 1 output@25 MHz Example 2: 1 output@200 Mhz; 1 output@155.52 MHz 1 output@100 Mhz; 1 output@77.76 MHz 1 output@50 Mhz		29 59		mA mA
Idds	Shutdown Power Supply Curr	Shutdown active		5	20	µA

Output Clock Switching Characteristics

	Description	Conditions	Min	Typ	Max	Unit
1/t1	Output Frequency	Clock output limit, CMOS, Commercial			200	MHz
t3	Rising Edge Slew Rate	Output clock rise time, 20% – 80% Vdd	0.75	1.4		nS
t4	Falling Edge Slew Rate	Output clock fall time, 20% – 80% Vdd	0.75	1.4		nS
t5	Output tri-state timing after SD/OE switches	Time for output to enter/leave tri-state mode		150	300	nS
t6	Clock Jitter measured at Vdd/2	Peak-to-Peak period jitter, CLK outputs		200		pS
	Frequency Switch Time	Change time		2	4	ms

ALL OUTPUTS, DUTY CYCLE, RISE/FALL TIME

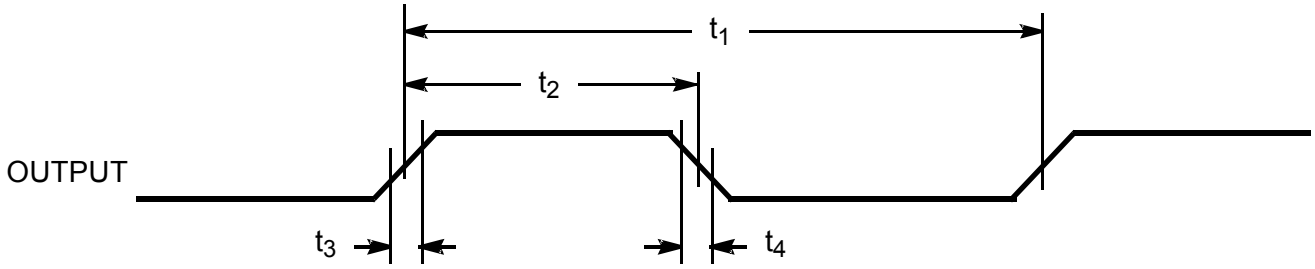

OUTPUT TRI-STATE TIMING

CLK OUTPUT JITTER

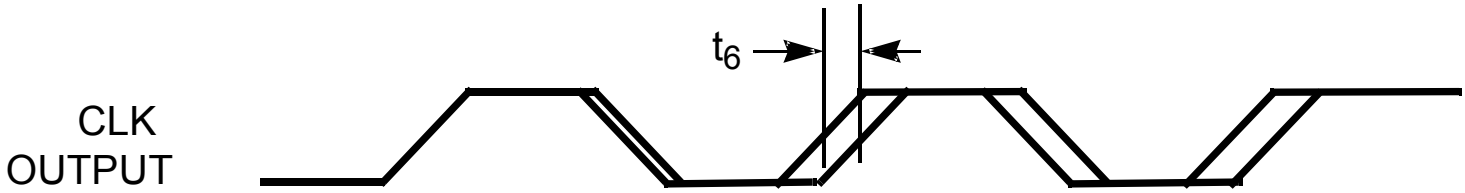

DIP

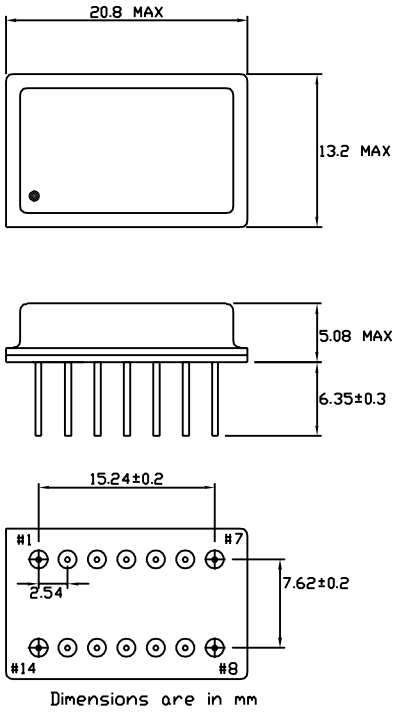

PIN FUNCTION
PIN 1 OE (CONNECT TO VDD)
PIN 2 SUSPEND (CONNECT TO GND)
PIN 3 VDD
PIN 4 CLK C OUTPUT
PIN 5 CONNECT TO PIN 6
PIN 6 CONNECT TO PIN 5
PIN 7 GND
PIN 8 FACTORY USE (MAKE NO CONNECTION)
PIN 9 CLK D OUTPUT
PIN10 CLK E OUTPUT
PIN 11 SDAT
PIN 12 SCLK
PIN 13 CLK A OUTPUT
PIN 14 CLK B OUTPUT

SMD

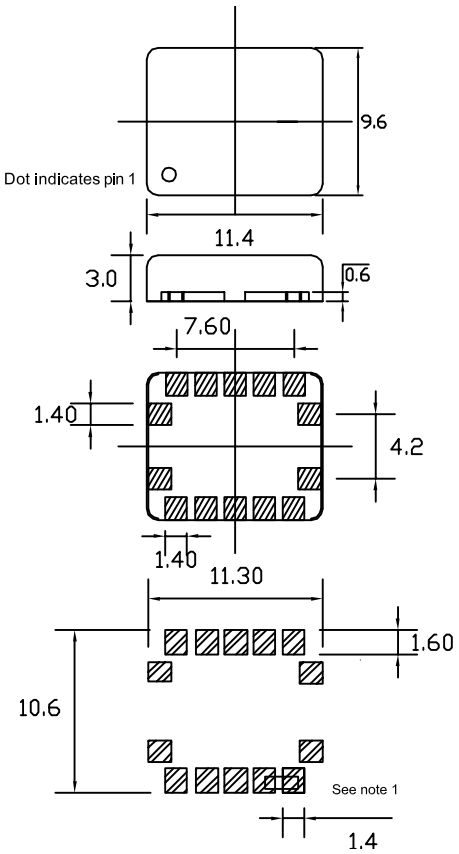

PIN FUNCTION
PIN 1 FACTORY USE (MAKE NO CONNECTION)
PIN 2 OE
PIN 3 VDD
PIN 4 CLK C OUTPUT
PIN 5 CONNECT TO PIN 6
PIN 6 CONNECT TO PIN 5
PIN 7 GND
PIN 8 FACTORY USE (MAKE NO CONNECTION)
PIN 9 CLK D OUTPUT
PIN10 CLK E OUTPUT
PIN 11 SCLK
PIN 12 SDAT
PIN 13 CLK A OUTPUT
PIN 14 CLK B OUTPUT

Dimensions in mm
Recommended solder pad layout

Note1:
For proper operation pin 5 must be connected to pin 6

Cardinal Components, Inc.
155 Route 46 West
Wayne, NJ 07470
Rev: M-090414-14

TEL: (973)785-1333
E-MAIL: sales@cardinalxtal.com
WEB: http://www.cardinalxtal.com

Flash Programmability:

Non-Volatile programming enables easy customization, ultrafast turnaround, performance tweaking, design timing margin testing, inventory control, lower part count, and more secure product supply. In addition, any part in the family can also be programmed multiple times, which reduces programming errors and provides an easy upgrade path for existing designs.

Feature of the I^2C-bus:

- Only two bus lines are required; a serial data line (SDA) and a serial clock line (SCL)
- Each device connected to the bus is software addressable by a unique address and simple master/slave relationship exist at all times; master can operate as a master- transmitter or as master-receivers
- It's a true multi-master bus including collision detection and arbitration to prevent data corruption if two or more master simultaneously initiate data transfer
- Serial 8-bit oriented, bidirectional data transfers can be made at up to 100 Kbit/s in the standard mode, up to 400 kbit/s in the fast-mode, or up to 3.4 Mbit/s in the High-speed mode

Designer Benefits:

I^2C bus compatible In Circuit Reconfigurable Oscillator "ICRO" allow a system design to rapidly progress directly from a functional block diagram to a prototype. Moreover, since they 'clip' directly onto the I^2C bus without any additional external interfacing, they allow a prototype system to be modified or upgraded simply by 'clipping' or 'unclipping' ICRO to or from the bus.

Here are some of the feature of I^2C- bus compatible ICRO which are particularly attractive to designer

- Functional blocks on the block diagram correspond with the actual ICRO designs proceed rapidly from block diagram to final schematic
- No need to design bus interfaces because the I^2C-bus interface is already integrated on the ICRO
- Integrated addressing and data-transfer protocol allow systems to be completely software-defined
- The same ICRO types can often be used in many different applications
- Design-time reduces as designers quickly become familiar with the frequently used functional book represented by I^2C-bus compatible and ICRO
- ICRO can be added to or remove from system without affecting any other circuits on the bus

In addition to these advantages, the CMOS ICRO in the I^2C-bus compatible range offer designers special feature which are particularly attractive for portable equipment and battery-backed systems.

They All Have:

- Extremely low current consumption
- High Noise immunity
- Wide operating temperature range

Manufacturer Benefits

I^2C-bus compatible ICRO don't only assist designer, they also give a wider range of benefits to the equipment manufacturer because:

- The simple 2-wire serial I^2C bus minimizes interconnections so ICRO have fewer pins and there are not so many PCB tracks; result- smaller and less expensive PCBs
- The completely integrated I^2C-bus protocol eliminates the need for address decoders and other 'glue logic'
- The multi-master capability of the I^2C-bus allows rapid testing and alignment of end-user equipment via external connections to an assembly line
- I^2C-bus handbook, I^2C Website: www.semiconductors.philips.com/I2C

Re-Configurable 6 Output CMOS Oscillator

Series CCE6RC

- *Fixed & Re-Configurable Multi-Frequency Oscillator*
- *Intuitive software and I²C interface*
- *Easily update system*
- *Software flexible, quick upgrades and changes*
- *Industry-standard packaging saves on board space*
- *Mult. outputs 1 pkg vs. mult. osc & assoc. comp.*
- *Increased integration*

Applications

- *High-end multimedia*
- *Communications*
- *Industrial*
- *A/D converters*
- *Consumer Applications*

Pb RoHS COMPLIANT 2002 / 95 / EC

Part Numbering Example: CCE6RC 1A 200.0 / 150.0 / 125.0 / 100.0 / 75.0 / 12.0

CCE6RC	1A	200	150	125	100	75	12
SERIES	PACKAGE STYLE	FREQUENCY A	FREQUENCY B	FREQUENCY C	FREQUENCY D	FREQUENCY E	FREQUENCY R
	1A=14 pin dip 9=9.6x11.4 SMD	0.2 - 200 MHz	0.2 - 200 MHz	0.2 - 200 MHz	0.2 - 200 MHz	25 - 200 MHz	

Specifications:	Min	Typ	Max	Unit
Frequency Range:				
Output A CMOS	0.2		200	MHz
Output B CMOS	0.2		200	MHz
Output C CMOS	0.2		200	MHz
Output D CMOS	0.2		200	MHz
Output E CMOS	25		200	MHz
Output R Fixed		12		MHz
Available Stability Options:	-50		50	ppm
Supply Voltage:	3.135	3.3	3.465	V
Operating Temperature Range Options:	-40		85	°C
Storage Temperature:	-55		125	°C
Duty Cycle:	40 45		60 55	% %
Start-Up Time:		3	10	mS
Aging (PPM/1st Year): Ta=25C, Vdd=3.3V			±5	
Static Discharge Voltage Mil-Std 883, method 3015	2000			V
Output Load:				
CMOS, < 40 MHz			30	pF
CMOS, ≥ 40 MHz			15	pF
Output Level:	CMOS			
Packaging:	25 / Tube Tape & Reel			14 pin SMD

Notes: Recommended .01 µF bypass capacitor from Vcc to GND. Capacitor should be as close to oscillator as possible.

Cardinal Components, Inc.
155 Route 46 West
Wayne, NJ 07470
Rev: M-090414-14

TEL: (973)785-1333
E-MAIL: sales@cardinalxtal.com
WEB: http://www.cardinalxtal.com

Re-Configurable 6 Output CMOS Oscillator

Series CCE6RC

Electrical Characteristics

	Description	Conditions	Min	Typ	Max	Unit
Ioh	Output High Current	Voh = (L)Vdd - 0.5, (L)Vdd = 3.3 V	12	24		mA
Iol	Output Low Current	Vol = .5, (L)Vdd = 3.3 V	12	24		mA
Vih	High Level Input Voltage	CMOS levels, % of Vdd	0.7			V
Vil	Low-Level Input Voltage	CMOS levels, % of Vdd			0.3	V
Iih	Input High Current	Vin = AVdd - 0.3 V		<1	10	µA
Iil	Input Low Current	Vin = + 0.3 V		<1	10	µA
Ioz	Output Leakage Current	tri-state outputs			10	µA
Idd	Total Power Supply Current	Example 1: 1 output@200 MHz; 1 output@66.666 MHz 1 output@100 MHz; 1 output@50 MHz 1 output@25 MHz; 1 output@12 MHz; Example 2: 1 output@200 Mhz; 1 output@155.52 MHz 1 output@100 Mhz; 1 output@77.76 MHz 1 output@50 Mhz; 1 output@12 MHz;		35 39		mA mA
Idds	Shutdown Power Supply Curr	Shutdown active		5	20	µA

Output Clock Switching Characteristics

	Description	Conditions	Min	Typ	Max	Unit
1/t1	Output Frequency	Clock output limit, CMOS, Commercial			200	MHz
t3	Rising Edge Slew Rate	Output clock rise time, 20% – 80% Vdd	0.75	1.4		nS
t4	Falling Edge Slew Rate	Output clock fall time, 20% – 80% Vdd	0.75	1.4		nS
t5	Output tri-state timing after SD/OE switches	Time for output to enter/leave tri-state mode		150	300	nS
t6	Clock Jitter measured at Vdd/2	Peak-to-Peak period jitter, CLK outputs		200		pS
	Frequency Switch Time	Change time		2	4	ms

ALL OUTPUTS, DUTY CYCLE, RISE/FALL TIME

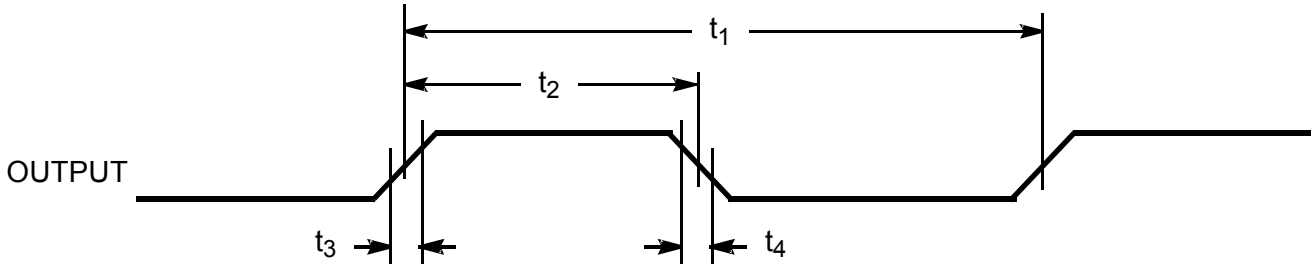

OUTPUT TRI-STATE TIMING

CLK OUTPUT JITTER

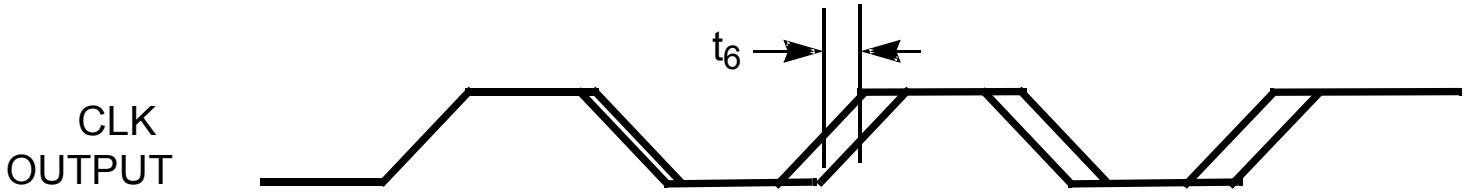

DIP

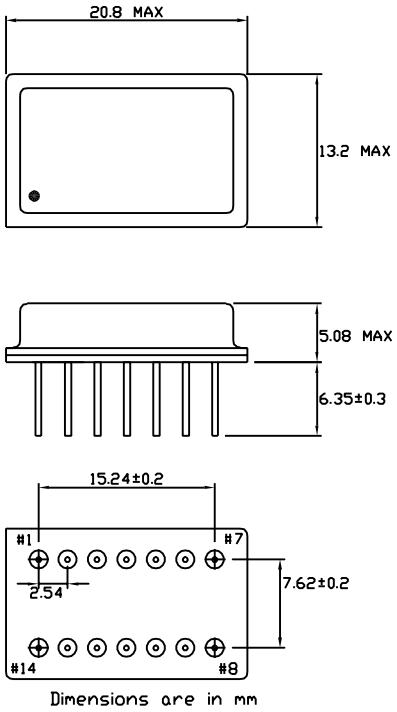

PIN FUNCTION
PIN 1 OE (CONNECT TO VDD)
PIN 2 SUSPEND (CONNECT TO GND)
PIN 3 VDD
PIN 4 CLK C OUTPUT
PIN 5 CONNECT TO PIN 6
PIN 6 CONNECT TO PIN 5
PIN 7 GND
PIN 8 12 MHz REF CLOCK OUTPUT
PIN 9 CLK D OUTPUT
PIN10 CLK E OUTPUT
PIN 11 SDAT
PIN 12 SCLK
PIN 13 CLK A OUTPUT
PIN 14 CLK B OUTPUT

SMD

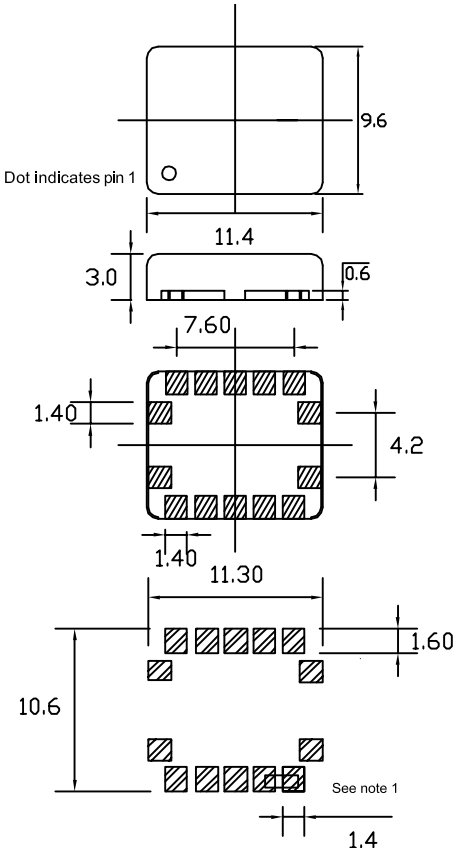

PIN FUNCTION
PIN 1 FACTORY USE (MAKE NO CONNECTION)
PIN 2 OE
PIN 3 VDD
PIN 4 CLK C OUTPUT
PIN 5 CONNECT TO PIN 6
PIN 6 CONNECT TO PIN 5
PIN 7 GND
PIN 8 12 MHz REF CLOCK OUTPUT
PIN 9 CLK D OUTPUT
PIN10 CLK E OUTPUT
PIN 11 SCLK
PIN 12 SDAT
PIN 13 CLK A OUTPUT
PIN 14 CLK B OUTPUT

Dimensions in mm
Recommended solder pad layout

Note1:
For proper operation pin 5 must be connected to pin 6

Cardinal Components, Inc.
155 Route 46 West
Wayne, NJ 07470
Rev: M-090414-14

TEL: (973)785-1333
E-MAIL: sales@cardinalxtal.com
WEB: http://www.cardinalxtal.com

Flash Programmability:

Non-Volatile programming enables easy customization, ultrafast turnaround, performance tweaking, design timing margin testing, inventory control, lower part count, and more secure product supply. In addition, any part in the family can also be programmed multiple times, which reduces programming errors and provides an easy upgrade path for existing designs.

Feature of the I^2C-bus:

- Only two bus lines are required; a serial data line (SDA) and a serial clock line (SCL)
- Each device connected to the bus is software addressable by a unique address and simple master/slave relationship exist at all times; master can operate as a master- transmitter or as master-receivers
- It's a true multi-master bus including collision detection and arbitration to prevent data corruption if two or more master simultaneously initiate data transfer
- Serial 8-bit oriented, bidirectional data transfers can be made at up to 100 Kbit/s in the standard mode, up to 400 kbit/s in the fast-mode, or up to 3.4 Mbit/s in the High-speed mode

Designer Benefits:

I^2C bus compatible In Circuit Reconfigurable Oscillator "ICRO" allow a system design to rapidly progress directly from a functional block diagram to a prototype. Moreover, since they 'clip' directly onto the I^2C bus without any additional external interfacing, they allow a prototype system to be modified or upgraded simply by 'clipping' or 'unclipping' ICRO to or from the bus.

Here are some of the feature of I^2C- bus compatible ICRO which are particularly attractive to designer

- Functional blocks on the block diagram correspond with the actual ICRO designs proceed rapidly from block diagram to final schematic
- No need to design bus interfaces because the I^2C-bus interface is already integrated on the ICRO
- Integrated addressing and data-transfer protocol allow systems to be completely software-defined
- The same ICRO types can often be used in many different applications
- Design-time reduces as designers quickly become familiar with the frequently used functional book represented by I^2C-bus compatible and ICRO
- ICRO can be added to or remove from system without affecting any other circuits on the bus

In addition to these advantages, the CMOS ICRO in the I^2C-bus compatible range offer designers special feature which are particularly attractive for portable equipment and battery-backed systems.

They All Have:

- Extremely low current consumption
- High Noise immunity
- Wide operating temperature range

Manufacturer Benefits

I^2C-bus compatible ICRO don't only assist designer, they also give a wider range of benefits to the equipment manufacturer because:

- The simple 2-wire serial I^2C bus minimizes interconnections so ICRO have fewer pins and there are not so many PCB tracks; result- smaller and less expensive PCBs
- The completely integrated I^2C-bus protocol eliminates the need for address decoders and other 'glue logic'
- The multi-master capability of the I^2C-bus allows rapid testing and alignment of end-user equipment via external connections to an assembly line
- I^2C-bus handbook, I^2C Website: www.semiconductors.philips.com/I2C

Re-Configurable 4 Output CMOS TCXO

- *Fixed & Re-Configurable Multi-Frequency Oscillator*
- *Intuitive software and I²C interface*
- *Easily update system*
- *Software flexible, quick upgrades and changes*
- *Industry-standard packaging saves on board space*
- *Mult. outputs 1 pkg vs. mult. osc & assoc. comp.*
- *Performs well under all conditions*

Applications

- *High-end multimedia*
- *Communications*
- *Industrial*
- *A/D converters*
- *Consumer Applications*
- *New and innovative products*
- *Temperature-sensitive applications*

Series **CCT4RC**

Pb RoHS COMPLIANT 2002 / 95 / EC

Part Numbering Example: CCT4RC 1A 200.0 / 150.0 / 125.0 / 100.0

CCT4RC	1A	200	150	125	100
SERIES	PACKAGE STYLE	FREQUENCY A	FREQUENCY B	FREQUENCY C	FREQUENCY D
	1A=14 pin dip 9=9.6x11.4 SMD	0.2 - 200 MHz	0.2 - 200 MHz	0.2 - 200 MHz	0.2 - 200 MHz

Specifications:	Min	Typ	Max	Unit
Frequency Range: Output A CMOS Output B CMOS Output C CMOS Output D CMOS	 0.2 0.2 0.2 0.2		 200 200 200 200	 MHz MHz MHz MHz
Available Stability Options:	-2.5		2.5	ppm
Supply Voltage:	3.135	3.3	3.465	V
Operating Temperature Range Options:	-40		85	°C
Storage Temperature:	-55		125	°C
Duty Cycle:	40 45		60 55	% %
Start-Up Time:		3	10	mS
Aging (PPM/1st Year): Ta=25C, Vdd=3.3V			±1	ppm
Static Discharge Voltage Mil-Std 883, method 3015	2000			V
Output Load: CMOS, < 40 MHz CMOS, ≥ 40 MHz			 30 15	 pF pF
Output Level:	CMOS			
Packaging:	25 / Tube Tape & Reel			14 pin SMD

Notes: Recommended .01 µF bypass capacitor from Vcc to GND. Capacitor should be as close to oscillator as possible.

Cardinal Components, Inc.
155 Route 46 West
Wayne, NJ 07470
Rev: M-090414-14

TEL: (973)785-1333
E-MAIL: sales@cardinalxtal.com
WEB: http://www.cardinalxtal.com

Re-Configurable 4 Output CMOS TCXO

Series CCT4RC

Electrical Characteristics

	Description	Conditions	Min	Typ	Max	Unit
Ioh	Output High Current	Voh = (L)Vdd - 0.5, (L)Vdd = 3.3 V	12	24		mA
Iol	Output Low Current	Vol = .5, (L)Vdd = 3.3 V	12	24		mA
Vih	High Level Input Voltage	CMOS levels, % of Vdd	0.7			V
Vil	Low-Level Input Voltage	CMOS levels, % of Vdd			0.3	V
Iih	Input High Current	Vin = AVdd - 0.3 V		<1	10	µA
Iil	Input Low Current	Vin = + 0.3 V		<1	10	µA
Ioz	Output Leakage Current	tri-state outputs			10	µA
Idd	Total Power Supply Current	1 output@19.44 MHz; 1 output@77.76 MHz 1 output@155.52 Mhz; 1 output@200 MHz		15 26		mA
Idds	Shutdown Power Supply Curr	Shutdown active		5	20	µA

Output Clock Switching Characteristics

	Description	Conditions	Min	Typ	Max	Unit
1/t1	Output Frequency	Clock output limit, CMOS, Commercial			200	MHz
t3	Rising Edge Slew Rate	Output clock rise time, 20% – 80% Vdd	0.75	1.4		nS
t4	Falling Edge Slew Rate	Output clock fall time, 20% – 80% Vdd	0.75	1.4		nS
t5	Output tri-state timing after SD/OE switches	Time for output to enter/leave tri-state mode		150	300	nS
t6	Clock Jitter measured at Vdd/2	Peak-to-Peak period jitter, CLK outputs		200		pS
	Frequency Switch Time	Change time		2	4	ms

Cardinal Components, Inc.
155 Route 46 West
Wayne, NJ 07470
Rev: M-090414-14

TEL: (973)785-1333
E-MAIL: sales@cardinalxtal.com
WEB: http://www.cardinalxtal.com

ALL OUTPUTS, DUTY CYCLE, RISE/FALL TIME

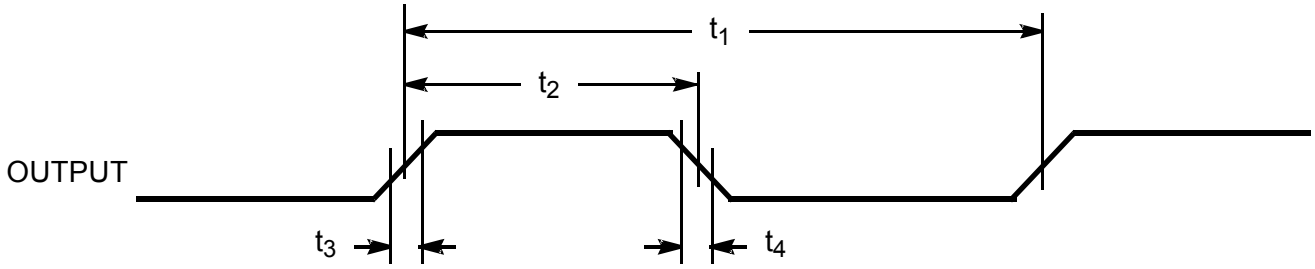

OUTPUT TRI-STATE TIMING

CLK OUTPUT JITTER

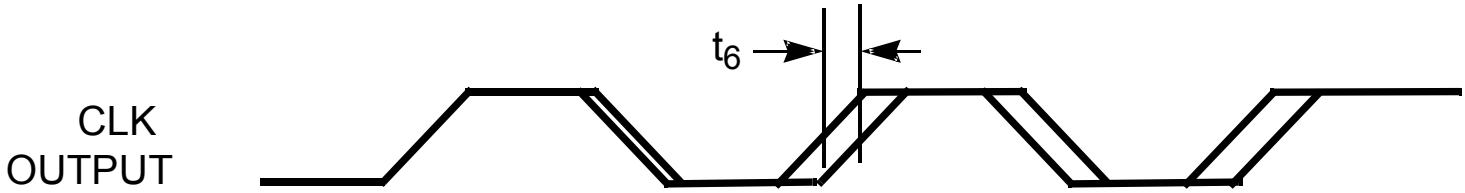

DIP

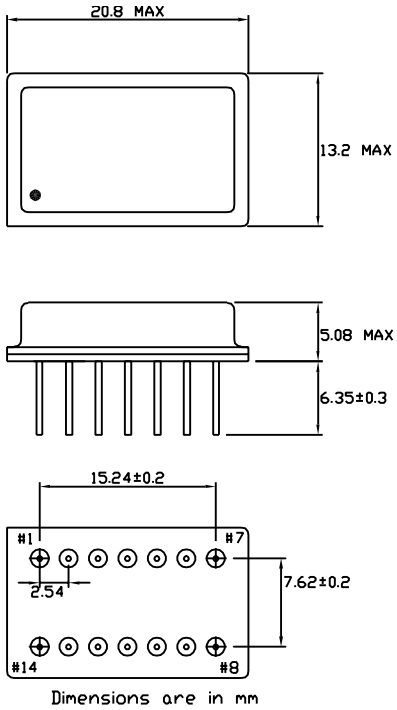

PIN FUNCTION
PIN 1 OE (CONNECT TO VDD)
PIN 2 SUSPEND (CONNECT TO GND)
PIN 3 VDD
PIN 4 CLK C OUTPUT
PIN 5 CONNECT TO PIN 6
PIN 6 CONNECT TO PIN 5
PIN 7 GND
PIN 8 FACTORY USE (MAKE NO CONNECTION)
PIN 9 CLK D OUTPUT
PIN10 FACTORY USE (MAKE NO CONNECTION)
PIN 11 SDAT
PIN 12 SCLK
PIN 13 CLK A OUTPUT
PIN 14 CLK B OUTPUT

SMD

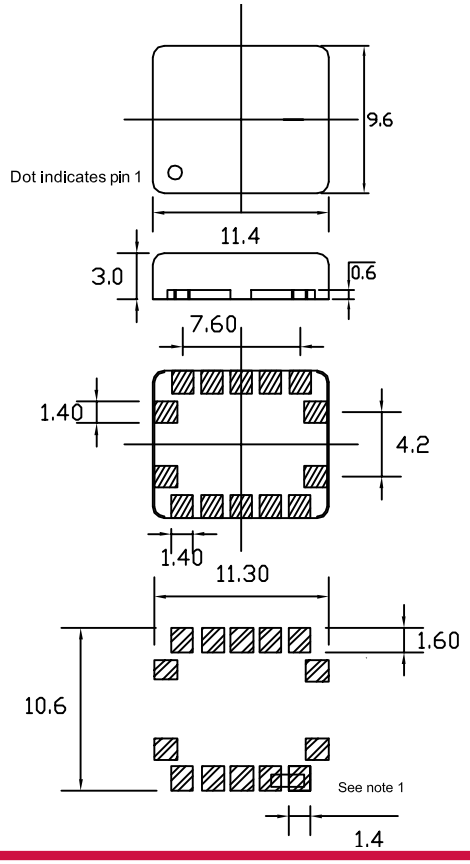

PIN FUNCTION
PIN 1 FACTORY USE (MAKE NO CONNECTION)
PIN 2 OE
PIN 3 VDD
PIN 4 CLK C OUTPUT
PIN 5 CONNECT TO PIN 6
PIN 6 CONNECT TO PIN 5
PIN 7 GND
PIN 8 FACTORY USE (MAKE NO CONNECTION)
PIN 9 CLK D OUTPUT
PIN10 FACTORY USE (MAKE NO CONNECTION)
PIN 11 SCLK
PIN 12 SDAT
PIN 13 CLK A OUTPUT
PIN 14 CLK B OUTPUT

Dimensions in mm
Recommended solder pad layout

Note1:
For proper operation pin 5 must be connected to pin 6

Cardinal Components, Inc.
155 Route 46 West
Wayne, NJ 07470
Rev: M-090414-14

TEL: (973)785-1333
E-MAIL: sales@cardinalxtal.com
WEB: http://www.cardinalxtal.com

Flash Programmability:

Non-Volatile programming enables easy customization, ultrafast turnaround, performance tweaking, design timing margin testing, inventory control, lower part count, and more secure product supply. In addition, any part in the family can also be programmed multiple times, which reduces programming errors and provides an easy upgrade path for existing designs.

Feature of the I^2C-bus:

- Only two bus lines are required; a serial data line (SDA) and a serial clock line (SCL)
- Each device connected to the bus is software addressable by a unique address and simple master/slave relationship exist at all times; master can operate as a master- transmitter or as master-receivers
- It's a true multi-master bus including collision detection and arbitration to prevent data corruption if two or more master simultaneously initiate data transfer
- Serial 8-bit oriented, bidirectional data transfers can be made at up to 100 Kbit/s in the standard mode, up to 400 kbit/s in the fast-mode, or up to 3.4 Mbit/s in the High-speed mode

Designer Benefits:

I^2C bus compatible In Circuit Reconfigurable Oscillator "ICRO" allow a system design to rapidly progress directly from a functional block diagram to a prototype. Moreover, since they 'clip' directly onto the I^2C bus without any additional external interfacing, they allow a prototype system to be modified or upgraded simply by 'clipping' or 'unclipping' ICRO to or from the bus.

Here are some of the feature of I^2C- bus compatible ICRO which are particularly attractive to designer

- Functional blocks on the block diagram correspond with the actual ICRO designs proceed rapidly from block diagram to final schematic
- No need to design bus interfaces because the I^2C-bus interface is already integrated on the ICRO
- Integrated addressing and data-transfer protocol allow systems to be completely software-defined
- The same ICRO types can often be used in many different applications
- Design-time reduces as designers quickly become familiar with the frequently used functional book represented by I^2C-bus compatible and ICRO
- ICRO can be added to or remove from system without affecting any other circuits on the bus

In addition to these advantages, the CMOS ICRO in the I^2C-bus compatible range offer designers special feature which are particularly attractive for portable equipment and battery-backed systems.

They All Have:

- Extremely low current consumption
- High Noise immunity
- Wide operating temperature range

Manufacturer Benefits

I^2C-bus compatible ICRO don't only assist designer, they also give a wider range of benefits to the equipment manufacturer because:

- The simple 2-wire serial I^2C bus minimizes interconnections so ICRO have fewer pins and there are not so many PCB tracks; result- smaller and less expensive PCBs
- The completely integrated I^2C-bus protocol eliminates the need for address decoders and other 'glue logic'
- The multi-master capability of the I^2C-bus allows rapid testing and alignment of end-user equipment via external connections to an assembly line
- I^2C-bus handbook, I^2C Website: www.semiconductors.philips.com/I2C

Re-Configurable 5 Output CMOS TCXO

- *Fixed & Re-Configurable Multi-Frequency Oscillator*
- *Intuitive software and I²C interface*
- *Easily update system*
- *Software flexible, quick upgrades and changes*
- *Industry-standard packaging saves on board space*
- *Mult. outputs 1 pkg vs. mult. osc & assoc. comp.*
- *Performs well under all conditions*

Applications

- *High-end multimedia*
- *Communications*
- *Industrial*
- *A/D converters*
- *Consumer Applications*
- *New and innovative products*
- *Temperature-sensitive applications*

Series CCT5RC

Pb RoHS COMPLIANT 2002 / 95 / EC

Part Numbering Example: CCT5RC 1A 200.0 / 150.0 / 125.0 / 100.0 / 75.0

CCT5RC	1A	200	150	125	100	75
SERIES	PACKAGE STYLE	FREQUENCY A	FREQUENCY B	FREQUENCY C	FREQUENCY D	FREQUENCY E
	1A=14 pin dip 9=9.6x11.4 SMD	0.2 - 200 MHz	0.2 - 200 MHz	0.2 - 200 MHz	0.2 - 200 MHz	25 - 200 MHz

Specifications:	Min	Typ	Max	Unit
Frequency Range:				
Output A CMOS	0.2		200	MHz
Output B CMOS	0.2		200	MHz
Output C CMOS	0.2		200	MHz
Output D CMOS	0.2		200	MHz
Output E CMOS	25		200	MHz
Available Stability Options:	-2.5		2.5	ppm
Supply Voltage:	3.135	3.3	3.465	V
Operating Temperature Range Options:	-40		85	°C
Storage Temperature:	-55		125	°C
Duty Cycle:	40 45		60 55	% %
Start-Up Time:		3	10	mS
Aging (PPM/1st Year): Ta=25C, Vdd=3.3V			±1	
Static Discharge Voltage Mil-Std 883, method 3015	2000			V
Output Load:				
CMOS, < 40 MHz			30	pF
CMOS, ≥ 40 MHz			15	pF
Output Level:	CMOS			
Packaging:	25 / Tube Tape & Reel			14 pin SMD

Notes: Recommended .01 µF bypass capacitor from Vcc to GND. Capacitor should be as close to oscillator as possible.

Cardinal Components, Inc.
155 Route 46 West
Wayne, NJ 07470
Rev: M-090414-14

TEL: (973)785-1333
E-MAIL: sales@cardinalxtal.com
WEB: http://www.cardinalxtal.com

Re-Configurable 5 Output CMOS TCXO

Series CCT5RC

Electrical Characteristics

	Description	Conditions	Min	Typ	Max	Unit
Ioh	Output High Current	Voh = (L)Vdd - 0.5, (L)Vdd = 3.3 V	12	24		mA
Iol	Output Low Current	Vol = .5, (L)Vdd = 3.3 V	12	24		mA
Vih	High Level Input Voltage	CMOS levels, % of Vdd	0.7			V
Vil	Low-Level Input Voltage	CMOS levels, % of Vdd			0.3	V
Iih	Input High Current	Vin = AVdd - 0.3 V		<1	10	µA
Iil	Input Low Current	Vin = + 0.3 V		<1	10	µA
Ioz	Output Leakage Current	tri-state outputs			10	µA
Idd	Total Power Supply Current	Example 1: 1 output@200 MHz; 1 output@66.666 MHz 1 output@100 MHz; 1 output@50 MHz 1 output@25 MHz Example 2: 1 output@200 Mhz; 1 output@155.52 MHz 1 output@100 Mhz; 1 output@77.76 MHz 1 output@50 Mhz		35 39		mA mA
Idds	Shutdown Power Supply Curr	Shutdown active		5	20	µA

Output Clock Switching Characteristics

	Description	Conditions	Min	Typ	Max	Unit
1/t1	Output Frequency	Clock output limit, CMOS, Commercial			200	MHz
t3	Rising Edge Slew Rate	Output clock rise time, 20% – 80% Vdd	0.75	1.4		nS
t4	Falling Edge Slew Rate	Output clock fall time, 20% – 80% Vdd	0.75	1.4		nS
t5	Output tri-state timing after SD/OE switches	Time for output to enter/leave tri-state mode		150	300	nS
t6	Clock Jitter measured at Vdd/2	Peak-to-Peak period jitter, CLK outputs		200		pS
	Frequency Switch Time	Change time		2	4	ms

ALL OUTPUTS, DUTY CYCLE, RISE/FALL TIME

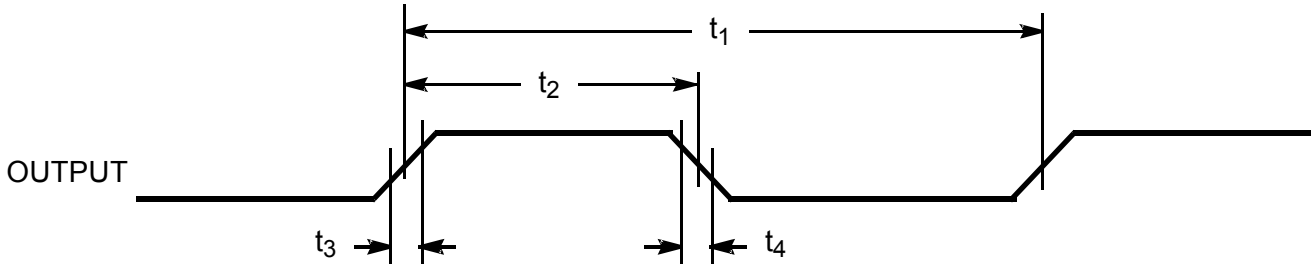

OUTPUT TRI-STATE TIMING

CLK OUTPUT JITTER

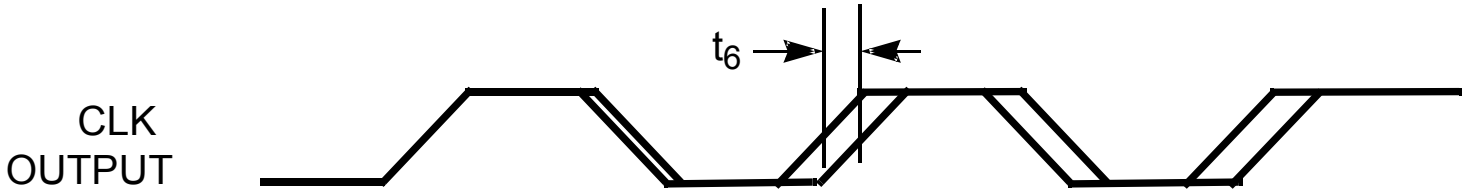

DIP

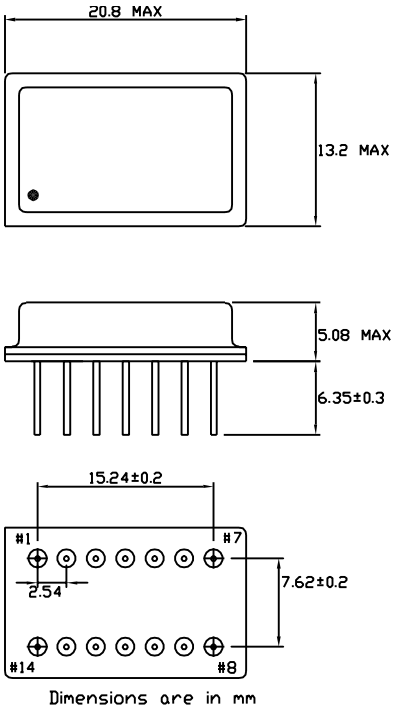

PIN FUNCTION
PIN 1 OE (CONNECT TO VDD)
PIN 2 SUSPEND (CONNECT TO GND)
PIN 3 VDD
PIN 4 CLK C OUTPUT
PIN 5 CONNECT TO PIN 6
PIN 6 CONNECT TO PIN 5
PIN 7 GND
PIN 8 FACTORY USE (MAKE NO CONNECTION)
PIN 9 CLK D OUTPUT
PIN10 CLK E OUTPUT
PIN 11 SDAT
PIN 12 SCLK
PIN 13 CLK A OUTPUT
PIN 14 CLK B OUTPUT

SMD

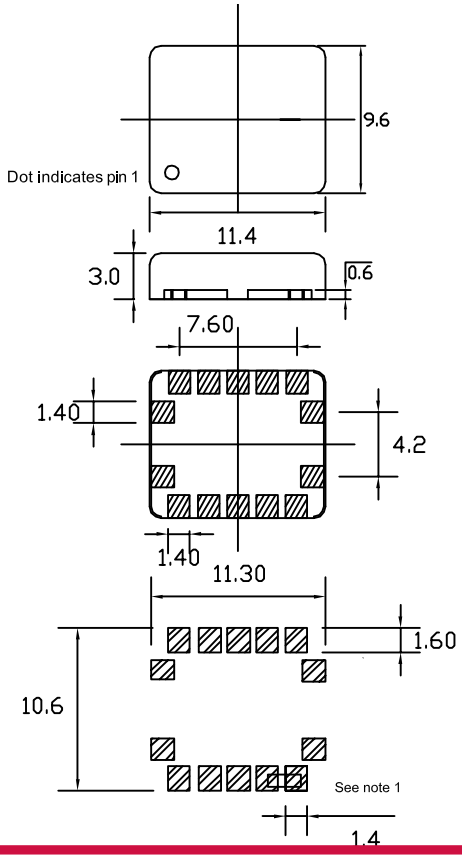

PIN FUNCTION
PIN 1 FACTORY USE (MAKE NO CONNECTION)
PIN 2 OE
PIN 3 VDD
PIN 4 CLK C OUTPUT
PIN 5 CONNECT TO PIN 6
PIN 6 CONNECT TO PIN 5
PIN 7 GND
PIN 8 FACTORY USE (MAKE NO CONNECTION)
PIN 9 CLK D OUTPUT
PIN10 CLK E OUTPUT
PIN 11 SCLK
PIN 12 SDAT
PIN 13 CLK A OUTPUT
PIN 14 CLK B OUTPUT

Dimensions in mm
Recommended solder pad layout

Note1:
For proper operation pin 5 must be connected to pin 6

Cardinal Components, Inc.
155 Route 46 West
Wayne, NJ 07470
Rev: M-090414-14

TEL: (973)785-1333
E-MAIL: sales@cardinalxtal.com
WEB: http://www.cardinalxtal.com

Flash Programmability:

Non-Volatile programming enables easy customization, ultrafast turnaround, performance tweaking, design timing margin testing, inventory control, lower part count, and more secure product supply. In addition, any part in the family can also be programmed multiple times, which reduces programming errors and provides an easy upgrade path for existing designs.

Feature of the I^2C-bus:

- Only two bus lines are required; a serial data line (SDA) and a serial clock line (SCL)
- Each device connected to the bus is software addressable by a unique address and simple master/slave relationship exist at all times; master can operate as a master- transmitter or as master-receivers
- It's a true multi-master bus including collision detection and arbitration to prevent data corruption if two or more master simultaneously initiate data transfer
- Serial 8-bit oriented, bidirectional data transfers can be made at up to 100 Kbit/s in the standard mode, up to 400 kbit/s in the fast-mode, or up to 3.4 Mbit/s in the High-speed mode

Designer Benefits:

I^2C bus compatible In Circuit Reconfigurable Oscillator "ICRO" allow a system design to rapidly progress directly from a functional block diagram to a prototype. Moreover, since they 'clip' directly onto the I^2C bus without any additional external interfacing, they allow a prototype system to be modified or upgraded simply by 'clipping' or 'unclipping' ICRO to or from the bus.

Here are some of the feature of I^2C- bus compatible ICRO which are particularly attractive to designer

- Functional blocks on the block diagram correspond with the actual ICRO designs proceed rapidly from block diagram to final schematic
- No need to design bus interfaces because the I^2C-bus interface is already integrated on the ICRO
- Integrated addressing and data-transfer protocol allow systems to be completely software-defined
- The same ICRO types can often be used in many different applications
- Design-time reduces as designers quickly become familiar with the frequently used functional book represented by I^2C-bus compatible and ICRO
- ICRO can be added to or remove from system without affecting any other circuits on the bus

In addition to these advantages, the CMOS ICRO in the I^2C-bus compatible range offer designers special feature which are particularly attractive for portable equipment and battery-backed systems.

They All Have:

- Extremely low current consumption
- High Noise immunity
- Wide operating temperature range

Manufacturer Benefits

I^2C-bus compatible ICRO don't only assist designer, they also give a wider range of benefits to the equipment manufacturer because:

- The simple 2-wire serial I^2C bus minimizes interconnections so ICRO have fewer pins and there are not so many PCB tracks; result- smaller and less expensive PCBs
- The completely integrated I^2C-bus protocol eliminates the need for address decoders and other 'glue logic'
- The multi-master capability of the I^2C-bus allows rapid testing and alignment of end-user equipment via external connections to an assembly line
- I^2C-bus handbook, I^2C Website: www.semiconductors.philips.com/I2C

Re-Configurable 6 Output CMOS TCXO

- *Fixed & Re-Configurable Multi-Frequency Oscillator*
- *Intuitive software and I²C interface*
- *Easily update system*
- *Software flexible, quick upgrades and changes*
- *Industry-standard packaging saves on board space*
- *Mult. outputs 1 pkg vs. mult. osc & assoc. comp.*
- *Performs well under all conditions*

Applications

- *High-end multimedia*
- *Communications*
- *Industrial*
- *A/D converters*
- *Consumer Applications*
- *New and innovative products*
- *Temperature-sensitive applications*

Series **CCT6RC**

Pb RoHS COMPLIANT 2002 / 95 / EC

Part Numbering Example: CCT6RC 1A 200.0 / 150.0 / 125.0 / 100.0 / 75.0 / 12.0

CCT6RC	1A	200	150	125	100	75	12
SERIES	PACKAGE STYLE	FREQUENCY A	FREQUENCY B	FREQUENCY C	FREQUENCY D	FREQUENCY E	FREQUENCY R
	1A=14 pin dip 9=9.6x11.4 SMD	0.2 - 200 MHz	0.2 - 200 MHz	0.2 - 200 MHz	0.2 - 200 MHz	25 - 200 MHz	

Specifications:	Min	Typ	Max	Unit
Frequency Range:				
Output A CMOS	0.2		200	MHz
Output B CMOS	0.2		200	MHz
Output C CMOS	0.2		200	MHz
Output D CMOS	0.2		200	MHz
Output E CMOS	25		200	MHz
Output R Fixed		12		MHz
Available Stability Options:	-2.5		2.5	ppm
Supply Voltage:	3.135	3.3	3.465	V
Operating Temperature Range Options:	-40		85	°C
Storage Temperature:	-55		125	°C
Duty Cycle:	40 45		60 55	% %
Start-Up Time:		3	10	mS
Aging (PPM/1st Year): Ta=25C, Vdd=3.3V			±1	ppm
Static Discharge Voltage Mil-Std 883, method 3015	2000			V
Output Load:				
CMOS, < 40 MHz			30	pF
CMOS, ≥ 40 MHz			15	pF
Output Level:	CMOS			
Packaging:	25 / Tube Tape & Reel			14 pin SMD

Notes: Recommended .01 µF bypass capacitor from Vcc to GND. Capacitor should be as close to oscillator as possible.

Cardinal Components, Inc.
155 Route 46 West
Wayne, NJ 07470
Rev: M-090414-14

TEL: (973)785-1333
E-MAIL: sales@cardinalxtal.com
WEB: http://www.cardinalxtal.com

Re-Configurable 6 Output CMOS TCXO

Series CCT6RC

Electrical Characteristics

	Description	Conditions	Min	Typ	Max	Unit
Ioh	Output High Current	Voh = (L)Vdd - 0.5, (L)Vdd = 3.3 V	12	24		mA
Iol	Output Low Current	Vol = .5, (L)Vdd = 3.3 V	12	24		mA
Vih	High Level Input Voltage	CMOS levels, % of Vdd	0.7			V
Vil	Low-Level Input Voltage	CMOS levels, % of Vdd			0.3	V
Iih	Input High Current	Vin = AVdd - 0.3 V		<1	10	µA
Iil	Input Low Current	Vin = + 0.3 V		<1	10	µA
Ioz	Output Leakage Current	tri-state outputs			10	µA
Idd	Total Power Supply Current	Example 1: 1 output@200 MHz; 1 output@66.666 MHz 1 output@100 MHz; 1 output@50 MHz 1 output@25 MHz; 1 output@12 MHz; Example 2: 1 output@200 Mhz; 1 output@155.52 MHz 1 output@100 Mhz; 1 output@77.76 MHz 1 output@50 Mhz; 1 output@12 MHz;		35 39		mA mA
Idds	Shutdown Power Supply Curr	Shutdown active		5	20	µA

Output Clock Switching Characteristics

	Description	Conditions	Min	Typ	Max	Unit
1/t1	Output Frequency	Clock output limit, CMOS, Commercial			200	MHz
t3	Rising Edge Slew Rate	Output clock rise time, 20% – 80% Vdd	0.75	1.4		nS
t4	Falling Edge Slew Rate	Output clock fall time, 20% – 80% Vdd	0.75	1.4		nS
t5	Output tri-state timing after SD/OE switches	Time for output to enter/leave tri-state mode		150	300	nS
t6	Clock Jitter measured at Vdd/2	Peak-to-Peak period jitter, CLK outputs		200		pS
	Frequency Switch Time	Change time		2	4	ms

ALL OUTPUTS, DUTY CYCLE, RISE/FALL TIME

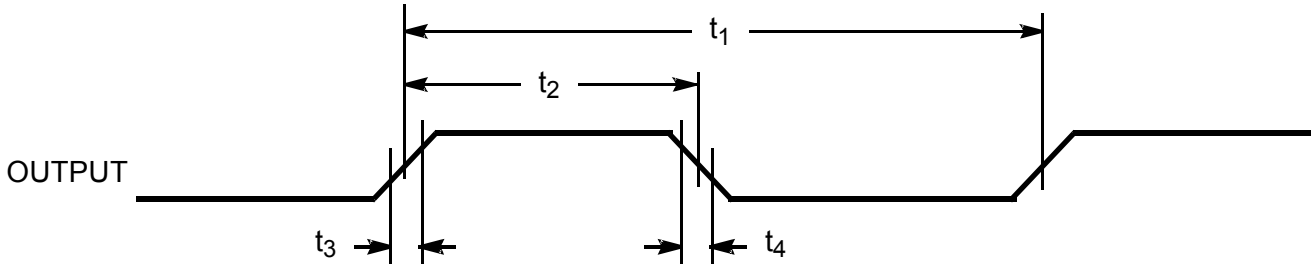

OUTPUT TRI-STATE TIMING

CLK OUTPUT JITTER

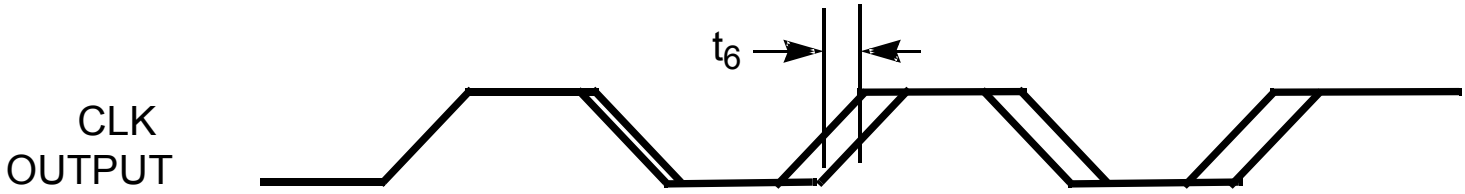

DIP

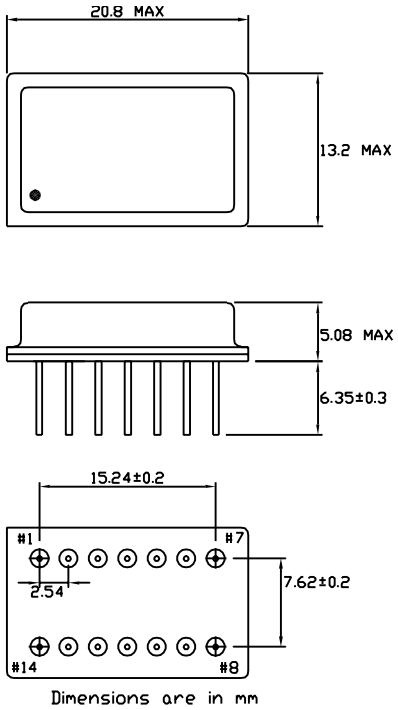

PIN FUNCTION
PIN 1 OE (CONNECT TO VDD)
PIN 2 SUSPEND (CONNECT TO GND)
PIN 3 VDD
PIN 4 CLK C OUTPUT
PIN 5 CONNECT TO PIN 6
PIN 6 CONNECT TO PIN 5
PIN 7 GND
PIN 8 12 MHz REF CLOCK OUTPUT
PIN 9 CLK D OUTPUT
PIN10 CLK E OUTPUT
PIN 11 SDAT
PIN 12 SCLK
PIN 13 CLK A OUTPUT
PIN 14 CLK B OUTPUT

SMD

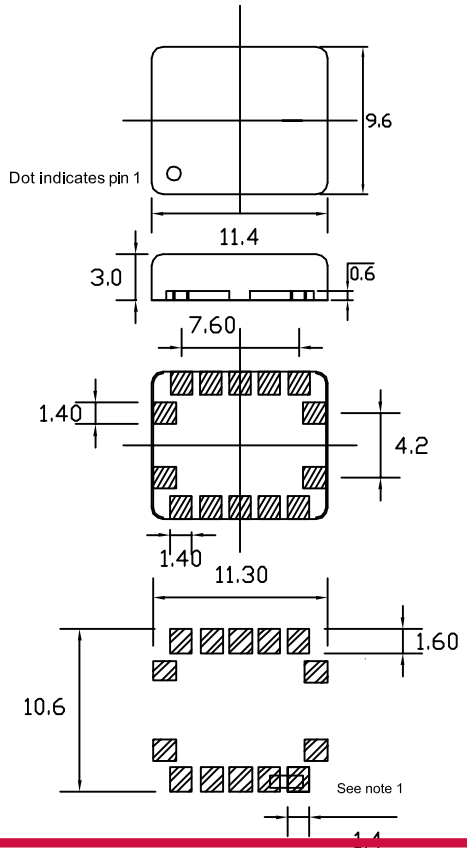

PIN FUNCTION
PIN 1 FACTORY USE (MAKE NO CONNECTION)
PIN 2 OE
PIN 3 VDD
PIN 4 CLK C OUTPUT
PIN 5 CONNECT TO PIN 6
PIN 6 CONNECT TO PIN 5
PIN 7 GND
PIN 8 12 MHz REF CLOCK OUTPUT
PIN 9 CLK D OUTPUT
PIN10 CLK E OUTPUT
PIN 11 SCLK
PIN 12 SDAT
PIN 13 CLK A OUTPUT
PIN 14 CLK B OUTPUT

Dimensions in mm
Recommended solder pad layout

Note1:
For proper operation pin 5 must be connected to pin 6

Cardinal Components, Inc.
155 Route 46 West
Wayne, NJ 07470

TEL: (973)785-1333
E-MAIL: sales@cardinalxtal.com
WEB: http://www.cardinalxtal.com

Flash Programmability:

Non-Volatile programming enables easy customization, ultrafast turnaround, performance tweaking, design timing margin testing, inventory control, lower part count, and more secure product supply. In addition, any part in the family can also be programmed multiple times, which reduces programming errors and provides an easy upgrade path for existing designs.

Feature of the I^2C-bus:

- Only two bus lines are required; a serial data line (SDA) and a serial clock line (SCL)
- Each device connected to the bus is software addressable by a unique address and simple master/slave relationship exist at all times; master can operate as a master- transmitter or as master-receivers
- It's a true multi-master bus including collision detection and arbitration to prevent data corruption if two or more master simultaneously initiate data transfer
- Serial 8-bit oriented, bidirectional data transfers can be made at up to 100 Kbit/s in the standard mode, up to 400 kbit/s in the fast-mode, or up to 3.4 Mbit/s in the High-speed mode

Designer Benefits:

I^2C bus compatible In Circuit Reconfigurable Oscillator "ICRO" allow a system design to rapidly progress directly from a functional block diagram to a prototype. Moreover, since they 'clip' directly onto the I^2C bus without any additional external interfacing, they allow a prototype system to be modified or upgraded simply by 'clipping' or 'unclipping' ICRO to or from the bus.

Here are some of the feature of I^2C- bus compatible ICRO which are particularly attractive to designer

- Functional blocks on the block diagram correspond with the actual ICRO designs proceed rapidly from block diagram to final schematic
- No need to design bus interfaces because the I^2C-bus interface is already integrated on the ICRO
- Integrated addressing and data-transfer protocol allow systems to be completely software-defined
- The same ICRO types can often be used in many different applications
- Design-time reduces as designers quickly become familiar with the frequently used functional book represented by I^2C-bus compatible and ICRO
- ICRO can be added to or remove from system without affecting any other circuits on the bus

In addition to these advantages, the CMOS ICRO in the I^2C-bus compatible range offer designers special feature which are particularly attractive for portable equipment and battery-backed systems.

They All Have:

- Extremely low current consumption
- High Noise immunity
- Wide operating temperature range

Manufacturer Benefits

I^2C-bus compatible ICRO don't only assist designer, they also give a wider range of benefits to the equipment manufacturer because:

- The simple 2-wire serial I^2C bus minimizes interconnections so ICRO have fewer pins and there are not so many PCB tracks; result- smaller and less expensive PCBs
- The completely integrated I^2C-bus protocol eliminates the need for address decoders and other 'glue logic'
- The multi-master capability of the I^2C-bus allows rapid testing and alignment of end-user equipment via external connections to an assembly line
- I^2C-bus handbook, I^2C Website: www.semiconductors.philips.com/I2C

Factory Prog. 3 Output PECL Oscillator

- *Full Custom Multi-Frequency Programmable Osc*
- *Reduced EMI by turning off unused output*
- *Factory Programmable*
- *Differential PECL Output*
- *Industry-standard packaging saves on board space*
- *Mult. outputs 1 pkg vs. mult. osc & assoc. comp.*
- *Increased Integration*

Applications

- *High-end multimedia*
- *Communications*
- *Industrial*
- *A/D converters*
- *Consumer Applications*
- *Product differentiation*
- *Low-power applications*

Series CCE3E

Pb RoHS COMPLIANT 2002 / 95 / EC

Part Numbering Example: CCE3E 1A 200.0 - 150.0

CCE3E	1A	200	150
SERIES	PACKAGE STYLE	FREQUENCY P/P-	FREQUENCY A
	1A=14 pin dip 9=9.6x11.4 SMD	100-400 MHz PECL	0.2 - 200 MHz

Specifications:	Min	Typ	Max	Unit
Frequency Range: Output PECL + Output PECL - Output A CMOS	 100 100 0.2		 400 400 200	 MHz MHz MHz
Available Stability Options:	-50		50	ppm
Supply Voltage:	3.135	3.3	3.465	V
Operating Temperature Range Options:	-40		85	°C
Storage Temperature:	-55		125	°C
Duty Cycle:	40 45		60 55	% %
Start-Up Time:		3	10	mS
Aging (PPM/1st Year): Ta=25C, Vdd=3.3V			±5	
Static Discharge Voltage Mil-Std 883, method 3015	2000			V
Output Load: * CMOS, < 40 MHz CMOS, ≥ 40 MHz			 30 15	 pF pF
Output Level:	PECL/CMOS			
Packaging:	25 / Tube Tape & Reel			14 pin SMD

Notes: Recommended .01 µF bypass capacitor from Vcc to GND. Capacitor should be as close to oscillator as possib
* LV PECL outputs require an external termination network

Cardinal Components, Inc.
155 Route 46 West
Wayne, NJ 07470
Rev: M-090414-14

TEL: (973)785-1333
E-MAIL: sales@cardinalxtal.com
WEB: http://www.cardinalxtal.com

Factory Prog. 3 Output PECL Oscillator

Series CCE3E

Electrical Characteristics

	Description	Conditions	Min	Typ	Max	Unit
Ioh	Output High Current	Voh = (L)Vdd - 0.5, (L)Vdd = 3.3 V	12	24		mA
Iol	Output Low Current	Vol = .5, (L)Vdd = 3.3 V	12	24		mA
Vih	High Level Input Voltage	CMOS levels, % of Vdd	0.7			V
Vil	Low-Level Input Voltage	CMOS levels, % of Vdd			0.3	V
Iih	Input High Current	Vin = AVdd - 0.3 V		<1	10	µA
Iil	Input Low Current	Vin = + 0.3 V		<1	10	µA
Ioz	Output Leakage Current	tri-state outputs			10	µA
Idd	Total Power Supply Current	Example 1: 1 PECL output @155.52 MHz 1 CMOS output @19.44 MHz Example 2: 1 PECL output @400 MHz 1 CMOS output @106.25 MHz		50 100		mA mA
Idds	Shutdown Power Supply Curr	Shutdown active		5	20	µA

Output Clock Switching Characteristics

	Description	Conditions	Min	Typ	Max	Unit
1/t1	Output Frequency	Clock output limit, CMOS, Commercial Clock output limit, PECL, Commercial	0.2 100		200 400	MHz MHz
t3	Rising Edge Slew Rate	Output clock rise time, 20% – 80% Vdd	0.75	1.4		nS
t4	Falling Edge Slew Rate	Output clock fall time, 20% – 80% Vdd	0.75	1.4		nS
t5	Output tri-state timing after SD/OE switches	Time for output to enter/leave tri-state mode		150	300	nS
t6	Clock Jitter measured at Vdd/2	Peak-to-Peak period jitter, CLK outputs		200		pS
v7	P+/P- Crossing Point	Crossing point ref. to Vdd/2, bal res. net	-0.2	0	0.2	V

Cardinal Components, Inc.
155 Route 46 West
Wayne, NJ 07470
Rev: M-090414-14

TEL: (973)785-1333
E-MAIL: sales@cardinalxtal.com
WEB: http://www.cardinalxtal.com

TEST CIRCUIT

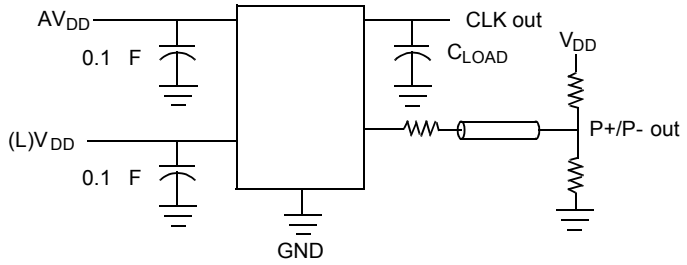

ALL OUTPUTS, DUTY CYCLE, RISE/FALL TIME

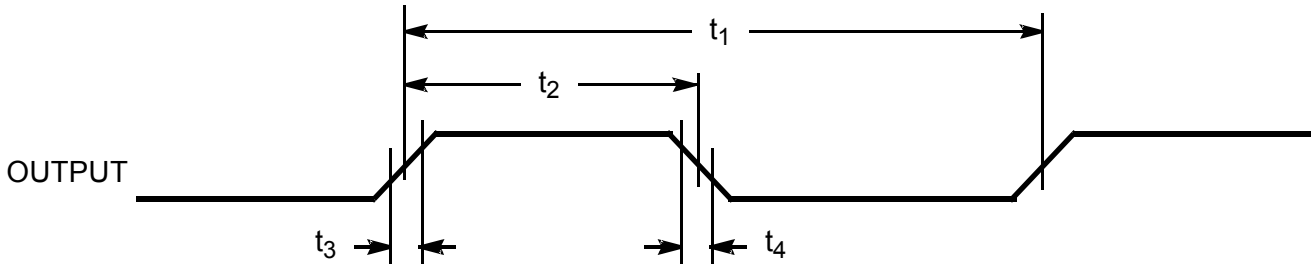

OUTPUT 3-STATE TIMING

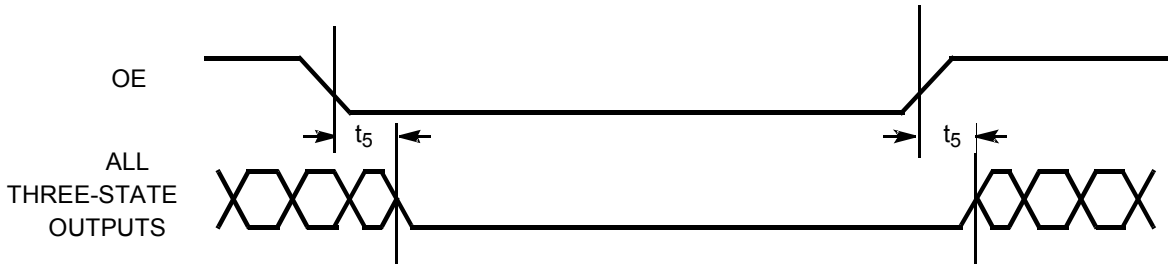

CLK OUTPUT JITTER

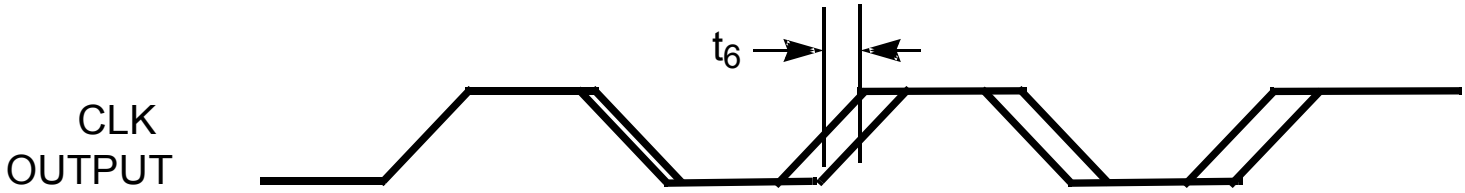

P+/P- CROSSING POINT AND JITTER

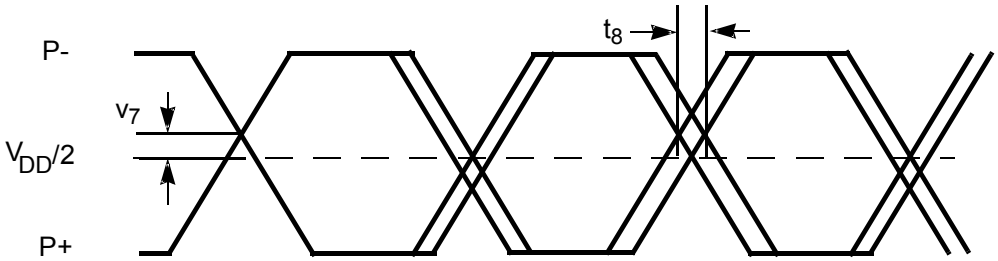

DIP

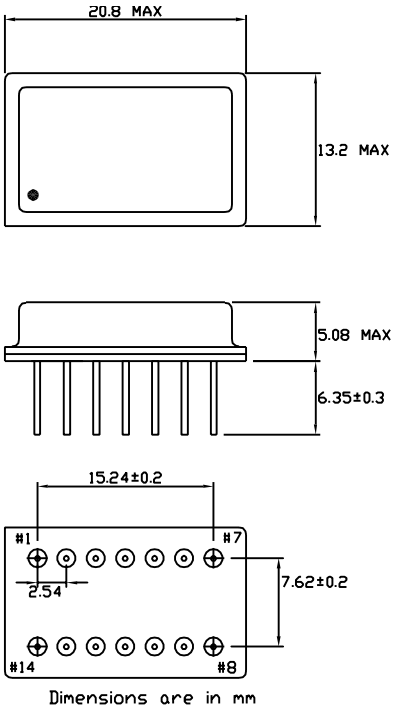

PIN FUNCTION
PIN 1 OE (CONNECT TO VDD)
PIN 2 SUSPEND (CONNECT TO GND)
PIN 3 VDD
PIN 4 FACTORY USE (MAKE NO CONNECTION)
PIN 5 CONNECT TO PIN 6
PIN 6 CONNECT TO PIN 5
PIN 7 GND
PIN 8 FACTORY USE (MAKE NO CONNECTION)
PIN 9 PECL - OUTPUT
PIN10 PECL + OUTPUT
PIN 11 FACTORY USE (MAKE NO CONNECTION)
PIN 12 FACTORY USE (MAKE NO CONNECTION)
PIN 13 CLK A OUTPUT
PIN 14 FACTORY USE (MAKE NO CONNECTION)

SMD

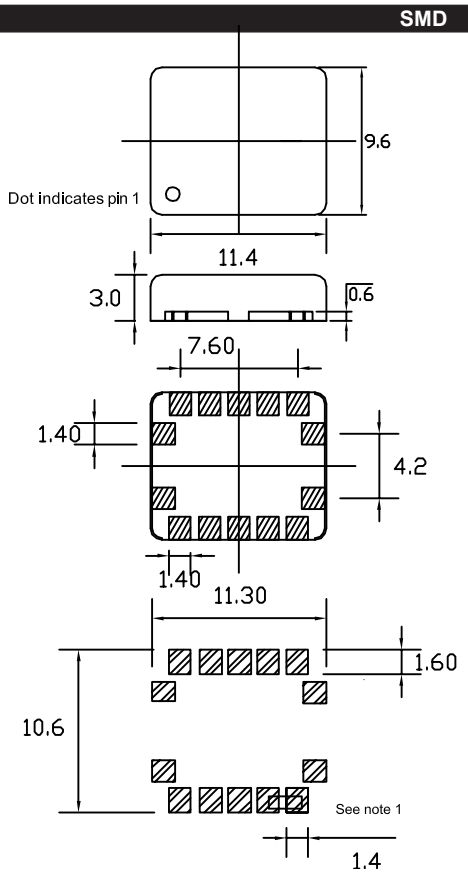

PIN FUNCTION
PIN 1 FACTORY USE (MAKE NO CONNECTION)
PIN 2 OE
PIN 3 VDD
PIN 4 FACTORY USE (MAKE NO CONNECTION)
PIN 5 CONNECT TO PIN 6
PIN 6 CONNECT TO PIN 5
PIN 7 GND
PIN 8 FACTORY USE (MAKE NO CONNECTION)
PIN 9 PECL - OUTPUT
PIN10 PECL + OUTPUT
PIN 11 FACTORY USE (MAKE NO CONNECTION)
PIN 12 FACTORY USE (MAKE NO CONNECTION)
PIN 13 CLK A OUTPUT
PIN 14 FACTORY USE (MAKE NO CONNECTION)

Dimensions in mm
Recommended solder pad layout

Note1:
For proper operation pin 5 must be connected to pin 6

Cardinal Components, Inc.
155 Route 46 West
Wayne, NJ 07470
Rev: M-090414-14

TEL: (973)785-1333
E-MAIL: sales@cardinalxtal.com
WEB: http://www.cardinalxtal.com

Factory Prog. 4 Output PECL Oscillator

- *Full Custom Multi-Frequency Programmable Osc*
- *Reduced EMI by turning off unused output*
- *Factory Programmable*
- *Differential PECL Output*
- *Industry-standard packaging saves on board space*
- *Mult. outputs 1 pkg vs. mult. osc & assoc. comp.*
- *Lower system cost*

Applications

- *High-end multimedia*
- *Communications*
- *Industrial*
- *A/D converters*
- *Consumer Applications*
- *Product differentiation*
- *Low-power applications*

Series CCE4E

Pb RoHS COMPLIANT 2002 / 95 / EC

Part Numbering Example: CCE4E 1A 200.0 - 150.0 / 125.0

CCE4E	1A	200	150	125
SERIES	PACKAGE STYLE	FREQUENCY P/P-	FREQUENCY A	FREQUENCY B
	1A=14 pin dip 9=9.6x11.4 SMD	100-400 MHz PECL	0.2 - 200 MHz	0.2 - 200 MHz

Specifications:	Min	Typ	Max	Unit
Frequency Range:				
Output PECL +	100		400	MHz
Output PECL -	100		400	MHz
Output A CMOS	0.2		200	MHz
Output B CMOS	0.2		200	MHz
Available Stability Options:	-50		50	ppm
Supply Voltage:	3.135	3.3	3.465	V
Operating Temperature Range Options:	-40		85	°C
Storage Temperature:	-55		125	°C
Duty Cycle:	40 45		60 55	% %
Start-Up Time:		3	10	mS
Aging (PPM/1st Year): Ta=25C, Vdd=3.3V			±5	
Static Discharge Voltage Mil-Std 883, method 3015	2000			V
Output Load: *				
CMOS, < 40 MHz			30	pF
CMOS, ≥ 40 MHz			15	pF
Output Level:	PECL/CMOS			
Packaging:	25 / Tube Tape & Reel			14 pin SMD

Notes: Recommended .01 µF bypass capacitor from Vcc to GND. Capacitor should be as close to oscillator as possible.
* LV PECL outputs require an external termination network

Cardinal Components, Inc.
155 Route 46 West
Wayne, NJ 07470
Rev: M-090414-14

TEL: (973)785-1333
E-MAIL: sales@cardinalxtal.com
WEB: http://www.cardinalxtal.com

Factory Prog. 4 Output PECL Oscillator

Series CCE4E

Electrical Characteristics

	Description	Conditions	Min	Typ	Max	Unit
Ioh	Output High Current	Voh = (L)Vdd - 0.5, (L)Vdd = 3.3 V	12	24		mA
Iol	Output Low Current	Vol = .5, (L)Vdd = 3.3 V	12	24		mA
Vih	High Level Input Voltage	CMOS levels, % of Vdd	0.7			V
Vil	Low-Level Input Voltage	CMOS levels, % of Vdd			0.3	V
Iih	Input High Current	Vin = AVdd - 0.3 V		<1	10	µA
Iil	Input Low Current	Vin = + 0.3 V		<1	10	µA
Ioz	Output Leakage Current	tri-state outputs			10	µA
Idd	Total Power Supply Current	Example 1: 1 PECL output @155.52 MHz 1 CMOS output @19.44 MHz 1 CMOS output @38.88 MHz Example 2: 1 PECL output @400 MHz 1 CMOS output @106.25 MHz 1 CMOS output @53.125 MHz		26 48		mA mA
Idds	Shutdown Power Supply Curr	Shutdown active		5	20	µA

Output Clock Switching Characteristics

	Description	Conditions	Min	Typ	Max	Unit
1/t1	Output Frequency	Clock output limit, CMOS, Commercial Clock output limit, PECL, Commercial	0.2 100		200 400	MHz MHz
t3	Rising Edge Slew Rate	Output clock rise time, 20% – 80% Vdd	0.75	1.4		nS
t4	Falling Edge Slew Rate	Output clock fall time, 20% – 80% Vdd	0.75	1.4		nS
t5	Output tri-state timing after SD/OE switches	Time for output to enter/leave tri-state mode		150	300	nS
t6	Clock Jitter measured at Vdd/2	Peak-to-Peak period jitter, CLK outputs		200		pS
v7	P+/P- Crossing Point	Crossing point ref. to Vdd/2, bal res. net	-0.2	0	0.2	V

TEST CIRCUIT

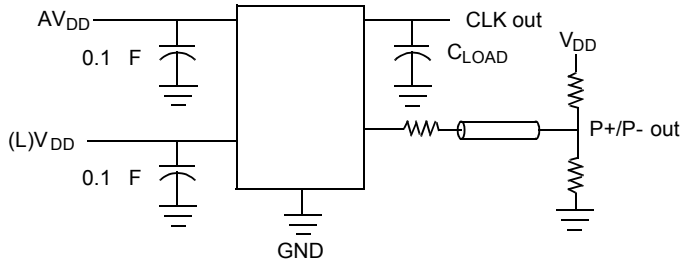

ALL OUTPUTS, DUTY CYCLE, RISE/FALL TIME

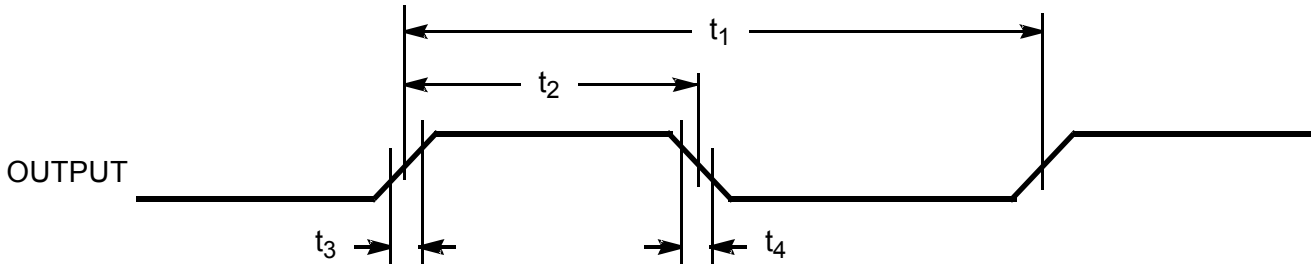

OUTPUT 3-STATE TIMING

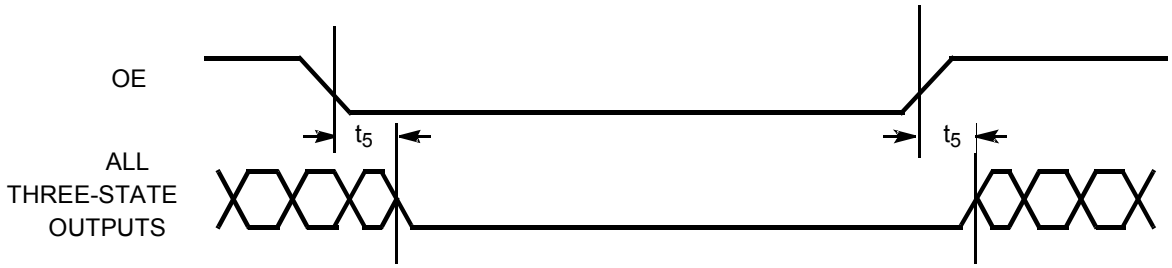

CLK OUTPUT JITTER

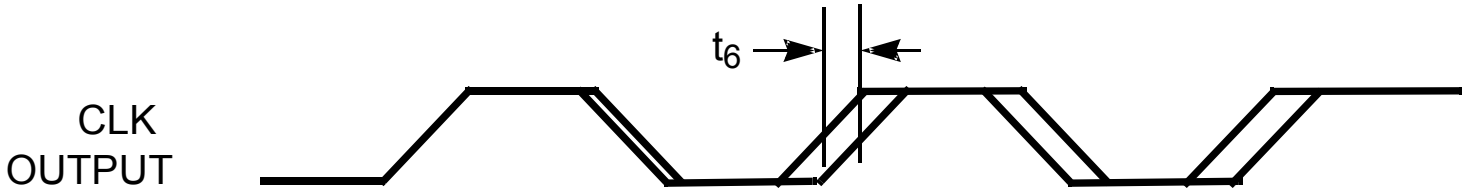

P+/P- CROSSING POINT AND JITTER

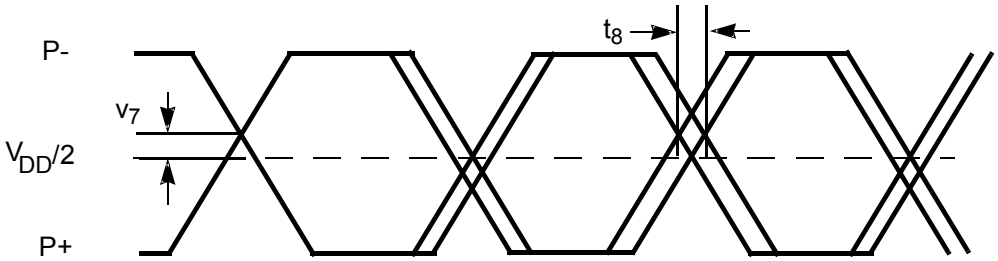

DIP

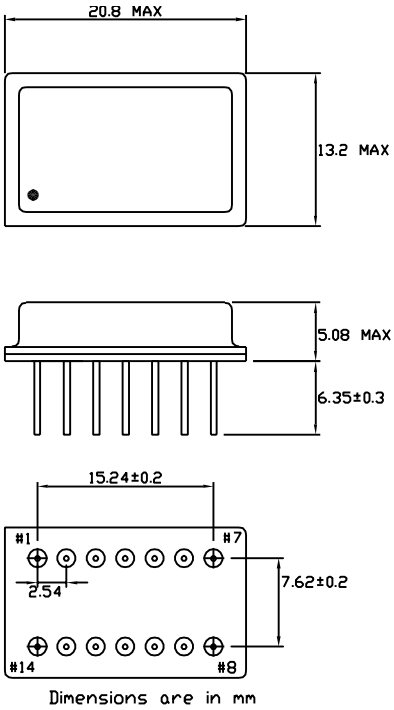

PIN FUNCTION
PIN 1 OE (CONNECT TO VDD)
PIN 2 SUSPEND (CONNECT TO GND)
PIN 3 VDD
PIN 4 FACTORY USE (MAKE NO CONNECTION)
PIN 5 CONNECT TO PIN 6
PIN 6 CONNECT TO PIN 5
PIN 7 GND
PIN 8 FACTORY USE (MAKE NO CONNECTION)
PIN 9 PECL - OUTPUT
PIN10 PECL + OUTPUT
PIN 11 FACTORY USE (MAKE NO CONNECTION)
PIN 12 FACTORY USE (MAKE NO CONNECTION)
PIN 13 CLK A OUTPUT
PIN 14 CLK B OUTPUT

SMD

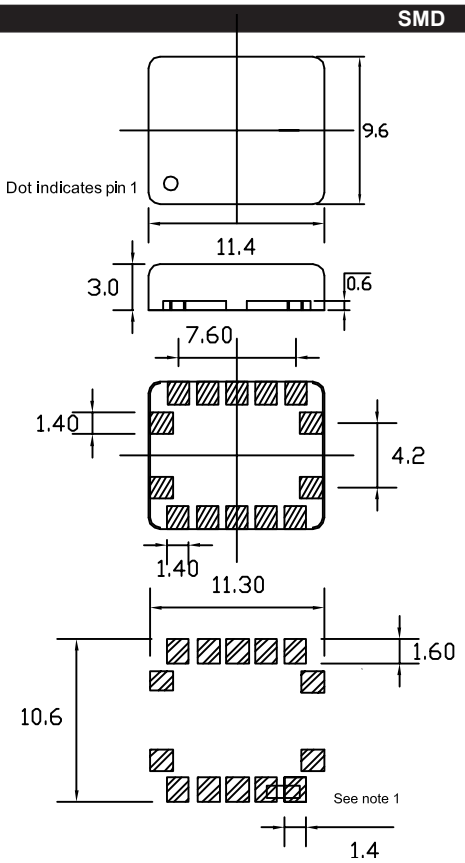

PIN FUNCTION
PIN 1 FACTORY USE (MAKE NO CONNECTION)
PIN 2 OE
PIN 3 VDD
PIN 4 FACTORY USE (MAKE NO CONNECTION)
PIN 5 CONNECT TO PIN 6
PIN 6 CONNECT TO PIN 5
PIN 7 GND
PIN 8 FACTORY USE (MAKE NO CONNECTION)
PIN 9 PECL - OUTPUT
PIN10 PECL + OUTPUT
PIN 11 FACTORY USE (MAKE NO CONNECTION)
PIN 12 FACTORY USE (MAKE NO CONNECTION)
PIN 13 CLK A OUTPUT
PIN 14 CLK B OUTPUT

Dimensions in mm
Recommended solder pad layout

Note1:
For proper operation pin 5 must be connected to pin 6

Factory Prog. 5 Output PECL Oscillator

- *Full Custom Multi-Frequency Programmable Osc*
- *Reduced EMI by turning off unused output*
- *Factory Programmable*
- *Differential PECL Output*
- *Industry-standard packaging saves on board space*
- *Mult. outputs 1 pkg vs. mult. osc & assoc. comp.*
- *Lower system cost*

Applications

- *High-end multimedia*
- *Communications*
- *Industrial*
- *A/D converters*
- *Consumer Applications*
- *Product differentiation*
- *Low-power applications*

Series CCE5E

Pb RoHS COMPLIANT 2002 / 95 / EC

Part Numbering Example: CCE5E 1A 200.0 - 150.0 / 125.0 / 100.0

CCE5E	1A	200	150	125	100
SERIES	PACKAGE STYLE	FREQUENCY P/P-	FREQUENCY A	FREQUENCY B	FREQUENCY C
	1A=14 pin dip 9=9.6x11.4 SMD	100-400 MHz PECL	0.2 - 200 MHz	0.2 - 200 MHz	0.2 - 200 MHz

Specifications:	Min	Typ	Max	Unit
Frequency Range:				
Output PECL +	100		400	MHz
Output PECL -	100		400	MHz
Output A CMOS	0.2		200	MHz
Output B CMOS	0.2		200	MHz
Output C CMOS	0.2		200	MHz
Available Stability Options:	-50		50	ppm
Supply Voltage:	3.135	3.3	3.465	V
Operating Temperature Range Options:	-40		85	°C
Storage Temperature:	-55		125	°C
Duty Cycle:	40 45		60 55	% %
Start-Up Time:		3	10	mS
Aging (PPM/1st Year): Ta=25C, Vdd=3.3V			±5	
Static Discharge Voltage Mil-Std 883, method 3015	2000			V
Output Load: *				
CMOS, < 40 MHz			30	pF
CMOS, ≥ 40 MHz			15	pF
Output Level:	PECL/CMOS			
Packaging:	25 / Tube Tape & Reel			14 pin SMD

Notes: Recommended .01 µF bypass capacitor from Vcc to GND. Capacitor should be as close to oscillator as possible.
* LV PECL outputs require an external termination network

Cardinal Components, Inc.
155 Route 46 West
Wayne, NJ 07470
Rev: M-090414-14

TEL: (973)785-1333
E-MAIL: sales@cardinalxtal.com
WEB: http://www.cardinalxtal.com

Factory Prog. 5 Output PECL Oscillator

Series CCE5E

Electrical Characteristics

	Description	Conditions	Min	Typ	Max	Unit
Ioh	Output High Current	Voh = (L)Vdd - 0.5, (L)Vdd = 3.3 V	12	24		mA
Iol	Output Low Current	Vol = .5, (L)Vdd = 3.3 V	12	24		mA
Vih	High Level Input Voltage	CMOS levels, % of Vdd	0.7			V
Vil	Low-Level Input Voltage	CMOS levels, % of Vdd			0.3	V
Iih	Input High Current	Vin = AVdd - 0.3 V		<1	10	µA
Iil	Input Low Current	Vin = + 0.3 V		<1	10	µA
Ioz	Output Leakage Current	tri-state outputs			10	µA
Idd	Total Power Supply Current	Example 1: 1 PECL output @155.52 MHz 1 CMOS output @19.44 MHz 1 CMOS output @38.88 MHz 1 CMOS output @77.76 MHz Example 2: 1 PECL output @400 MHz 1 CMOS output @106.25 MHz 1 CMOS output @200 MHz 1 CMOS output @100 MHz		29 59		mA mA
Idds	Shutdown Power Supply Curr	Shutdown active		5	20	µA

Output Clock Switching Characteristics

	Description	Conditions	Min	Typ	Max	Unit
1/t1	Output Frequency	Clock output limit, CMOS, Commercial Clock output limit, PECL, Commercial	0.2 100		200 400	MHz MHz
t3	Rising Edge Slew Rate	Output clock rise time, 20% – 80% Vdd	0.75	1.4		nS
t4	Falling Edge Slew Rate	Output clock fall time, 20% – 80% Vdd	0.75	1.4		nS
t5	Output tri-state timing after SD/OE switches	Time for output to enter/leave tri-state mode		150	300	nS
t6	Clock Jitter measured at Vdd/2	Peak-to-Peak period jitter, CLK outputs		200		pS
v7	P+/P- Crossing Point	Crossing point ref. to Vdd/2, bal res. net	-0.2	0	0.2	V

Cardinal Components, Inc.
155 Route 46 West
Wayne, NJ 07470
Rev: M-090414-14

TEL: (973)785-1333
E-MAIL: sales@cardinalxtal.com
WEB: http://www.cardinalxtal.com

Series CCE5E

TEST CIRCUIT

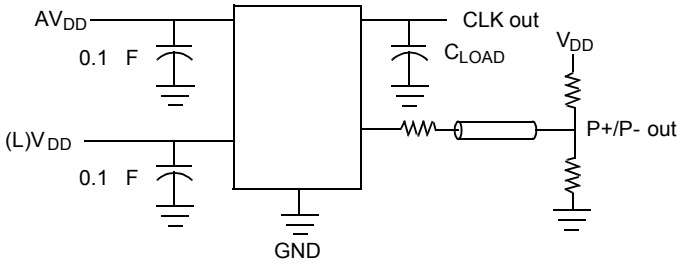

ALL OUTPUTS, DUTY CYCLE, RISE/FALL TIME

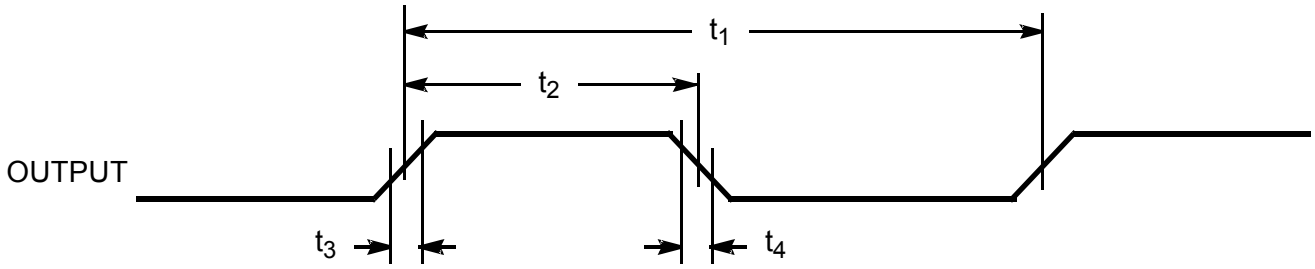

OUTPUT 3-STATE TIMING

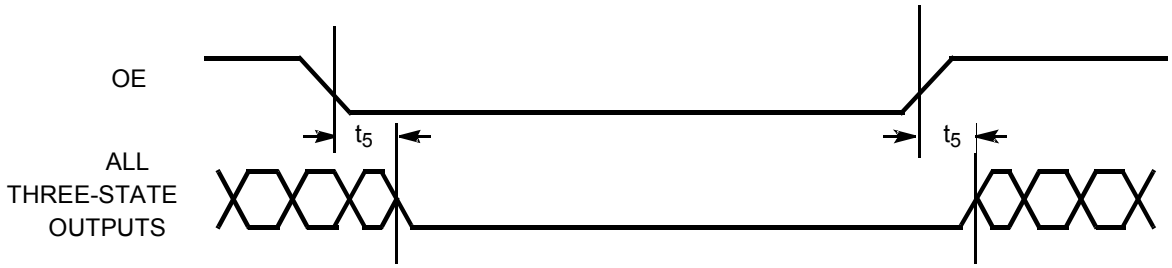

CLK OUTPUT JITTER

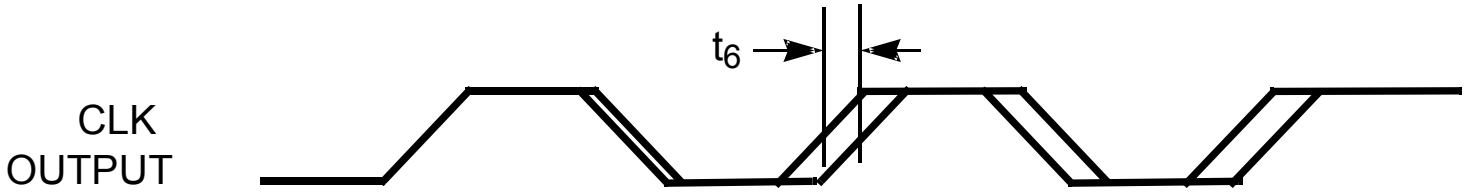

P+/P- CROSSING POINT AND JITTER

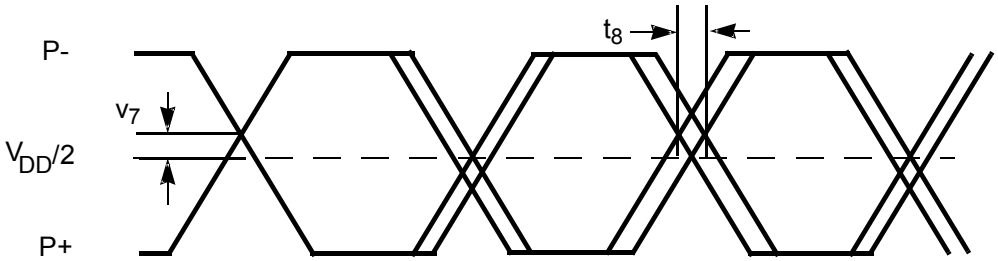

Cardinal Components, Inc.
155 Route 46 West
Wayne, NJ 07470
Rev: M-090414-14

TEL: (973)785-1333
E-MAIL: sales@cardinalxtal.com
WEB: http://www.cardinalxtal.com

DIP

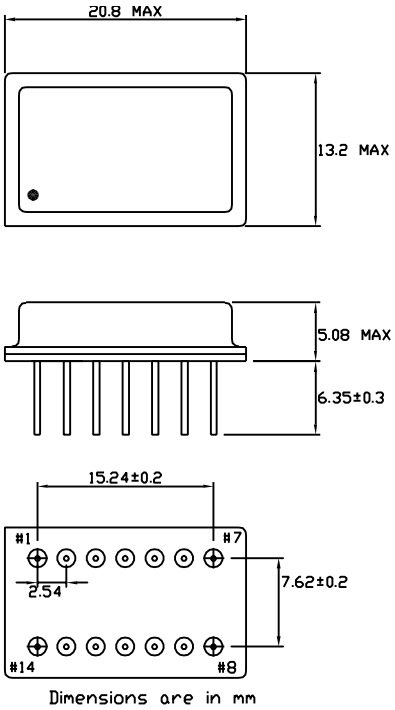

PIN FUNCTION
PIN 1 OE (CONNECT TO VDD)
PIN 2 SUSPEND (CONNECT TO GND)
PIN 3 VDD
PIN 4 CLK C OUTPUT
PIN 5 CONNECT TO PIN 6
PIN 6 CONNECT TO PIN 5
PIN 7 GND
PIN 8 FACTORY USE (MAKE NO CONNECTION)
PIN 9 PECL - OUTPUT
PIN10 PECL + OUTPUT
PIN 11 FACTORY USE (MAKE NO CONNECTION)
PIN 12 FACTORY USE (MAKE NO CONNECTION)
PIN 13 CLK A OUTPUT
PIN 14 CLK B OUTPUT

SMD

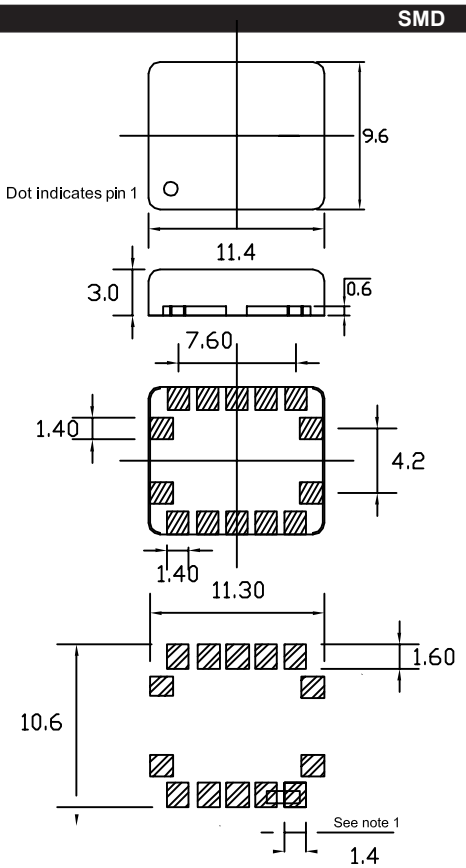

PIN FUNCTION
PIN 1 FACTORY USE (MAKE NO CONNECTION)
PIN 2 OE
PIN 3 VDD
PIN 4 CLK C OUTPUT
PIN 5 CONNECT TO PIN 6
PIN 6 CONNECT TO PIN 5
PIN 7 GND
PIN 8 FACTORY USE (MAKE NO CONNECTION)
PIN 9 PECL - OUTPUT
PIN10 PECL + OUTPUT
PIN 11 FACTORY USE (MAKE NO CONNECTION)
PIN 12 FACTORY USE (MAKE NO CONNECTION)
PIN 13 CLK A OUTPUT
PIN 14 CLK B OUTPUT

Dimensions in mm
Recommended solder pad layout

Note1:
For proper operation pin 5 must be connected to pin 6

Cardinal Components, Inc.
155 Route 46 West
Wayne, NJ 07470

TEL: (973)785-1333
E-MAIL: sales@cardinalxtal.com
WEB: http://www.cardinalxtal.com

Factory Prog. 6 Output PECL Oscillator

- *Full Custom Multi-Frequency Programmable Osc*
- *Reduced EMI by turning off unused output*
- *Factory Programmable*
- *Differential PECL Output*
- *Industry-standard packaging saves on board space*
- *Mult. outputs 1 pkg vs. mult. osc & assoc. comp.*
- *Lower system cost*

Applications

- *High-end multimedia*
- *Communications*
- *Industrial*
- *A/D converters*
- *Consumer Applications*
- *Product differentiation*
- *Low-power applications*

Series CCE6E

Pb RoHS COMPLIANT 2002 / 95 / EC

Part Numbering Example: CCE6E 1A 200.0 - 150.0 / 125.0 / 100.0 / 12.0

CCE6E	1A	200	150	125	100	12
SERIES	PACKAGE STYLE	FREQUENCY P/P-	FREQUENCY A	FREQUENCY B	FREQUENCY C	FREQUENCY R
	1A=14 pin dip 9=9.6x11.4 SMD	100-400 MHz PECL	0.2 - 200 MHz	0.2 - 200 MHz	0.2 - 200 MHz	

Specifications:	Min	Typ	Max	Unit
Frequency Range:				
Output PECL +	100		400	MHz
Output PECL -	100		400	MHz
Output A CMOS	0.2		200	MHz
Output B CMOS	0.2		200	MHz
Output C CMOS	0.2		200	MHz
Output R Fixed		12		MHz
Available Stability Options:	-50		50	ppm
Supply Voltage:	3.135	3.3	3.465	V
Operating Temperature Range Options:	-40		85	°C
Storage Temperature:	-55		125	°C
Duty Cycle:	40 45		60 55	% %
Start-Up Time:		3	10	mS
Aging (PPM/1st Year): Ta=25C, Vdd=3.3V			±5	
Static Discharge Voltage Mil-Std 883, method 3015	2000			V
Output Load: *				
CMOS, < 40 MHz			30	pF
CMOS, ≥ 40 MHz			15	pF
Output Level:	PCEL/CMOS			
Packaging:	25 / Tube Tape & Reel			14 pin SMD

Notes: Recommended .01 µF bypass capacitor from Vcc to GND. Capacitor should be as close to oscillator as possible.
* LV PECL outputs require an external termination network

Cardinal Components, Inc.
155 Route 46 West
Wayne, NJ 07470
Rev: M-090414-14

TEL: (973)785-1333
E-MAIL: sales@cardinalxtal.com
WEB: http://www.cardinalxtal.com

Factory Prog. 6 Output PECL Oscillator

Series CCE6E

Electrical Characteristics

	Description	Conditions	Min	Typ	Max	Unit
Ioh	Output High Current	Voh = (L)Vdd - 0.5, (L)Vdd = 3.3 V	12	24		mA
Iol	Output Low Current	Vol = .5, (L)Vdd = 3.3 V	12	24		mA
Vih	High Level Input Voltage	CMOS levels, % of Vdd	0.7			V
Vil	Low-Level Input Voltage	CMOS levels, % of Vdd			0.3	V
Iih	Input High Current	Vin = AVdd - 0.3 V		<1	10	µA
Iil	Input Low Current	Vin = + 0.3 V		<1	10	µA
Ioz	Output Leakage Current	tri-state outputs			10	µA
Idd	Total Power Supply Current	Example 1: 1 PECL output @155.52 MHz 1 CMOS output @19.44 MHz 1 CMOS output @38.88 MHz 1 CMOS output @77.76 MHz 1 CMOS output @12 MHz Example 2: 1 PECL output @400 MHz 1 CMOS output @106.25 MHz 1 CMOS output @200 MHz 1 CMOS output @100 MHz 1 CMOS output @12 MHz		29 59		mA mA
Idds	Shutdown Power Supply Curr	Shutdown active		5	20	µA

Output Clock Switching Characteristics

	Description	Conditions	Min	Typ	Max	Unit
1/t1	Output Frequency	Clock output limit, CMOS, Commercial Clock output limit, PECL, Commercial	0.2 100		200 400	MHz MHz
t3	Rising Edge Slew Rate	Output clock rise time, 20% – 80% Vdd	0.75	1.4		nS
t4	Falling Edge Slew Rate	Output clock fall time, 20% – 80% Vdd	0.75	1.4		nS
t5	Output tri-state timing after SD/OE switches	Time for output to enter/leave tri-state mode		150	300	nS
t6	Clock Jitter measured at Vdd/2	Peak-to-Peak period jitter, CLK outputs		200		pS
v7	P+/P- Crossing Point	Crossing point ref. to Vdd/2, bal res. net	-0.2	0	0.2	V

Cardinal Components, Inc.
155 Route 46 West
Wayne, NJ 07470

TEL: (973)785-1333
E-MAIL: sales@cardinalxtal.com
WEB: http://www.cardinalxtal.com

TEST CIRCUIT

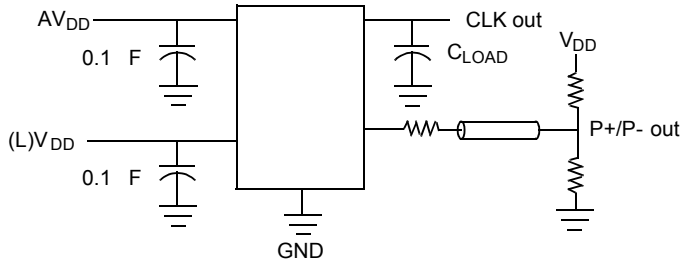

ALL OUTPUTS, DUTY CYCLE, RISE/FALL TIME

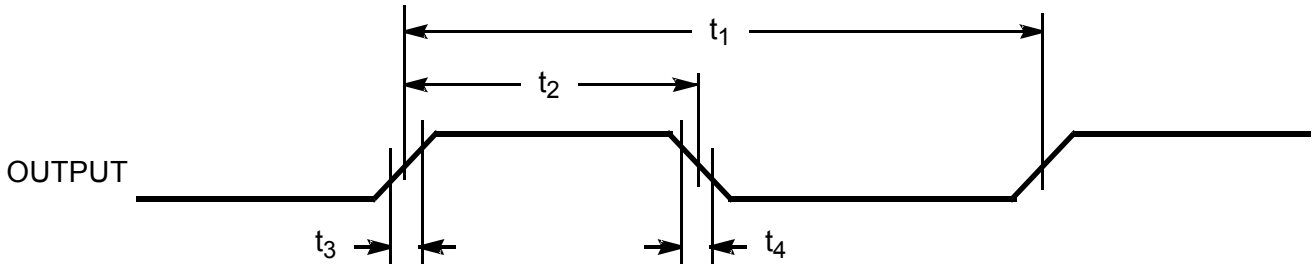

OUTPUT 3-STATE TIMING

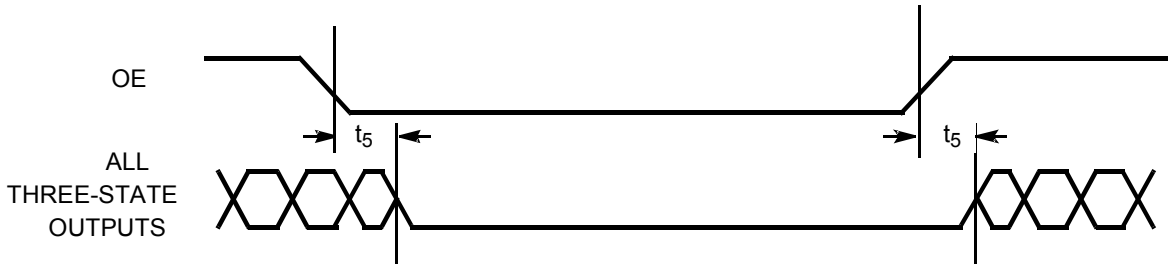

CLK OUTPUT JITTER

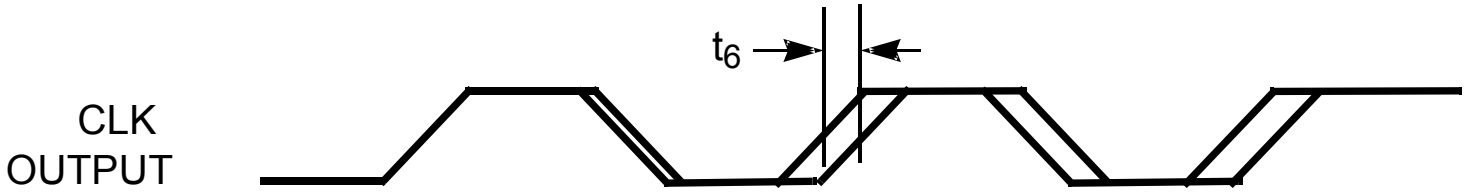

P+/P- CROSSING POINT AND JITTER

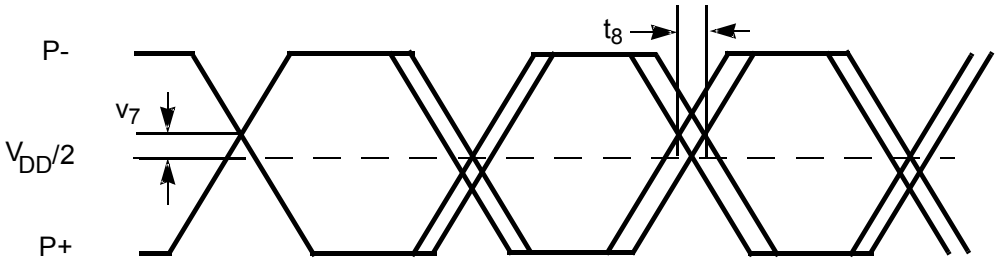

DIP

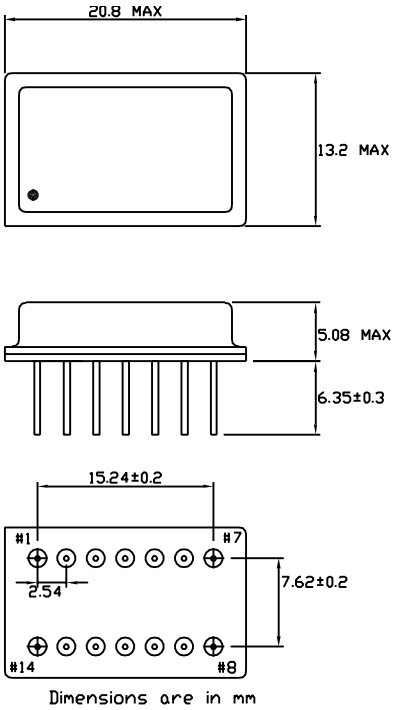

PIN FUNCTION
PIN 1 OE (CONNECT TO VDD)
PIN 2 SUSPEND (CONNECT TO GND)
PIN 3 VDD
PIN 4 CLK C OUTPUT
PIN 5 CONNECT TO PIN 6
PIN 6 CONNECT TO PIN 5
PIN 7 GND
PIN 8 12 MHz REF CLOCK OUTPUT
PIN 9 PECL - OUTPUT
PIN10 PECL + OUTPUT
PIN 11 FACTORY USE (MAKE NO CONNECTION)
PIN 12 FACTORY USE (MAKE NO CONNECTION)
PIN 13 CLK A OUTPUT
PIN 14 CLK B OUTPUT

SMD

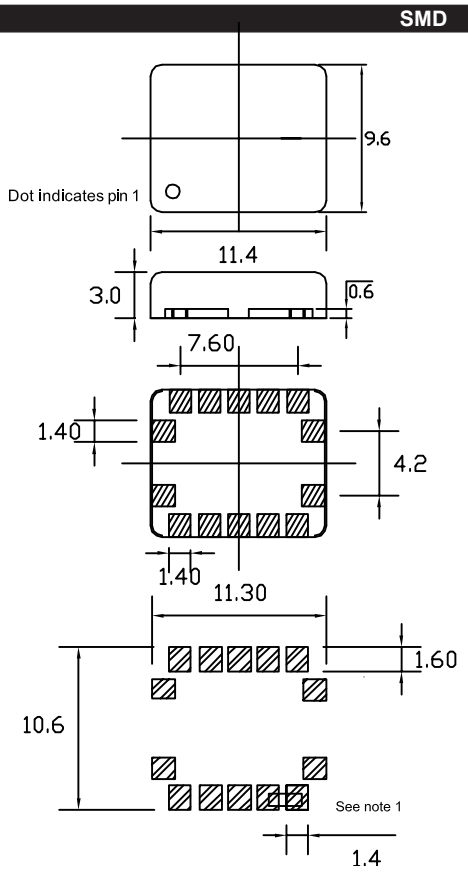

PIN FUNCTION
PIN 1 FACTORY USE (MAKE NO CONNECTION)
PIN 2 OE
PIN 3 VDD
PIN 4 CLK C OUTPUT
PIN 5 CONNECT TO PIN 6
PIN 6 CONNECT TO PIN 5
PIN 7 GND
PIN 8 12 MHz REF CLOCK OUTPUT
PIN 9 PECL - OUTPUT
PIN10 PECL + OUTPUT
PIN 11 FACTORY USE (MAKE NO CONNECTION)
PIN 12 FACTORY USE (MAKE NO CONNECTION)
PIN 13 CLK A OUTPUT
PIN 14 CLK B OUTPUT

Dimensions in mm
Recommended solder pad layout

Note1:
For proper operation pin 5 must be connected to pin 6

Cardinal Components, Inc.
155 Route 46 West
Wayne, NJ 07470
Rev: M-090414-14

TEL: (973)785-1333
E-MAIL: sales@cardinalxtal.com
WEB: http://www.cardinalxtal.com

Factory Prog. 4 Output PECL TCXO

- *Full Custom Multi-Frequency Programmable Osc*
- *Reduced EMI by turning off unused output*
- *Factory Programmable*
- *Differential PECL Output*
- *Industry-standard packaging saves on board space*
- *Mult. outputs 1 pkg vs. mult. osc & assoc. comp.*
- *Performs well under all conditions*

Applications

- *High-end multimedia*
- *Communications*
- *Industrial*
- *A/D converters*
- *Consumer Applications*
- *Low tolerance applications*
- *Low-power applications*

Series CCT4E

Pb RoHS COMPLIANT 2002 / 95 / EC

Part Numbering Example: CCT4E 1A 200.0 - 150.0 / 125.0

CCT4E	1A	200	150	125
SERIES	PACKAGE STYLE	FREQUENCY P/P-	FREQUENCY A	FREQUENCY B
	1A=14 pin dip 9=9.6x11.4 SMD	100-400 MHz PECL	0.2 - 200 MHz CMOS	0.2 - 200 MHz CMOS

Specifications:	Min	Typ	Max	Unit
Frequency Range:				
Output PECL +	100		400	MHz
Output PECL -	100		400	MHz
Output A CMOS	0.2		200	MHz
Output B CMOS	0.2		200	MHz
Available Stability Options:	-2.5		2.5	ppm
Supply Voltage:	3.135	3.3	3.465	V
Operating Temperature Range Options:	-40		85	°C
Storage Temperature:	-55		125	°C
Duty Cycle:	40 45		60 55	% %
Start-Up Time:		3	10	mS
Aging (PPM/1st Year): Ta=25C, Vdd=3.3V			±1	ppm
Static Discharge Voltage Mil-Std 883, method 3015	2000			V
Output Load: *				
CMOS, < 40 MHz			30	pF
CMOS, ≥ 40 MHz			15	pF
Output Level:	PECL/CMOS			
Packaging:	25 / Tube Tape & Reel			14 pin SMD

Notes: Recommended .01 µF bypass capacitor from Vcc to GND. Capacitor should be as close to oscillator as possible.
* LV PECL outputs require an external termination network

Cardinal Components, Inc.
155 Route 46 West
Wayne, NJ 07470
Rev: M-090414-14

TEL: (973)785-1333
E-MAIL: sales@cardinalxtal.com
WEB: http://www.cardinalxtal.com

Factory Prog. 4 Output PECL TCXO

Series CCT4E

Electrical Characteristics

	Description	Conditions	Min	Typ	Max	Unit
Ioh	Output High Current	Voh = (L)Vdd - 0.5, (L)Vdd = 3.3 V	12	24		mA
Iol	Output Low Current	Vol = .5, (L)Vdd = 3.3 V	12	24		mA
Vih	High Level Input Voltage	CMOS levels, % of Vdd	0.7			V
Vil	Low-Level Input Voltage	CMOS levels, % of Vdd			0.3	V
Iih	Input High Current	Vin = AVdd - 0.3 V		<1	10	µA
Iil	Input Low Current	Vin = + 0.3 V		<1	10	µA
Ioz	Output Leakage Current	tri-state outputs			10	µA
Idd	Total Power Supply Current	Example 1: 1 PECL output @155.52 MHz 1 CMOS output @19.44 MHz 1 CMOS output @38.88 MHz Example 2: 1 PECL output @400 MHz 1 CMOS output @106.25 MHz 1 CMOS output @53.125 MHz		26 48		mA mA
Idds	Shutdown Power Supply Curr	Shutdown active		5	20	µA

Output Clock Switching Characteristics

	Description	Conditions	Min	Typ	Max	Unit
1/t1	Output Frequency	Clock output limit, CMOS, Commercial Clock output limit, PECL, Commercial	0.2 100		200 400	MHz MHz
t3	Rising Edge Slew Rate	Output clock rise time, 20% – 80% Vdd	0.75	1.4		nS
t4	Falling Edge Slew Rate	Output clock fall time, 20% – 80% Vdd	0.75	1.4		nS
t5	Output tri-state timing after SD/OE switches	Time for output to enter/leave tri-state mode		150	300	nS
t6	Clock Jitter measured at Vdd/2	Peak-to-Peak period jitter, CLK outputs		200		pS
v7	P+/P- Crossing Point	Crossing point ref. to Vdd/2, bal res. net	-0.2	0	0.2	V

TEST CIRCUIT

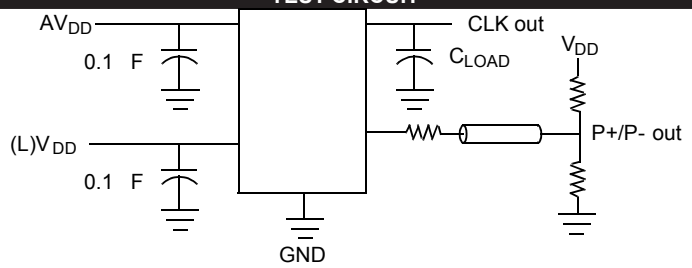

ALL OUTPUTS, DUTY CYCLE, RISE/FALL TIME

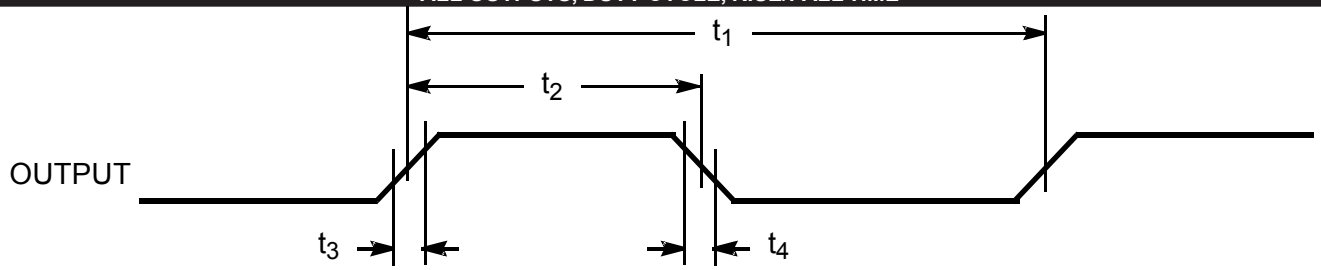

OUTPUT 3-STATE TIMING

CLK OUTPUT JITTER

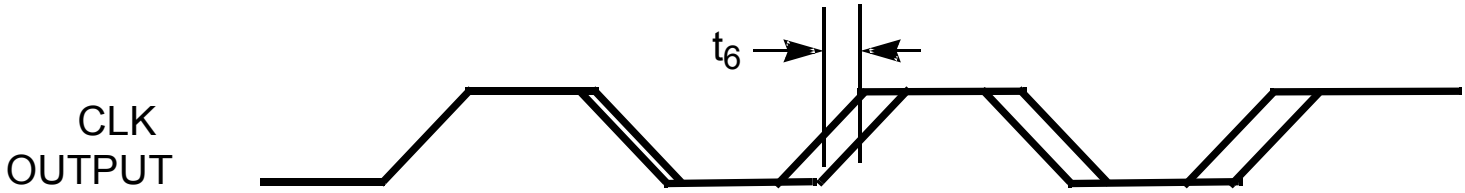

P+/P- CROSSING POINT AND JITTER

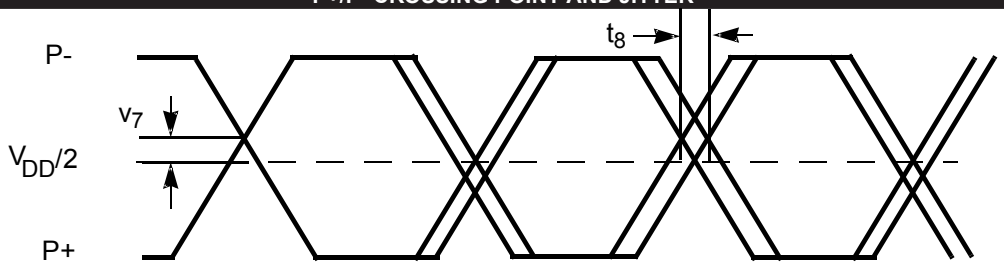

DIP

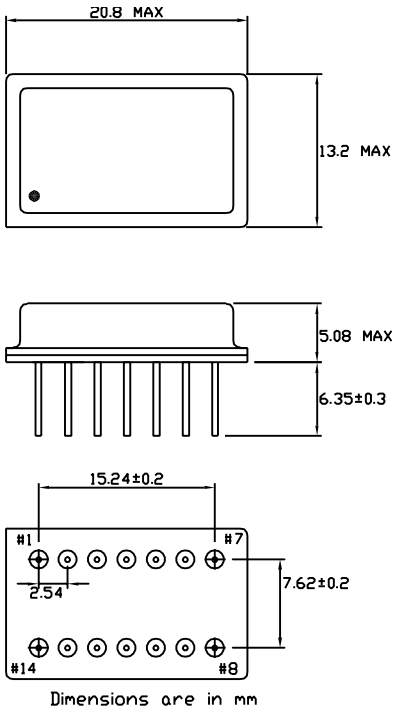

PIN FUNCTION
PIN 1 OE (CONNECT TO VDD)
PIN 2 SUSPEND (CONNECT TO GND)
PIN 3 VDD
PIN 4 FACTORY USE (MAKE NO CONNECTION)
PIN 5 CONNECT TO PIN 6
PIN 6 CONNECT TO PIN 5
PIN 7 GND
PIN 8 FACTORY USE (MAKE NO CONNECTION)
PIN 9 PECL - OUTPUT
PIN10 PECL + OUTPUT
PIN 11 FACTORY USE (MAKE NO CONNECTION)
PIN 12 FACTORY USE (MAKE NO CONNECTION)
PIN 13 CLK A OUTPUT
PIN 14 CLK B OUTPUT

SMD

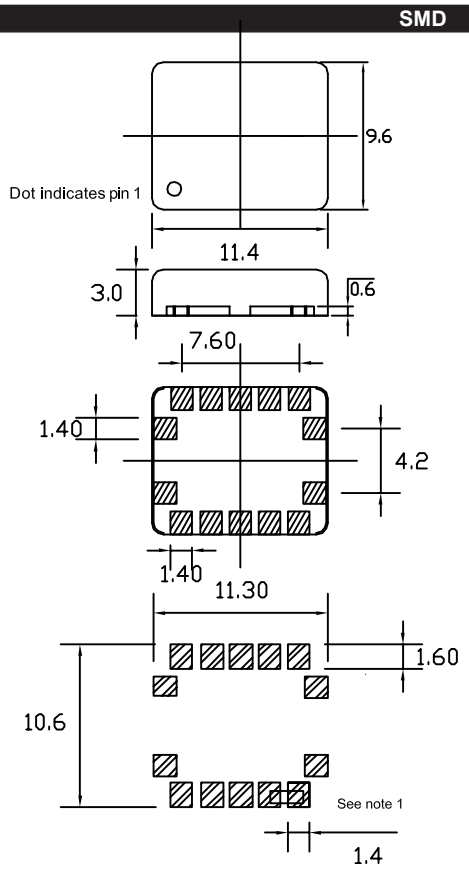

PIN FUNCTION
PIN 1 FACTORY USE (MAKE NO CONNECTION)
PIN 2 OE
PIN 3 VDD
PIN 4 FACTORY USE (MAKE NO CONNECTION)
PIN 5 CONNECT TO PIN 6
PIN 6 CONNECT TO PIN 5
PIN 7 GND
PIN 8 FACTORY USE (MAKE NO CONNECTION)
PIN 9 PECL - OUTPUT
PIN10 PECL + OUTPUT
PIN 11 FACTORY USE (MAKE NO CONNECTION)
PIN 12 FACTORY USE (MAKE NO CONNECTION)
PIN 13 CLK A OUTPUT
PIN 14 CLK B OUTPUT

Dimensions in mm
Recommended solder pad layout

Note1:
For proper operation pin 5 must be connected to pin 6

Cardinal Components, Inc.
155 Route 46 West
Wayne, NJ 07470
Rev: M-090414-14

TEL: (973)785-1333
E-MAIL: sales@cardinalxtal.com
WEB: http://www.cardinalxtal.com

Factory Prog. 5 Output PECL TCXO

- *Full Custom Multi-Frequency Programmable Osc*
- *Reduced EMI by turning off unused output*
- *Factory Programmable*
- *Differential PECL Output*
- *Industry-standard packaging saves on board space*
- *Mult. outputs 1 pkg vs. mult. osc & assoc. comp.*
- *Performs well under all conditions*

Applications

- *High-end multimedia*
- *Communications*
- *Industrial*
- *A/D converters*
- *Consumer Applications*
- *Low tolerance applications*
- *Low-power applications*

Series CCT5E

Pb RoHS COMPLIANT 2002 / 95 / EC

Part Numbering Example: CCT5E 1A 200.0 - 150.0 / 125.0 / 100.0

CCT5E	1A	200	150	125	100
SERIES	PACKAGE STYLE	FREQUENCY P/P-	FREQUENCY A	FREQUENCY B	FREQUENCY C
	1A=14 pin dip 9=9.6x11.4 SMD	100-400 MHz PECL	0.2 - 200 MHz	0.2 - 200 MHz	0.2 - 200 MHz

Specifications:	Min	Typ	Max	Unit
Frequency Range:				
Output PECL +	100		400	MHz
Output PECL -	100		400	MHz
Output A CMOS	0.2		200	MHz
Output B CMOS	0.2		200	MHz
Output C CMOS	0.2		200	MHz
Available Stability Options:	-2.5		2.5	ppm
Supply Voltage:	3.135	3.3	3.465	V
Operating Temperature Range Options:	-40		85	°C
Storage Temperature:	-55		125	°C
Duty Cycle:	40 45		60 55	% %
Start-Up Time:		3	10	mS
Aging (PPM/1st Year): Ta=25C, Vdd=3.3V			±1	ppm
Static Discharge Voltage Mil-Std 883, method 3015	2000			V
Output Load: *				
CMOS, < 40 MHz			30	pF
CMOS, ≥ 40 MHz			15	pF
Output Level:	PECL/CMOS			
Packaging:	25 / Tube Tape & Reel			14 pin SMD

Notes: Recommended .01 µF bypass capacitor from Vcc to GND. Capacitor should be as close to oscillator as possible.
* LV PECL outputs require an external termination network

Cardinal Components, Inc.
155 Route 46 West
Wayne, NJ 07470
Rev: M-090414-14

TEL: (973)785-1333
E-MAIL: sales@cardinalxtal.com
WEB: http://www.cardinalxtal.com

Factory Prog. 5 Output PECL TCXO

Series CCT5E

Electrical Characteristics

	Description	Conditions	Min	Typ	Max	Unit
Ioh	Output High Current	Voh = (L)Vdd - 0.5, (L)Vdd = 3.3 V	12	24		mA
Iol	Output Low Current	Vol = .5, (L)Vdd = 3.3 V	12	24		mA
Vih	High Level Input Voltage	CMOS levels, % of Vdd	0.7			V
Vil	Low-Level Input Voltage	CMOS levels, % of Vdd			0.3	V
Iih	Input High Current	Vin = AVdd - 0.3 V		<1	10	µA
Iil	Input Low Current	Vin = + 0.3 V		<1	10	µA
Ioz	Output Leakage Current	tri-state outputs			10	µA
Idd	Total Power Supply Current	Example 1: 1 PECL output @155.52 MHz 1 CMOS output @19.44 MHz 1 CMOS output @38.88 MHz 1 CMOS output @77.76 MHz Example 2: 1 PECL output @400 MHz 1 CMOS output @106.25 MHz 1 CMOS output @200 MHz 1 CMOS output @100 MHz		29 59		mA mA
Idds	Shutdown Power Supply Curr	Shutdown active		5	20	µA

Output Clock Switching Characteristics

	Description	Conditions	Min	Typ	Max	Unit
1/t1	Output Frequency	Clock output limit, CMOS, Commercial Clock output limit, PECL, Commercial	0.2 100		200 400	MHz MHz
t3	Rising Edge Slew Rate	Output clock rise time, 20% – 80% Vdd	0.75	1.4		nS
t4	Falling Edge Slew Rate	Output clock fall time, 20% – 80% Vdd	0.75	1.4		nS
t5	Output tri-state timing after SD/OE switches	Time for output to enter/leave tri-state mode		150	300	nS
t6	Clock Jitter measured at Vdd/2	Peak-to-Peak period jitter, CLK outputs		200		pS
v7	P+/P- Crossing Point	Crossing point ref. to Vdd/2, bal res. net	-0.2	0	0.2	V

TEST CIRCUIT

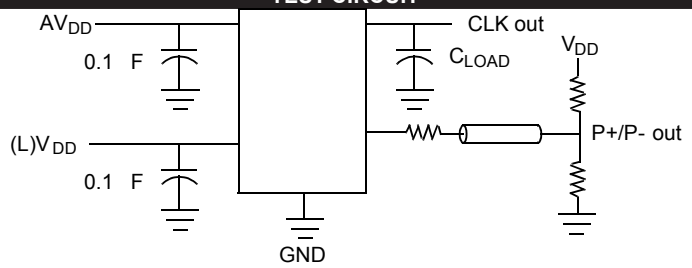

ALL OUTPUTS, DUTY CYCLE, RISE/FALL TIME

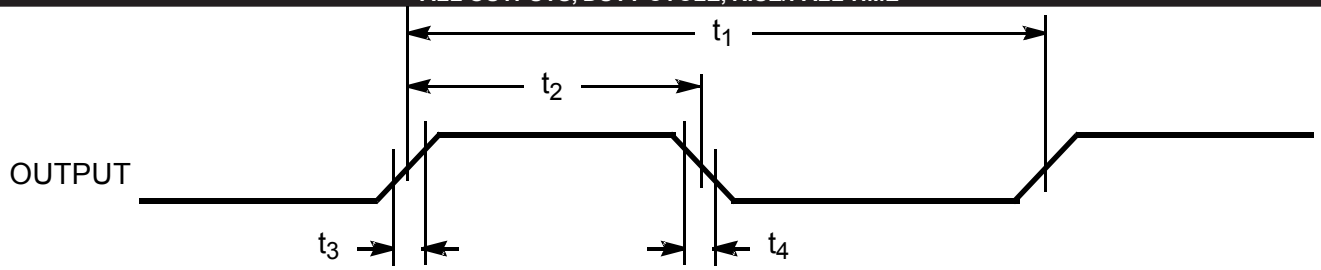

OUTPUT 3-STATE TIMING

CLK OUTPUT JITTER

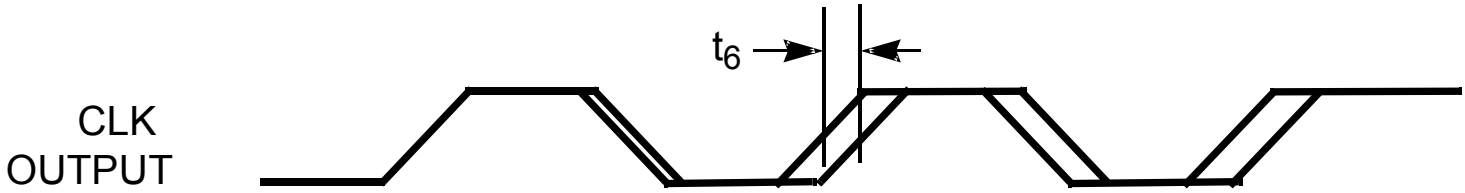

P+/P- CROSSING POINT AND JITTER

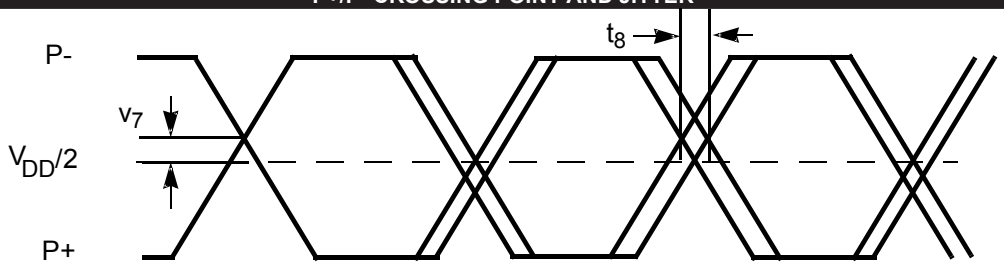

DIP

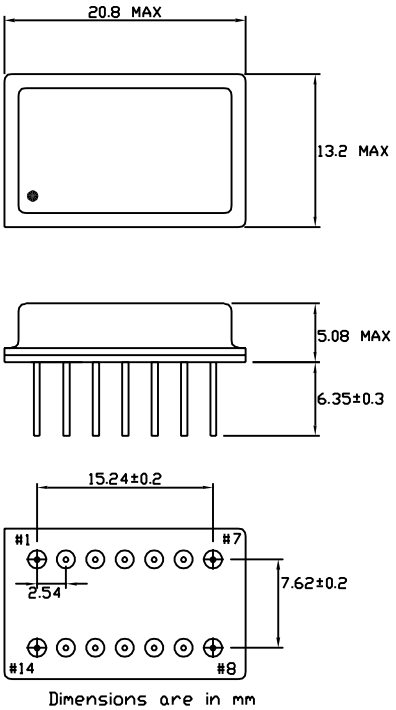

PIN FUNCTION
PIN 1 OE (CONNECT TO VDD)
PIN 2 SUSPEND (CONNECT TO GND)
PIN 3 VDD
PIN 4 CLK C OUTPUT
PIN 5 CONNECT TO PIN 6
PIN 6 CONNECT TO PIN 5
PIN 7 GND
PIN 8 FACTORY USE (MAKE NO CONNECTION)
PIN 9 PECL - OUTPUT
PIN10 PECL + OUTPUT
PIN 11 FACTORY USE (MAKE NO CONNECTION)
PIN 12 FACTORY USE (MAKE NO CONNECTION)
PIN 13 CLK A OUTPUT
PIN 14 CLK B OUTPUT

SMD

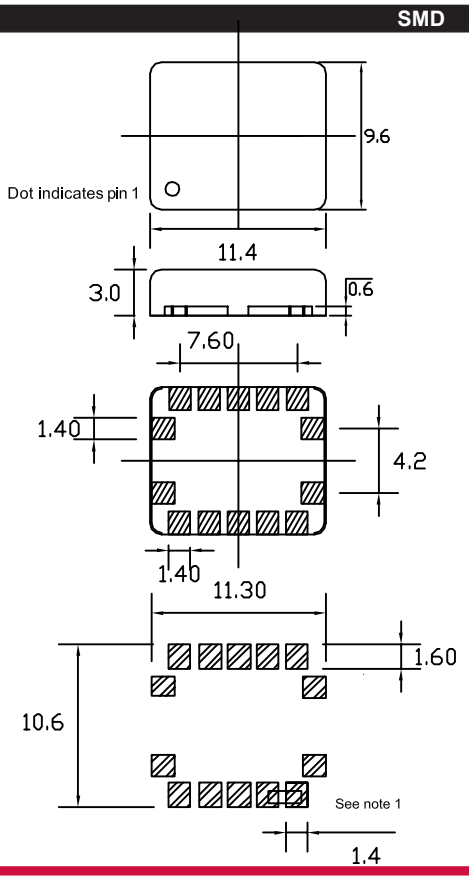

PIN FUNCTION
PIN 1 FACTORY USE (MAKE NO CONNECTION)
PIN 2 OE
PIN 3 VDD
PIN 4 CLK C OUTPUT
PIN 5 CONNECT TO PIN 6
PIN 6 CONNECT TO PIN 5
PIN 7 GND
PIN 8 FACTORY USE (MAKE NO CONNECTION)
PIN 9 PECL - OUTPUT
PIN10 PECL + OUTPUT
PIN 11 FACTORY USE (MAKE NO CONNECTION)
PIN 12 FACTORY USE (MAKE NO CONNECTION)
PIN 13 CLK A OUTPUT
PIN 14 CLK B OUTPUT

Dimensions in mm
Recommended solder pad layout

Note1:
For proper operation pin 5 must be connected to pin 6

Cardinal Components, Inc.
155 Route 46 West
Wayne, NJ 07470
Rev: M-090414-14

TEL: (973)785-1333
E-MAIL: sales@cardinalxtal.com
WEB: http://www.cardinalxtal.com

Factory Prog. 6 Output PECL TCXO

- *Full Custom Multi-Frequency Programmable Osc*
- *Reduced EMI by turning off unused output*
- *Factory Programmable*
- *Differential PECL Output*
- *Industry-standard packaging saves on board space*
- *Mult. outputs 1 pkg vs. mult. osc & assoc. comp.*
- *Performs well under all conditions*

Applications

- *High-end multimedia*
- *Communications*
- *Industrial*
- *A/D converters*
- *Consumer Applications*
- *Low tolerance applications*
- *Low-power applications*

Series CCT6E

Pb RoHS COMPLIANT 2002 / 95 / EC

Part Numbering Example: CCT6E 1A 200.0 - 150.0 / 125.0 / 100.0 / 12.0

CCT6E	1A	200	150	125	100	12
SERIES	PACKAGE STYLE	FREQUENCY P/P-	FREQUENCY A	FREQUENCY B	FREQUENCY C	FREQUENCY R
	1A=14 pin dip 9=9.6x11.4 SMD	100-400 MHz PECL	0.2 - 200 MHz	0.2 - 200 MHz	0.2 - 200 MHz	

Specifications:	Min	Typ	Max	Unit
Frequency Range:				
Output PECL +	100		400	MHz
Output PECL -	100		400	MHz
Output A CMOS	0.2		200	MHz
Output B CMOS	0.2		200	MHz
Output C CMOS	0.2		200	MHz
Output R Fixed		12		MHz
Available Stability Options:	-2.5		2.5	ppm
Supply Voltage:	3.135	3.3	3.465	V
Operating Temperature Range Options:	-40		85	°C
Storage Temperature:	-55		125	°C
Duty Cycle:	40 45		60 55	% %
Start-Up Time:		3	10	mS
Aging (PPM/1st Year): Ta=25C, Vdd=3.3V			±1	ppm
Static Discharge Voltage Mil-Std 883, method 3015	2000			V
Output Load: *				
CMOS, < 40 MHz			30	pF
CMOS, ≥ 40 MHz			15	pF
Output Level:	PCEL/CMOS			
Packaging:	25 / Tube Tape & Reel			14 pin SMD

Notes: Recommended .01 µF bypass capacitor from Vcc to GND. Capacitor should be as close to oscillator as possible.
* LV PECL outputs require an external termination network

Cardinal Components, Inc.
155 Route 46 West
Wayne, NJ 07470
Rev: M-090414-14

TEL: (973)785-1333
E-MAIL: sales@cardinalxtal.com
WEB: http://www.cardinalxtal.com

Factory Prog. 6 Output PECL TCXO

Series CCT6E

Electrical Characteristics

	Description	Conditions	Min	Typ	Max	Unit
Ioh	Output High Current	Voh = (L)Vdd - 0.5, (L)Vdd = 3.3 V	12	24		mA
Iol	Output Low Current	Vol = .5, (L)Vdd = 3.3 V	12	24		mA
Vih	High Level Input Voltage	CMOS levels, % of Vdd	0.7			V
Vil	Low-Level Input Voltage	CMOS levels, % of Vdd			0.3	V
Iih	Input High Current	Vin = AVdd - 0.3 V		<1	10	µA
Iil	Input Low Current	Vin = + 0.3 V		<1	10	µA
Ioz	Output Leakage Current	tri-state outputs			10	µA
Idd	Total Power Supply Current	Example 1: 1 PECL output @155.52 MHz 1 CMOS output @19.44 MHz 1 CMOS output @38.88 MHz 1 CMOS output @77.76 MHz 1 CMOS output @12 MHz Example 2: 1 PECL output @400 MHz 1 CMOS output @106.25 MHz 1 CMOS output @200 MHz 1 CMOS output @100 MHz 1 CMOS output @12 MHz		29 59		mA mA
Idds	Shutdown Power Supply Curr	Shutdown active		5	20	µA

Output Clock Switching Characteristics

	Description	Conditions	Min	Typ	Max	Unit
1/t1	Output Frequency	Clock output limit, CMOS, Commercial Clock output limit, PECL, Commercial	0.2 100		200 400	MHz MHz
t3	Rising Edge Slew Rate	Output clock rise time, 20% – 80% Vdd	0.75	1.4		nS
t4	Falling Edge Slew Rate	Output clock fall time, 20% – 80% Vdd	0.75	1.4		nS
t5	Output tri-state timing after SD/OE switches	Time for output to enter/leave tri-state mode		150	300	nS
t6	Clock Jitter measured at Vdd/2	Peak-to-Peak period jitter, CLK outputs		200		pS
v7	P+/P- Crossing Point	Crossing point ref. to Vdd/2, bal res. net	-0.2	0	0.2	V

TEST CIRCUIT

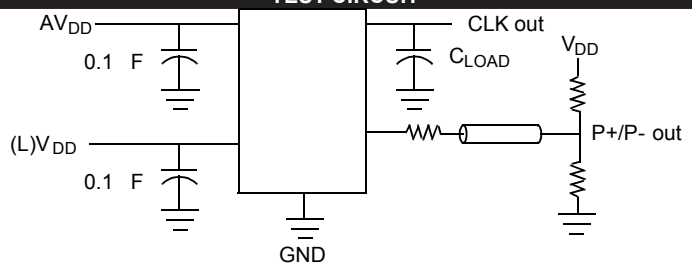

ALL OUTPUTS, DUTY CYCLE, RISE/FALL TIME

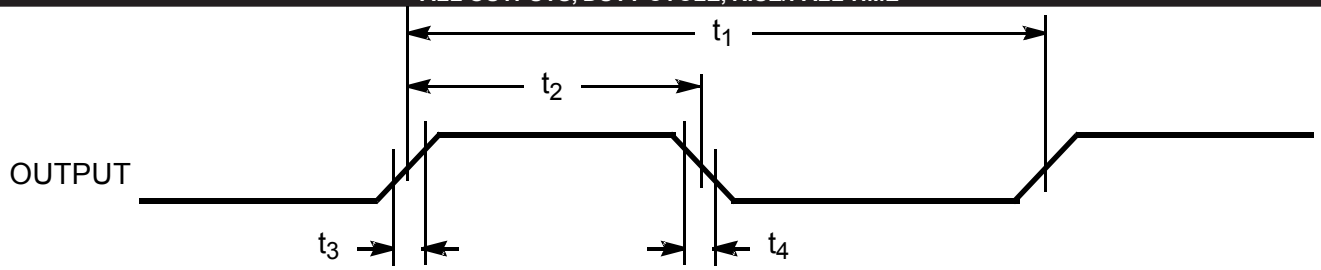

OUTPUT 3-STATE TIMING

CLK OUTPUT JITTER

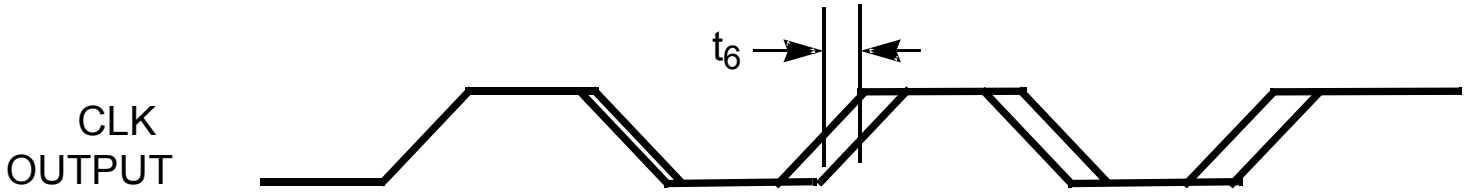

P+/P- CROSSING POINT AND JITTER

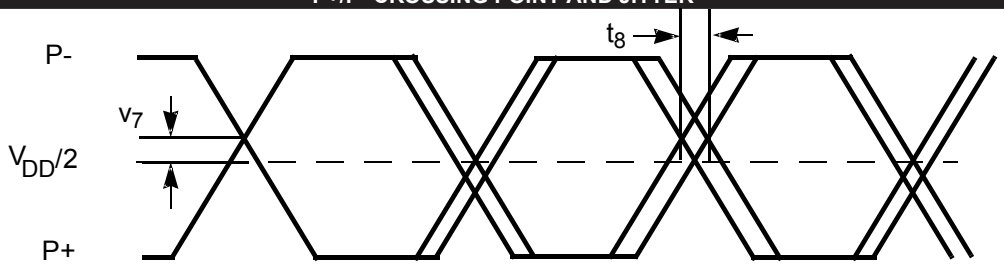

Cardinal Components, Inc.
155 Route 46 West
Wayne, NJ 07470
Rev: M-090414-14

TEL: (973)785-1333
E-MAIL: sales@cardinalxtal.com
WEB: http://www.cardinalxtal.com

DIP

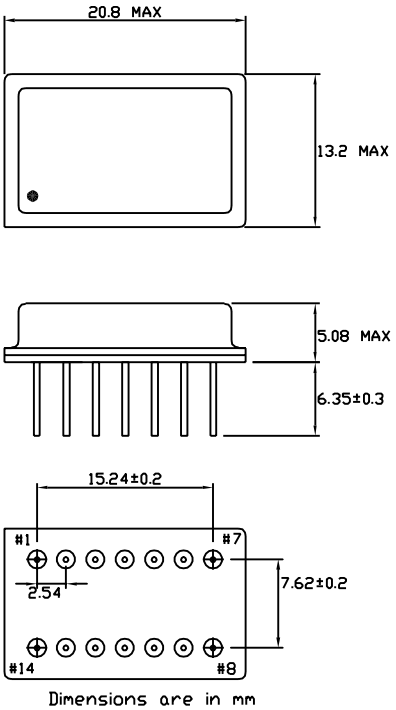

PIN FUNCTION
PIN 1 OE (CONNECT TO VDD)
PIN 2 SUSPEND (CONNECT TO GND)
PIN 3 VDD
PIN 4 CLK C OUTPUT
PIN 5 CONNECT TO PIN 6
PIN 6 CONNECT TO PIN 5
PIN 7 GND
PIN 8 12 MHz REF CLOCK OUTPUT
PIN 9 PECL - OUTPUT
PIN10 PECL + OUTPUT
PIN 11 FACTORY USE (MAKE NO CONNECTION)
PIN 12 FACTORY USE (MAKE NO CONNECTION)
PIN 13 CLK A OUTPUT
PIN 14 CLK B OUTPUT

SMD

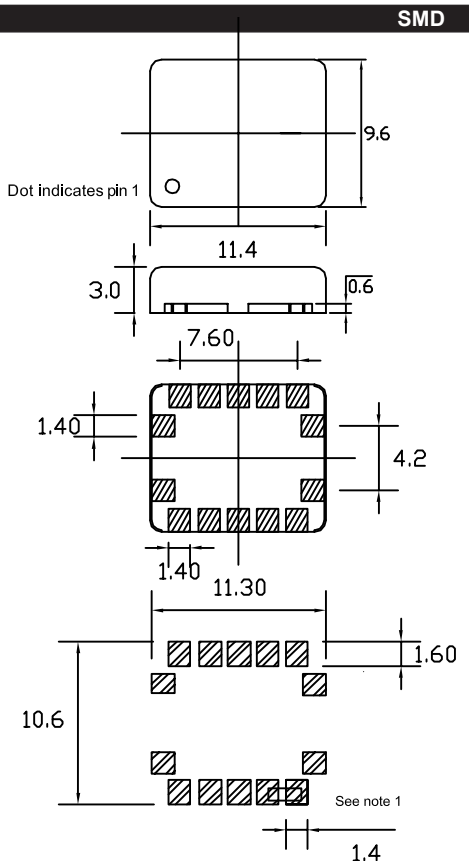

PIN FUNCTION
PIN 1 FACTORY USE (MAKE NO CONNECTION)
PIN 2 OE
PIN 3 VDD
PIN 4 CLK C OUTPUT
PIN 5 CONNECT TO PIN 6
PIN 6 CONNECT TO PIN 5
PIN 7 GND
PIN 8 12 MHz REF CLOCK OUTPUT
PIN 9 PECL - OUTPUT
PIN10 PECL + OUTPUT
PIN 11 FACTORY USE (MAKE NO CONNECTION)
PIN 12 FACTORY USE (MAKE NO CONNECTION)
PIN 13 CLK A OUTPUT
PIN 14 CLK B OUTPUT

Dimensions in mm
Recommended solder pad layout

Note1:
For proper operation pin 5 must be connected to pin 6

Cardinal Components, Inc.
155 Route 46 West
Wayne, NJ 07470
Rev: M-090414-14

TEL: (973)785-1333
E-MAIL: sales@cardinalxtal.com
WEB: http://www.cardinalxtal.com

Re-Configurable 4 Output PECL Oscillator

Series CCE4RE

- *Fixed & Re-Configurable Multi-Frequency Oscillator*
- *Intuitive software and I²C interface*
- *Easily update system*
- *Software flexible, quick upgrades and changes*
- *Industry-standard packaging saves on board space*
- *Mult. outputs 1 pkg vs. mult. osc & assoc. comp.*
- *Differential PECL Output*

Applications

- *High-end multimedia*
- *Communications*
- *Industrial*
- *A/D converters*
- *Consumer Applications*

Pb RoHS COMPLIANT 2002 / 95 / EC

Part Numbering Example: CCE4RE 1A 200.0 - 150.0 / 125.0

CCE4RE	1A	200	150	125
SERIES	PACKAGE STYLE	FREQUENCY P/P-	FREQUENCY A	FREQUENCY B
	1A=14 pin dip 9=9.6x11.4 SMD	100-400 MHz PECL	0.2 - 200 MHz	0.2 - 200 MHz

Specifications:	Min	Typ	Max	Unit
Frequency Range:				
Output PECL +	100		400	MHz
Output PECL -	100		400	MHz
Output A CMOS	0.2		200	MHz
Output B CMOS	0.2		200	MHz
Available Stability Options:	-50		50	ppm
Supply Voltage:	3.135	3.3	3.465	V
Operating Temperature Range Options:	-40		85	°C
Storage Temperature:	-55		125	°C
Duty Cycle:	40 45		60 55	% %
Start-Up Time:		3	10	mS
Aging (PPM/1st Year): Ta=25C, Vdd=3.3V			±5	
Static Discharge Voltage Mil-Std 883, method 3015	2000			V
Output Load: *				
CMOS, < 40 MHz			30	pF
CMOS, ≥ 40 MHz			15	pF
Output Level:	PECL/CMOS			
Packaging:	25 / Tube Tape & Reel			14 pin SMD

Notes: Recommended .01 µF bypass capacitor from Vcc to GND. Capacitor should be as close to oscillator as possible.
* LV PECL outputs require an external termination network

Cardinal Components, Inc.
155 Route 46 West
Wayne, NJ 07470
Rev: M-090414-14

TEL: (973)785-1333
E-MAIL: sales@cardinalxtal.com
WEB: http://www.cardinalxtal.com

Re-Configurable 4 Output PECL Oscillator

Series CCE4RE

Electrical Characteristics

	Description	Conditions	Min	Typ	Max	Unit
Ioh	Output High Current	Voh = (L)Vdd - 0.5, (L)Vdd = 3.3 V	12	24		mA
Iol	Output Low Current	Vol = .5, (L)Vdd = 3.3 V	12	24		mA
Vih	High Level Input Voltage	CMOS levels, % of Vdd	0.7			V
Vil	Low-Level Input Voltage	CMOS levels, % of Vdd			0.3	V
Iih	Input High Current	Vin = AVdd - 0.3 V		<1	10	µA
Iil	Input Low Current	Vin = + 0.3 V		<1	10	µA
Ioz	Output Leakage Current	tri-state outputs			10	µA
Idd	Total Power Supply Current	Example 1: 1 PECL output @155.52 MHz 1 CMOS output @19.44 MHz 1 CMOS output @38.88 MHz Example 2: 1 PECL output @400 MHz 1 CMOS output @106.25 MHz 1 CMOS output @53.125 MHz		26 48		mA mA
Idds	Shutdown Power Supply Curr	Shutdown active		5	20	µA

Output Clock Switching Characteristics

	Description	Conditions	Min	Typ	Max	Unit
1/t1	Output Frequency	Clock output limit, CMOS, Commercial Clock output limit, PECL, Commercial	0.2 100		200 400	MHz MHz
t3	Rising Edge Slew Rate	Output clock rise time, 20% – 80% Vdd	0.75	1.4		nS
t4	Falling Edge Slew Rate	Output clock fall time, 20% – 80% Vdd	0.75	1.4		nS
t5	Output tri-state timing after SD/OE switches	Time for output to enter/leave tri-state mode		150	300	nS
t6	Clock Jitter measured at Vdd/2	Peak-to-Peak period jitter, CLK outputs		200		pS
v7	P+/P- Crossing Point	Crossing point ref. to Vdd/2, bal res. net	-0.2	0	0.2	V
	Frequency Switch Time	Change time		2	4	ms

Cardinal Components, Inc.
155 Route 46 West
Wayne, NJ 07470

TEL: (973)785-1333
E-MAIL: sales@cardinalxtal.com
WEB: http://www.cardinalxtal.com

TEST CIRCUIT

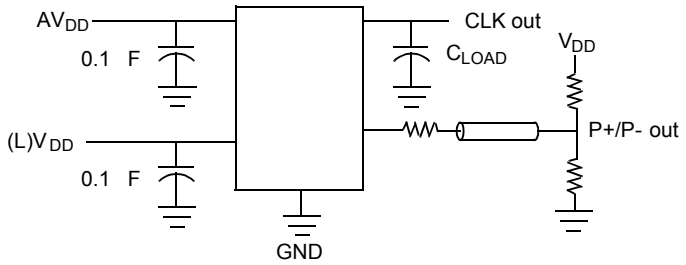

ALL OUTPUTS, DUTY CYCLE, RISE/FALL TIME

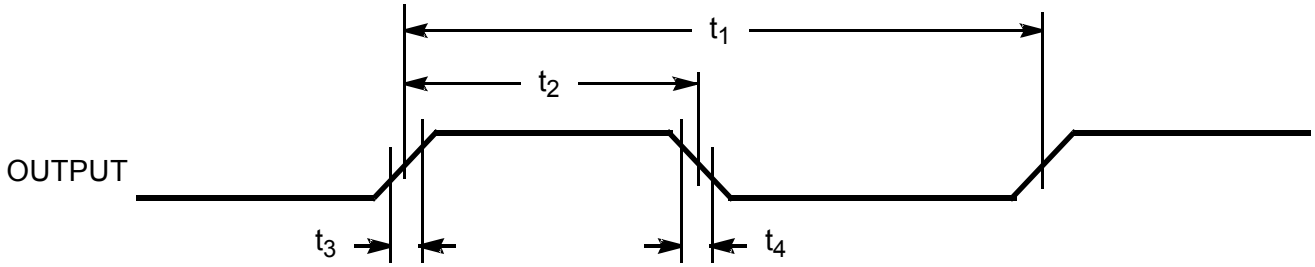

OUTPUT TRI-STATE TIMING

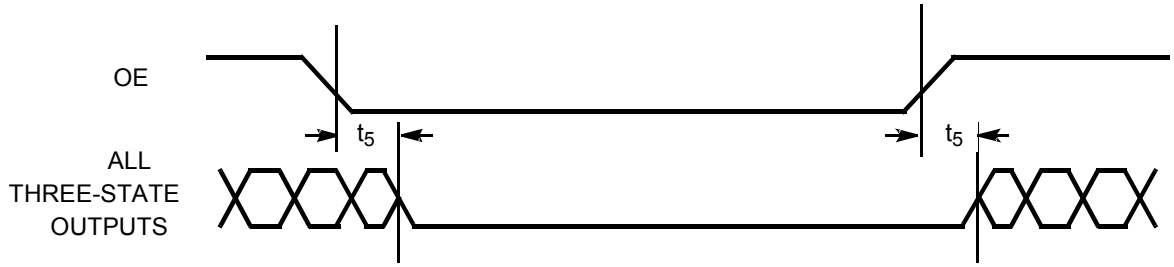

CLK OUTPUT JITTER

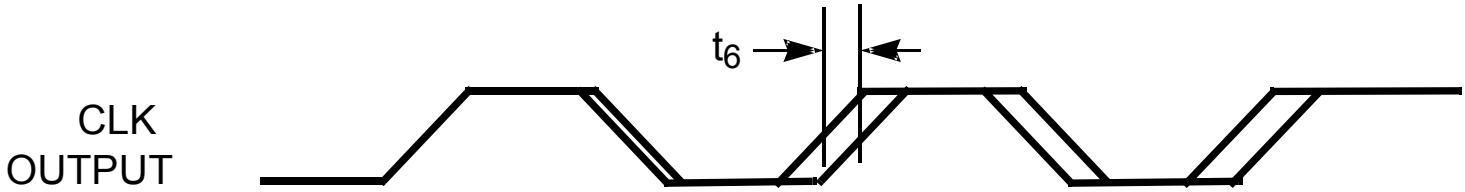

P+/P- CROSSING POINT AND JITTER

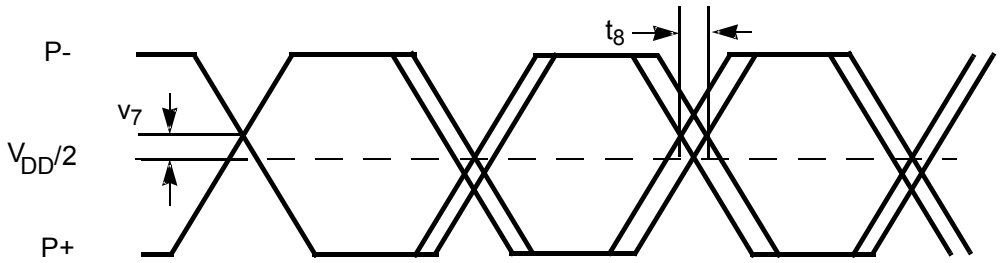

CPU FREQUENCY CHANGE

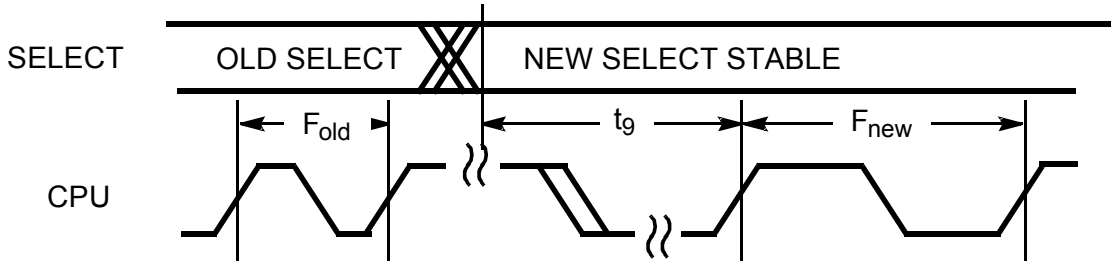

Cardinal Components, Inc.
155 Route 46 West
Wayne, NJ 07470

TEL: (973)785-1333
E-MAIL: sales@cardinalxtal.com
WEB: http://www.cardinalxtal.com

DIP

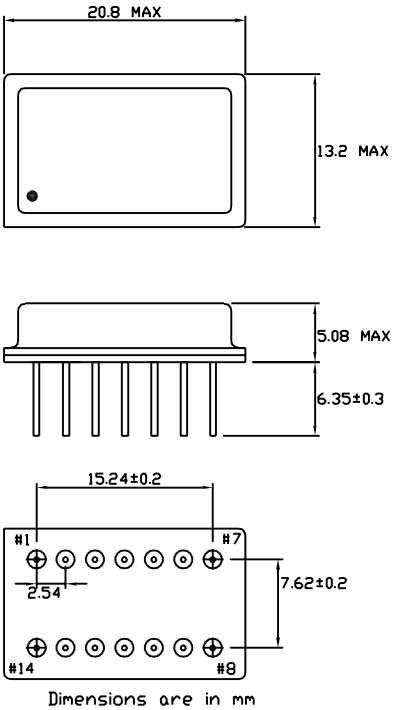

PIN FUNCTION
PIN 1 OE (CONNECT TO VDD)
PIN 2 SUSPEND (CONNECT TO GND)
PIN 3 VDD
PIN 4 FACTORY USE (MAKE NO CONNECTION)
PIN 5 CONNECT TO PIN 6
PIN 6 CONNECT TO PIN 5
PIN 7 GND
PIN 8 FACTORY USE (MAKE NO CONNECTION)
PIN 9 PECL - OUTPUT
PIN10 PECL + OUTPUT
PIN 11 SDAT
PIN 12 SCLK
PIN 13 CLK A OUTPUT
PIN 14 CLK B OUTPUT

SMD

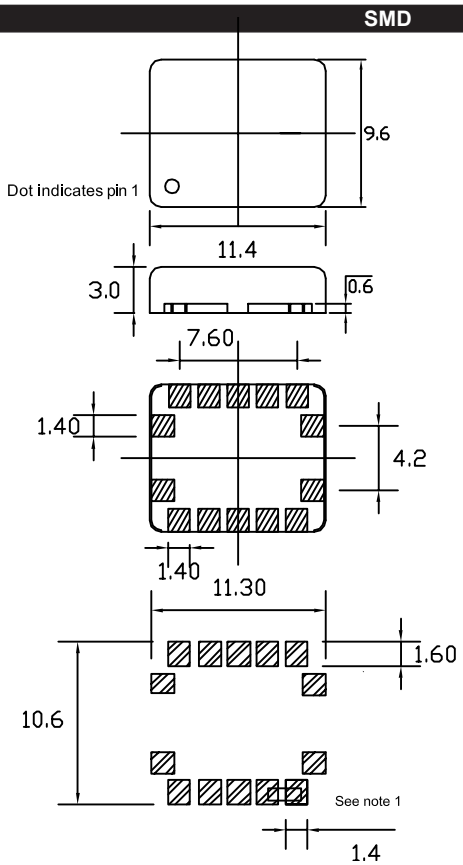

PIN FUNCTION
PIN 1 FACTORY USE (MAKE NO CONNECTION)
PIN 2 OE
PIN 3 VDD
PIN 4 FACTORY USE (MAKE NO CONNECTION)
PIN 5 CONNECT TO PIN 6
PIN 6 CONNECT TO PIN 5
PIN 7 GND
PIN 8 FACTORY USE (MAKE NO CONNECTION)
PIN 9 PECL - OUTPUT
PIN10 PECL + OUTPUT
PIN 11 SCLK
PIN 12 SDAT
PIN 13 CLK A OUTPUT
PIN 14 CLK B OUTPUT

Dimensions in mm
Recommended solder pad layout

Note1:
For proper operation pin 5 must be connected to pin 6

Cardinal Components, Inc.
155 Route 46 West
Wayne, NJ 07470
Rev: M-090414-14

TEL: (973)785-1333
E-MAIL: sales@cardinalxtal.com
WEB: http://www.cardinalxtal.com

Flash Programmability:

Non-Volatile programming enables easy customization, ultrafast turnaround, performance tweaking, design timing margin testing, inventory control, lower part count, and more secure product supply. In addition, any part in the family can also be programmed multiple times, which reduces programming errors and provides an easy upgrade path for existing designs.

Feature of the I^2C-bus:

- Only two bus lines are required; a serial data line (SDA) and a serial clock line (SCL)
- Each device connected to the bus is software addressable by a unique address and simple master/slave relationship exist at all times; master can operate as a master- transmitter or as master-receivers
- It's a true multi-master bus including collision detection and arbitration to prevent data corruption if two or more master simultaneously initiate data transfer
- Serial 8-bit oriented, bidirectional data transfers can be made at up to 100 Kbit/s in the standard mode, up to 400 kbit/s in the fast-mode, or up to 3.4 Mbit/s in the High-speed mode

Designer Benefits:

I^2C bus compatible In Circuit Reconfigurable Oscillator "ICRO" allow a system design to rapidly progress directly from a functional block diagram to a prototype. Moreover, since they 'clip' directly onto the I^2C bus without any additional external interfacing, they allow a prototype system to be modified or upgraded simply by 'clipping' or 'unclipping' ICRO to or from the bus.

Here are some of the feature of I^2C- bus compatible ICRO which are particularly attractive to designer

- Functional blocks on the block diagram correspond with the actual ICRO designs proceed rapidly from block diagram to final schematic
- No need to design bus interfaces because the I^2C-bus interface is already integrated on the ICRO
- Integrated addressing and data-transfer protocol allow systems to be completely software-defined
- The same ICRO types can often be used in many different applications
- Design-time reduces as designers quickly become familiar with the frequently used functional book represented by I^2C-bus compatible and ICRO
- ICRO can be added to or remove from system without affecting any other circuits on the bus

In addition to these advantages, the CMOS ICRO in the I^2C-bus compatible range offer designers special feature which are particularly attractive for portable equipment and battery-backed systems.

They All Have:

- Extremely low current consumption
- High Noise immunity
- Wide operating temperature range

Manufacturer Benefits

I^2C-bus compatible ICRO don't only assist designer, they also give a wider range of benefits to the equipment manufacturer because:

- The simple 2-wire serial I^2C bus minimizes interconnections so ICRO have fewer pins and there are not so many PCB tracks; result- smaller and less expensive PCBs
- The completely integrated I^2C-bus protocol eliminates the need for address decoders and other 'glue logic'
- The multi-master capability of the I^2C-bus allows rapid testing and alignment of end-user equipment via external connections to an assembly line
- I^2C-bus handbook, I^2C Website: www.semiconductors.philips.com/I2C

Re-Configurable 5 Output PECL Oscillator

Series CCE5RE

- *Fixed & Re-Configurable Multi-Frequency Oscillator*
- *Intuitive software and I²C interface*
- *Easily update system*
- *Software flexible, quick upgrades and changes*
- *Industry-standard packaging saves on board space*
- *Mult. outputs 1 pkg vs. mult. osc & assoc. comp.*
- *Differential PECL Output*

Applications

- *High-end multimedia*
- *Communications*
- *Industrial*
- *A/D converters*
- *Consumer Applications*

Pb RoHS COMPLIANT 2002 / 95 / EC

Part Numbering Example: CCE5RE 1A 200.0 - 150.0 / 125.0 / 100.0

CCE5RE	1A	200	150	125	100
SERIES	PACKAGE STYLE	FREQUENCY P/P-	FREQUENCY A	FREQUENCY B	FREQUENCY C
	1A=14 pin dip 9=9.6x11.4 SMD	100-400 MHz PECL	0.2 - 200 MHz	0.2 - 200 MHz	0.2 - 200 MHz

Specifications:	Min	Typ	Max	Unit
Frequency Range: Output PECL + Output PECL - Output A CMOS Output B CMOS Output C CMOS	 100 100 0.2 0.2 0.2		 400 400 200 200 200	 MHz MHz MHz MHz MHz
Available Stability Options:	-50		50	ppm
Supply Voltage:	3.135	3.3	3.465	V
Operating Temperature Range Options:	-40		85	°C
Storage Temperature:	-55		125	°C
Duty Cycle:	40 45		60 55	% %
Start-Up Time:		3	10	mS
Aging (PPM/1st Year): Ta=25C, Vdd=3.3V			±5	
Static Discharge Voltage Mil-Std 883, method 3015	2000			V
Output Load: * CMOS, < 40 MHz CMOS, ≥ 40 MHz			 30 15	 pF pF
Output Level:	PECL/CMOS			
Packaging:	25 / Tube Tape & Reel			14 pin SMD

Notes: Recommended .01 µF bypass capacitor from Vcc to GND. Capacitor should be as close to oscillator as possible.

Cardinal Components, Inc.
155 Route 46 West
Wayne, NJ 07470
Rev: M-090414-14

TEL: (973)785-1333
E-MAIL: sales@cardinalxtal.com
WEB: http://www.cardinalxtal.com

Re-Configurable 5 Output PECL Oscillator

Series CCE5RE

Electrical Characteristics

	Description	Conditions	Min	Typ	Max	Unit
Ioh	Output High Current	Voh = (L)Vdd - 0.5, (L)Vdd = 3.3 V	12	24		mA
Iol	Output Low Current	Vol = .5, (L)Vdd = 3.3 V	12	24		mA
Vih	High Level Input Voltage	CMOS levels, % of Vdd	0.7			V
Vil	Low-Level Input Voltage	CMOS levels, % of Vdd			0.3	V
Iih	Input High Current	Vin = AVdd - 0.3 V		<1	10	µA
Iil	Input Low Current	Vin = + 0.3 V		<1	10	µA
Ioz	Output Leakage Current	tri-state outputs			10	µA
Idd	Total Power Supply Current	Example 1: 1 PECL output @155.52 MHz 1 CMOS output @19.44 MHz 1 CMOS output @38.88 MHz 1 CMOS output @77.76 MHz Example 2: 1 PECL output @400 MHz 1 CMOS output @106.25 MHz 1 CMOS output @200 MHz 1 CMOS output @100 MHz		29 59		mA mA
Idds	Shutdown Power Supply Curr	Shutdown active		5	20	µA

Output Clock Switching Characteristics

	Description	Conditions	Min	Typ	Max	Unit
1/t1	Output Frequency	Clock output limit, CMOS, Commercial Clock output limit, PECL, Commercial	0.2 100		200 400	MHz MHz
t3	Rising Edge Slew Rate	Output clock rise time, 20% – 80% Vdd	0.75	1.4		nS
t4	Falling Edge Slew Rate	Output clock fall time, 20% – 80% Vdd	0.75	1.4		nS
t5	Output tri-state timing after SD/OE switches	Time for output to enter/leave tri-state mode		150	300	nS
t6	Clock Jitter measured at Vdd/2	Peak-to-Peak period jitter, CLK outputs		200		pS
v7	P+/P- Crossing Point	Crossing point ref. to Vdd/2, bal res. net	-0.2	0	0.2	V
	Frequency Switch Time	Change time		2	4	ms

Cardinal Components, Inc.
155 Route 46 West
Wayne, NJ 07470

TEL: (973)785-1333
E-MAIL: sales@cardinalxtal.com
WEB: http://www.cardinalxtal.com

TEST CIRCUIT

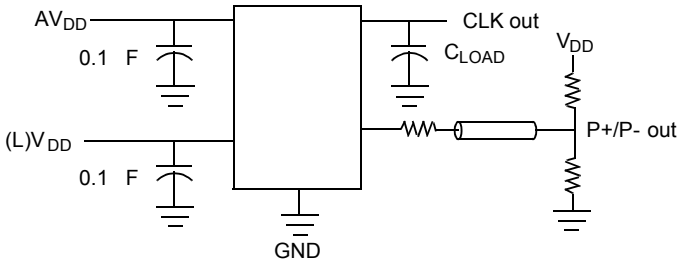

ALL OUTPUTS, DUTY CYCLE, RISE/FALL TIME

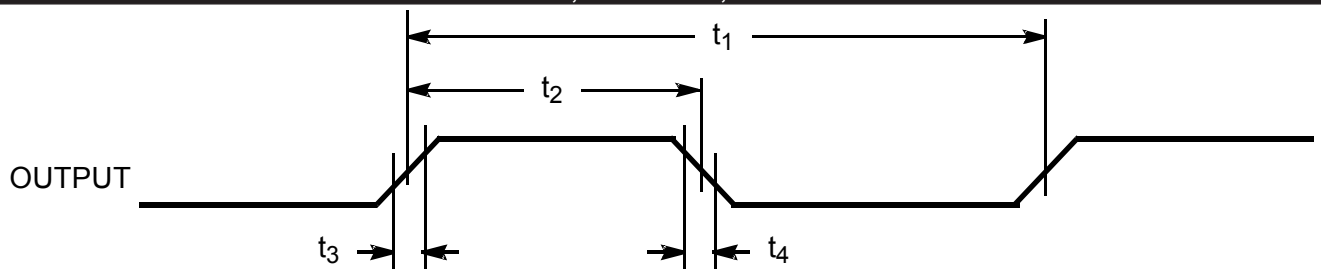

OUTPUT TRI-STATE TIMING

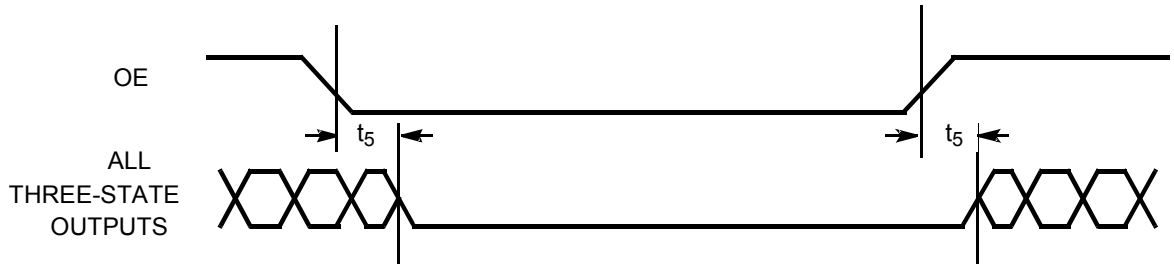

CLK OUTPUT JITTER

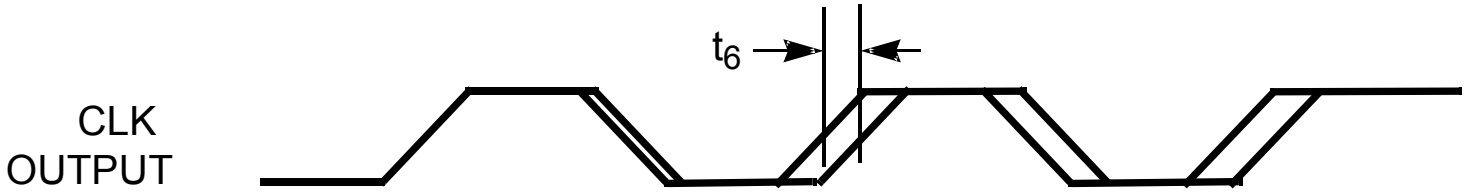

P+/P- CROSSING POINT AND JITTER

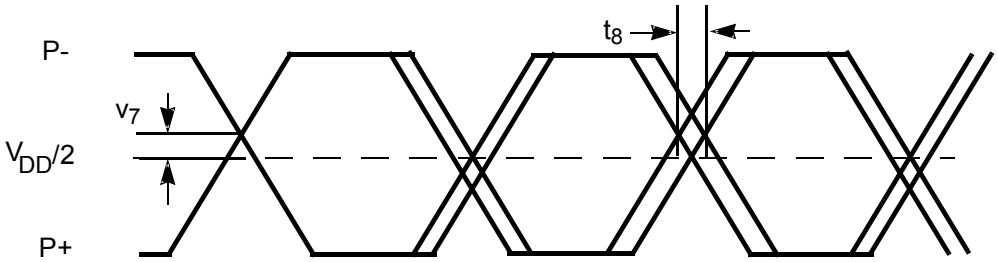

CPU FREQUENCY CHANGE

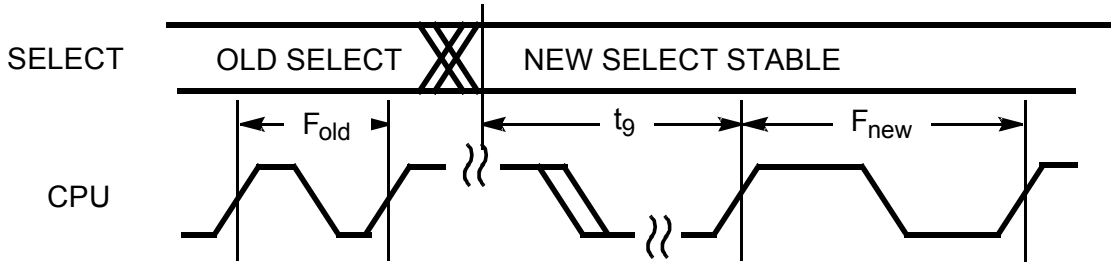

DIP

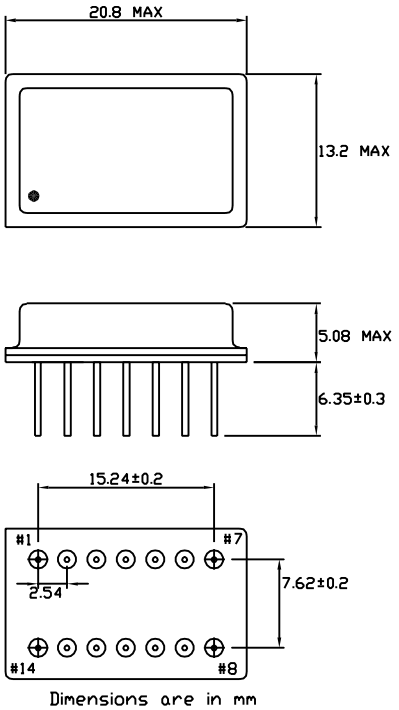

PIN FUNCTION
PIN 1 OE (CONNECT TO VDD)
PIN 2 SUSPEND (CONNECT TO GND)
PIN 3 VDD
PIN 4 CLK C OUTPUT
PIN 5 CONNECT TO PIN 6
PIN 6 CONNECT TO PIN 5
PIN 7 GND
PIN 8 FACTORY USE (MAKE NO CONNECTION)
PIN 9 PECL - OUTPUT
PIN10 PECL + OUTPUT
PIN 11 SDAT
PIN 12 SCLK
PIN 13 CLK A OUTPUT
PIN 14 CLK B OUTPUT

SMD

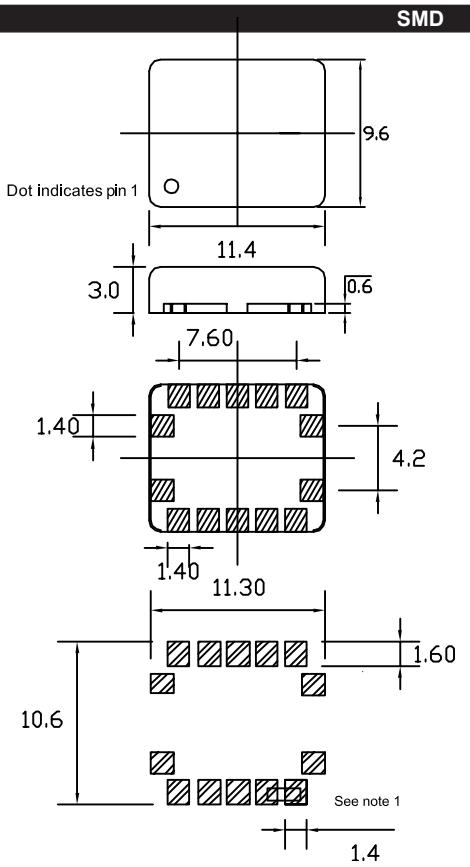

PIN FUNCTION
PIN 1 FACTORY USE (MAKE NO CONNECTION)
PIN 2 OE
PIN 3 VDD
PIN 4 CLK C OUTPUT
PIN 5 CONNECT TO PIN 6
PIN 6 CONNECT TO PIN 5
PIN 7 GND
PIN 8 FACTORY USE (MAKE NO CONNECTION)
PIN 9 PECL - OUTPUT
PIN10 PECL + OUTPUT
PIN 11 SCLK
PIN 12 SDAT
PIN 13 CLK A OUTPUT
PIN 14 CLK B OUTPUT

Dimensions in mm
Recommended solder pad layout

Note1:
For proper operation pin 5 must be connected to pin 6

Cardinal Components, Inc.
155 Route 46 West
Wayne, NJ 07470

TEL: (973)785-1333
E-MAIL: sales@cardinalxtal.com
WEB: http://www.cardinalxtal.com

Flash Programmability:

Non-Volatile programming enables easy customization, ultrafast turnaround, performance tweaking, design timing margin testing, inventory control, lower part count, and more secure product supply. In addition, any part in the family can also be programmed multiple times, which reduces programming errors and provides an easy upgrade path for existing designs.

Feature of the I^2C-bus:

- Only two bus lines are required; a serial data line (SDA) and a serial clock line (SCL)
- Each device connected to the bus is software addressable by a unique address and simple master/slave relationship exist at all times; master can operate as a master- transmitter or as master-receivers
- It's a true multi-master bus including collision detection and arbitration to prevent data corruption if two or more master simultaneously initiate data transfer
- Serial 8-bit oriented, bidirectional data transfers can be made at up to 100 Kbit/s in the standard mode, up to 400 kbit/s in the fast-mode, or up to 3.4 Mbit/s in the High-speed mode

Designer Benefits:

I^2C bus compatible In Circuit Reconfigurable Oscillator "ICRO" allow a system design to rapidly progress directly from a functional block diagram to a prototype. Moreover, since they 'clip' directly onto the I^2C bus without any additional external interfacing, they allow a prototype system to be modified or upgraded simply by 'clipping' or 'unclipping' ICRO to or from the bus.

Here are some of the feature of I^2C- bus compatible ICRO which are particularly attractive to designer

- Functional blocks on the block diagram correspond with the actual ICRO designs proceed rapidly from block diagram to final schematic
- No need to design bus interfaces because the I^2C-bus interface is already integrated on the ICRO
- Integrated addressing and data-transfer protocol allow systems to be completely software-defined
- The same ICRO types can often be used in many different applications
- Design-time reduces as designers quickly become familiar with the frequently used functional book represented by I^2C-bus compatible and ICRO
- ICRO can be added to or remove from system without affecting any other circuits on the bus

In addition to these advantages, the CMOS ICRO in the I^2C-bus compatible range offer designers special feature which are particularly attractive for portable equipment and battery-backed systems.

They All Have:

- Extremely low current consumption
- High Noise immunity
- Wide operating temperature range

Manufacturer Benefits

I^2C-bus compatible ICRO don't only assist designer, they also give a wider range of benefits to the equipment manufacturer because:

- The simple 2-wire serial I^2C bus minimizes interconnections so ICRO have fewer pins and there are not so many PCB tracks; result- smaller and less expensive PCBs
- The completely integrated I^2C-bus protocol eliminates the need for address decoders and other 'glue logic'
- The multi-master capability of the I^2C-bus allows rapid testing and alignment of end-user equipment via external connections to an assembly line
- I^2C-bus handbook, I^2C Website: www.semiconductors.philips.com/I2C

Re-Configurable 6 Output PECL Oscillator

Series CCE6RE

- *Fixed & Re-Configurable Multi-Frequency Oscillator*
- *Intuitive software and I²C interface*
- *Easily update system*
- *Software flexible, quick upgrades and changes*
- *Industry-standard packaging saves on board space*
- *Mult. outputs 1 pkg vs. mult. osc & assoc. comp.*
- *Differential PECL Output*

Applications

- *High-end multimedia*
- *Communications*
- *Industrial*
- *A/D converters*
- *Consumer Applications*

Pb RoHS COMPLIANT 2002 / 95 / EC

Part Numbering Example: CCE6RE 1A 200.0 - 150.0 / 125.0 / 100.0 / 12.0

CCE6RE	1A	200	150	125	100	12
SERIES	PACKAGE STYLE	FREQUENCY P/P-	FREQUENCY A	FREQUENCY B	FREQUENCY C	FREQUENCY R
	1A=14 pin dip 9=9.6x11.4 SMD	100-400 MHz PECL	0.2 - 200 MHz	0.2 - 200 MHz	0.2 - 200 MHz	

Specifications:	Min	Typ	Max	Unit
Frequency Range:				
Output PECL +	100		400	MHz
Output PECL -	100		400	MHz
Output A CMOS	0.2		200	MHz
Output B CMOS	0.2		200	MHz
Output C CMOS	0.2		200	MHz
Output R Fixed		12		MHz
Available Stability Options:	-50		50	ppm
Supply Voltage:	3.135	3.3	3.465	V
Operating Temperature Range Options:	-40		85	°C
Storage Temperature:	-55		125	°C
Duty Cycle:	40 45		60 55	% %
Start-Up Time:		3	10	mS
Aging (PPM/1st Year): Ta=25C, Vdd=3.3V			±5	
Static Discharge Voltage Mil-Std 883, method 3015	2000			V
Output Load: *				
CMOS, < 40 MHz			30	pF
CMOS, ≥ 40 MHz			15	pF
Output Level:	PCEL/CMOS			
Packaging:	25 / Tube Tape & Reel			14 pin SMD

Notes: Recommended .01 µF bypass capacitor from Vcc to GND. Capacitor should be as close to oscillator as possible.
* LV PECL outputs require an external termination network

Cardinal Components, Inc.
155 Route 46 West
Wayne, NJ 07470

TEL: (973)785-1333
E-MAIL: sales@cardinalxtal.com
WEB: http://www.cardinalxtal.com

Re-Configurable 6 Output PECL Oscillator

Series CCE6RE

Electrical Characteristics

	Description	Conditions	Min	Typ	Max	Unit
Ioh	Output High Current	Voh = (L)Vdd - 0.5, (L)Vdd = 3.3 V	12	24		mA
Iol	Output Low Current	Vol = .5, (L)Vdd = 3.3 V	12	24		mA
Vih	High Level Input Voltage	CMOS levels, % of Vdd	0.7			V
Vil	Low-Level Input Voltage	CMOS levels, % of Vdd			0.3	V
Iih	Input High Current	Vin = AVdd - 0.3 V		<1	10	µA
Iil	Input Low Current	Vin = + 0.3 V		<1	10	µA
Ioz	Output Leakage Current	tri-state outputs			10	µA
Idd	Total Power Supply Current	Example 1: 1 PECL output @155.52 MHz 1 CMOS output @19.44 MHz 1 CMOS output @38.88 MHz 1 CMOS output @77.76 MHz 1 CMOS output @12 MHz		29		mA
		Example 2: 1 PECL output @400 MHz 1 CMOS output @106.25 MHz 1 CMOS output @200 MHz 1 CMOS output @100 MHz 1 CMOS output @12 MHz		59		mA
Idds	Shutdown Power Supply Curr	Shutdown active		5	20	µA

Output Clock Switching Characteristics

	Description	Conditions	Min	Typ	Max	Unit
1/t1	Output Frequency	Clock output limit, CMOS, Commercial Clock output limit, PECL, Commercial	0.2 100		200 400	MHz MHz
t3	Rising Edge Slew Rate	Output clock rise time, 20% – 80% Vdd	0.75	1.4		nS
t4	Falling Edge Slew Rate	Output clock fall time, 20% – 80% Vdd	0.75	1.4		nS
t5	Output tri-state timing after SD/OE switches	Time for output to enter/leave tri-state mode		150	300	nS
t6	Clock Jitter measured at Vdd/2	Peak-to-Peak period jitter, CLK outputs		200		pS
v7	P+/P- Crossing Point	Crossing point ref. to Vdd/2, bal res. net	-0.2	0	0.2	V
	Frequency Switch Time	Change time		2	4	ms

TEST CIRCUIT

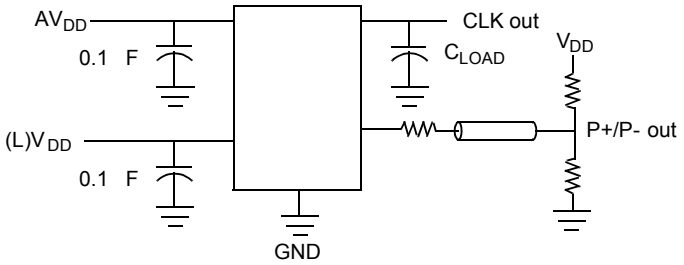

ALL OUTPUTS, DUTY CYCLE, RISE/FALL TIME

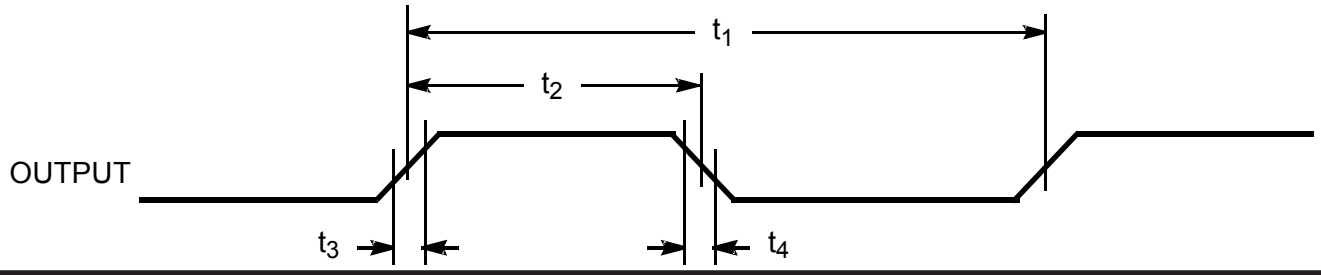

OUTPUT TRI-STATE TIMING

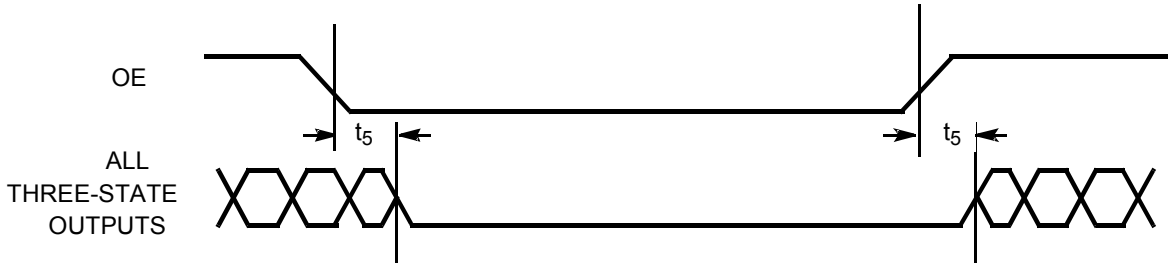

CLK OUTPUT JITTER

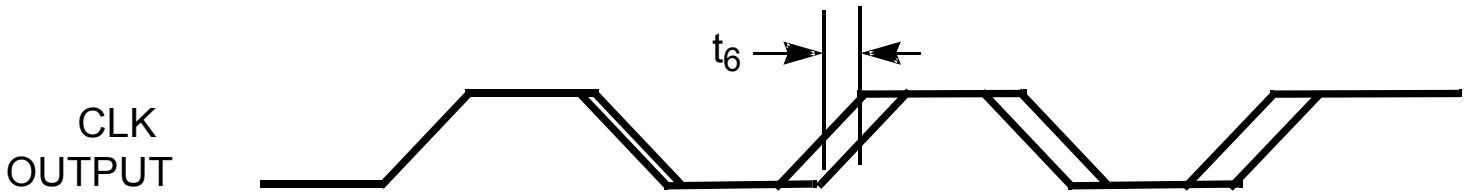

P+/P- CROSSING POINT AND JITTER

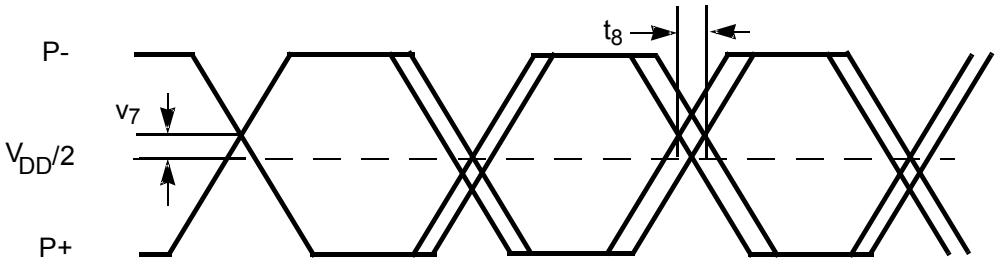

CPU FREQUENCY CHANGE

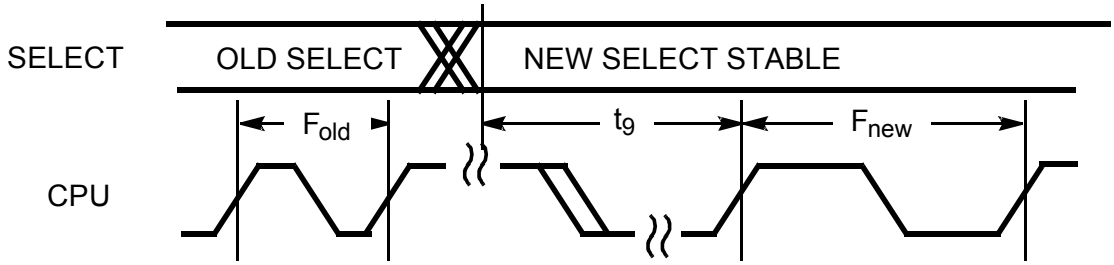

DIP

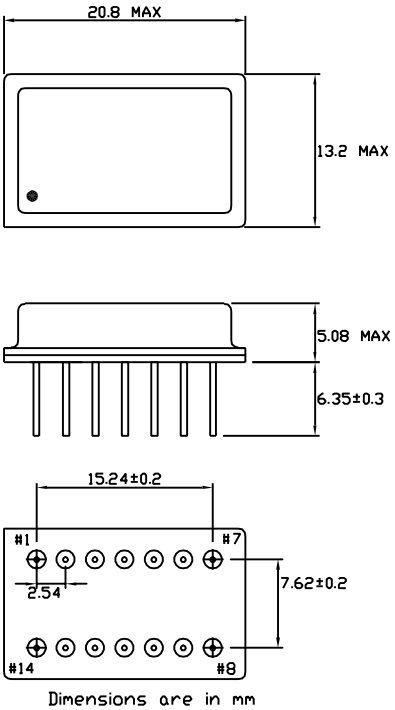

PIN FUNCTION
PIN 1 OE (CONNECT TO VDD)
PIN 2 SUSPEND (CONNECT TO GND)
PIN 3 VDD
PIN 4 CLK C OUTPUT
PIN 5 CONNECT TO PIN 6
PIN 6 CONNECT TO PIN 5
PIN 7 GND
PIN 8 12 MHz REF CLOCK OUTPUT
PIN 9 PECL - OUTPUT
PIN10 PECL + OUTPUT
PIN 11 SDAT
PIN 12 SCLK
PIN 13 CLK A OUTPUT
PIN 14 CLK B OUTPUT

SMD

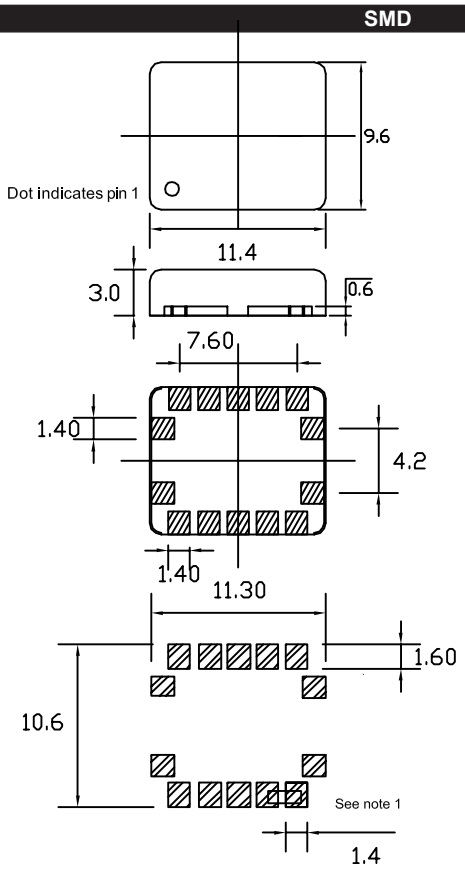

PIN FUNCTION
PIN 1 FACTORY USE (MAKE NO CONNECTION)
PIN 2 OE
PIN 3 VDD
PIN 4 CLK C OUTPUT
PIN 5 CONNECT TO PIN 6
PIN 6 CONNECT TO PIN 5
PIN 7 GND
PIN 8 12 MHz REF CLOCK OUTPUT
PIN 9 PECL - OUTPUT
PIN10 PECL + OUTPUT
PIN 11 SCLK
PIN 12 SDAT
PIN 13 CLK A OUTPUT
PIN 14 CLK B OUTPUT

Dimensions in mm
Recommended solder pad layout

Note1:
For proper operation pin 5 must be connected to pin 6

Cardinal Components, Inc.
155 Route 46 West
Wayne, NJ 07470
Rev: M-090414-14

TEL: (973)785-1333
E-MAIL: sales@cardinalxtal.com
WEB: http://www.cardinalxtal.com

Flash Programmability:

Non-Volatile programming enables easy customization, ultrafast turnaround, performance tweaking, design timing margin testing, inventory control, lower part count, and more secure product supply. In addition, any part in the family can also be programmed multiple times, which reduces programming errors and provides an easy upgrade path for existing designs.

Feature of the I^2C-bus:

- Only two bus lines are required; a serial data line (SDA) and a serial clock line (SCL)
- Each device connected to the bus is software addressable by a unique address and simple master/slave relationship exist at all times; master can operate as a master- transmitter or as master-receivers
- It's a true multi-master bus including collision detection and arbitration to prevent data corruption if two or more master simultaneously initiate data transfer
- Serial 8-bit oriented, bidirectional data transfers can be made at up to 100 Kbit/s in the standard mode, up to 400 kbit/s in the fast-mode, or up to 3.4 Mbit/s in the High-speed mode

Designer Benefits:

I^2C bus compatible In Circuit Reconfigurable Oscillator "ICRO" allow a system design to rapidly progress directly from a functional block diagram to a prototype. Moreover, since they 'clip' directly onto the I^2C bus without any additional external interfacing, they allow a prototype system to be modified or upgraded simply by 'clipping' or 'unclipping' ICRO to or from the bus.

Here are some of the feature of I^2C- bus compatible ICRO which are particularly attractive to designer

- Functional blocks on the block diagram correspond with the actual ICRO designs proceed rapidly from block diagram to final schematic
- No need to design bus interfaces because the I^2C-bus interface is already integrated on the ICRO
- Integrated addressing and data-transfer protocol allow systems to be completely software-defined
- The same ICRO types can often be used in many different applications
- Design-time reduces as designers quickly become familiar with the frequently used functional book represented by I^2C-bus compatible and ICRO
- ICRO can be added to or remove from system without affecting any other circuits on the bus

In addition to these advantages, the CMOS ICRO in the I^2C-bus compatible range offer designers special feature which are particularly attractive for portable equipment and battery-backed systems.

They All Have:

- Extremely low current consumption
- High Noise immunity
- Wide operating temperature range

Manufacturer Benefits

I^2C-bus compatible ICRO don't only assist designer, they also give a wider range of benefits to the equipment manufacturer because:

- The simple 2-wire serial I^2C bus minimizes interconnections so ICRO have fewer pins and there are not so many PCB tracks; result- smaller and less expensive PCBs
- The completely integrated I^2C-bus protocol eliminates the need for address decoders and other 'glue logic'
- The multi-master capability of the I^2C-bus allows rapid testing and alignment of end-user equipment via external connections to an assembly line
- I^2C-bus handbook, I^2C Website: www.semiconductors.philips.com/I2C

Re-Configurable 4 Output PECL TCXO

- *Fixed & Re-Configurable Multi-Frequency Oscillator*
- *Intuitive software and I²C interface*
- *Easily update system*
- *Industry-standard packaging saves on board space*
- *Mult. outputs 1 pkg vs. mult. osc & assoc. comp.*
- *Differential PECL Output*
- *Performs well under all conditions*

Applications

- *High-end multimedia*
- *Communications*
- *Industrial*
- *A/D converters*
- *Consumer Applications*
- *New and innovative products*
- *Temperature-sensitive applications*

Series CCT4RE

Pb RoHS COMPLIANT 2002 / 95 / EC

Part Numbering Example: CCT4RE 1A 200.0 - 150.0 / 125.0

CCT4RE	1A	200	150	125
SERIES	PACKAGE STYLE	FREQUENCY P/P-	FREQUENCY A	FREQUENCY B
	1A=14 pin dip 9=9.6x11.4 SMD	100-400 MHz PECL	0.2 - 200 MHz	0.2 - 200 MHz

Specifications:	Min	Typ	Max	Unit
Frequency Range:				
Output PECL +	100		400	MHz
Output PECL -	100		400	MHz
Output A CMOS	0.2		200	MHz
Output B CMOS	0.2		200	MHz
Available Stability Options:	-2.5		2.5	ppm
Supply Voltage:	3.135	3.3	3.465	V
Operating Temperature Range Options:	-40		85	°C
Storage Temperature:	-55		125	°C
Duty Cycle:	40 45		60 55	% %
Start-Up Time:		3	10	mS
Aging (PPM/1st Year): Ta=25C, Vdd=3.3V			±1	
Static Discharge Voltage Mil-Std 883, method 3015	2000			V
Output Load: *				
CMOS, < 40 MHz			30	pF
CMOS, ≥ 40 MHz			15	pF
Output Level:	PECL/CMOS			
Packaging:	25 / Tube Tape & Reel			14 pin SMD

Notes: Recommended .01 µF bypass capacitor from Vcc to GND. Capacitor should be as close to oscillator as possible.
* LV PECL outputs require an external termination network

Cardinal Components, Inc.
155 Route 46 West
Wayne, NJ 07470
Rev: M-090414-14

TEL: (973)785-1333
E-MAIL: sales@cardinalxtal.com
WEB: http://www.cardinalxtal.com

Re-Configurable 4 Output PECL TCXO

Series CCT4RE

Electrical Characteristics

	Description	Conditions	Min	Typ	Max	Unit
Ioh	Output High Current	Voh = (L)Vdd - 0.5, (L)Vdd = 3.3 V	12	24		mA
Iol	Output Low Current	Vol = .5, (L)Vdd = 3.3 V	12	24		mA
Vih	High Level Input Voltage	CMOS levels, % of Vdd	0.7			V
Vil	Low-Level Input Voltage	CMOS levels, % of Vdd			0.3	V
Iih	Input High Current	Vin = AVdd - 0.3 V		<1	10	µA
Iil	Input Low Current	Vin = + 0.3 V		<1	10	µA
Ioz	Output Leakage Current	tri-state outputs			10	µA
Idd	Total Power Supply Current	Example 1: 1 PECL Output @155.52 MHz 1 CMOS Output @19.44 MHz 1 CMOS Output @38.88 MHz Example 2: 1 PECL Output @400 MHz 1 CMOS Output @106.25 MHz 1 CMOS Output @53.125 MHz		26 48		mA mA
Idds	Shutdown Power Supply Curr	Shutdown active		5	20	µA

Output Clock Switching Characteristics

	Description	Conditions	Min	Typ	Max	Unit
1/t1	Output Frequency	Clock output limit, CMOS, Commercial Clock output limit, PECL, Commercial	0.2 100		200 400	MHz MHz
t3	Rising Edge Slew Rate	Output clock rise time, 20% – 80% Vdd	0.75	1.4		nS
t4	Falling Edge Slew Rate	Output clock fall time, 20% – 80% Vdd	0.75	1.4		nS
t5	Output tri-state timing after SD/OE switches	Time for output to enter/leave tri-state mode		150	300	nS
t6	Clock Jitter measured at Vdd/2	Peak-to-Peak period jitter, CLK outputs		200		pS
v7	P+/P- Crossing Point	Crossing point ref. to Vdd/2, bal res. net	-0.2	0	0.2	V
	Frequency Switch Time	Change time		2	4	ms

TEST CIRCUIT

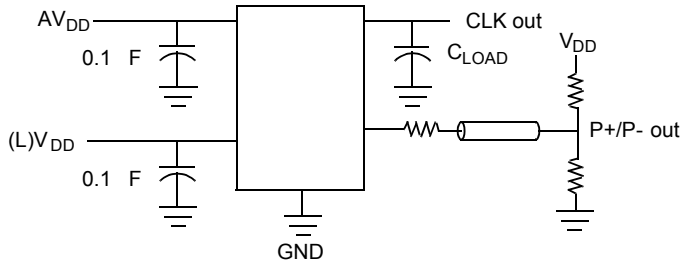

ALL OUTPUTS, DUTY CYCLE, RISE/FALL TIME

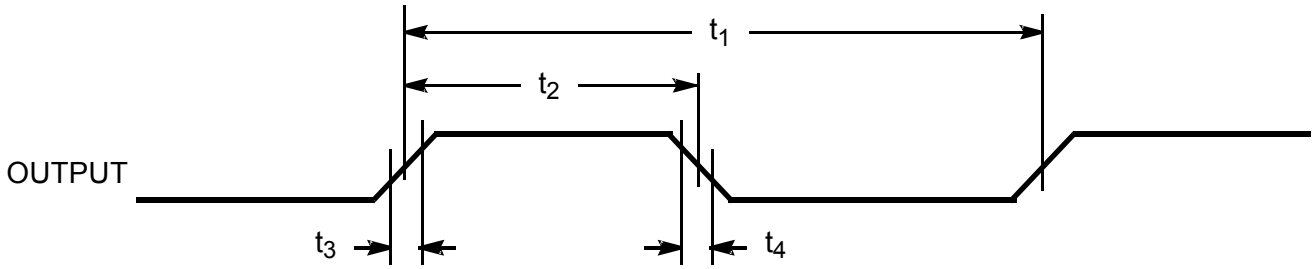

OUTPUT TRI-STATE TIMING

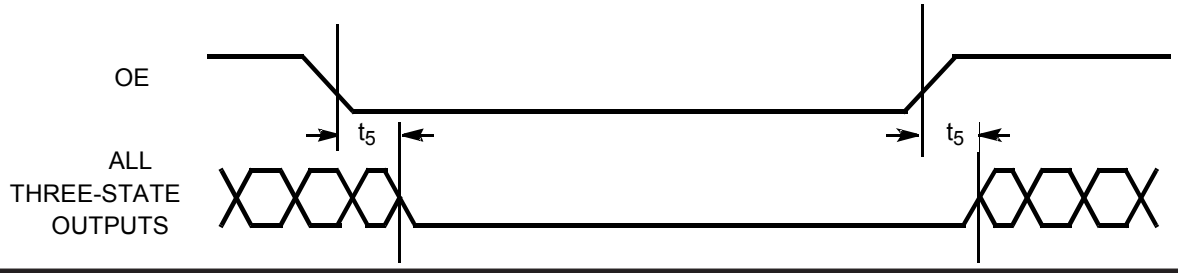

CLK OUTPUT JITTER

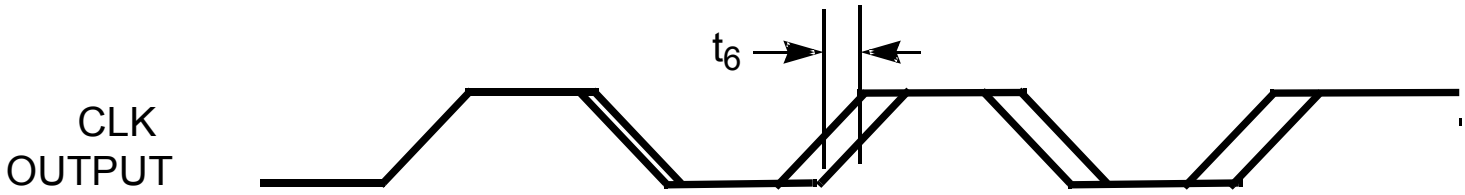

P+/P- CROSSING POINT AND JITTER

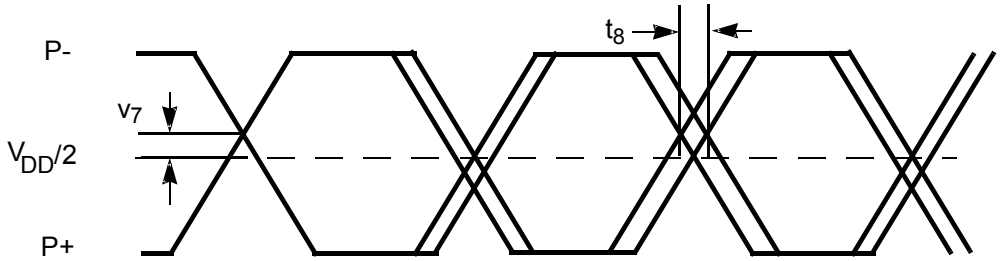

CPU FREQUENCY CHANGE

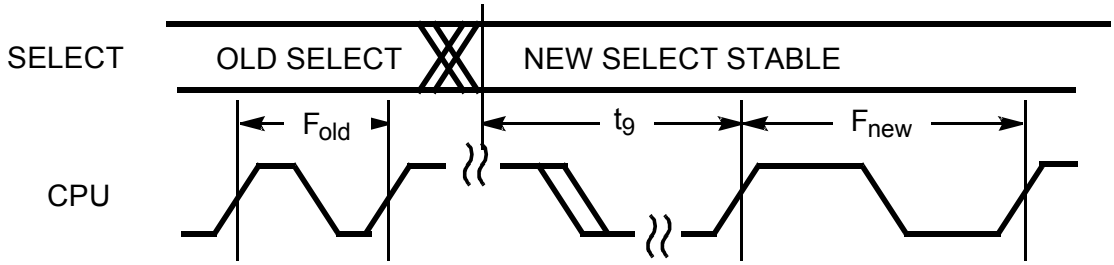

DIP

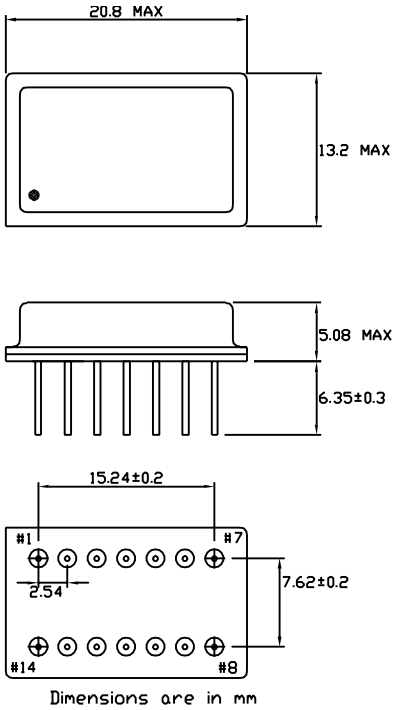

PIN FUNCTION
PIN 1 OE (CONNECT TO VDD)
PIN 2 SUSPEND (CONNECT TO GND)
PIN 3 VDD
PIN 4 FACTORY USE (MAKE NO CONNECTION)
PIN 5 CONNECT TO PIN 6
PIN 6 CONNECT TO PIN 5
PIN 7 GND
PIN 8 FACTORY USE (MAKE NO CONNECTION)
PIN 9 PECL - OUTPUT
PIN10 PECL + OUTPUT
PIN 11 SDAT
PIN 12 SCLK
PIN 13 CLK A OUTPUT
PIN 14 CLK B OUTPUT

SMD

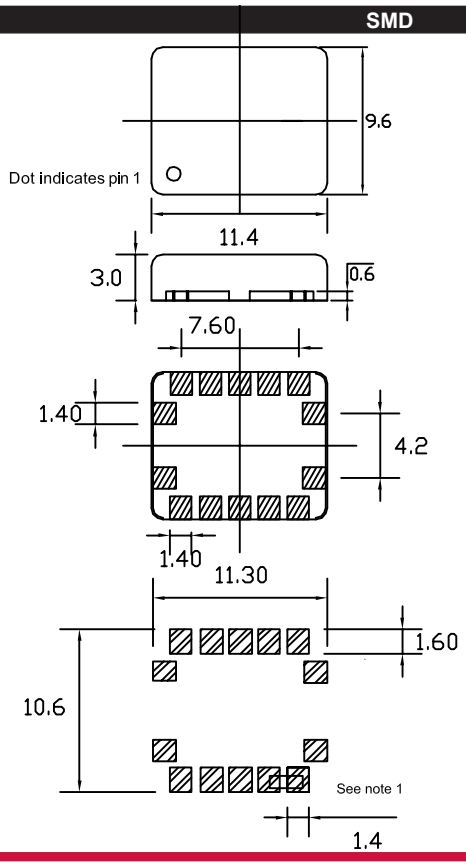

PIN FUNCTION
PIN 1 FACTORY USE (MAKE NO CONNECTION)
PIN 2 OE
PIN 3 VDD
PIN 4 FACTORY USE (MAKE NO CONNECTION)
PIN 5 CONNECT TO PIN 6
PIN 6 CONNECT TO PIN 5
PIN 7 GND
PIN 8 FACTORY USE (MAKE NO CONNECTION)
PIN 9 PECL - OUTPUT
PIN10 PECL + OUTPUT
PIN 11 SCLK
PIN 12 SDAT
PIN 13 CLK A OUTPUT
PIN 14 CLK B OUTPUT

Dimensions in mm
Recommended solder pad layout

Note1:
For proper operation pin 5 must be connected to pin 6

Cardinal Components, Inc.
155 Route 46 West
Wayne, NJ 07470

TEL: (973)785-1333
E-MAIL: sales@cardinalxtal.com
WEB: http://www.cardinalxtal.com

Flash Programmability:

Non-Volatile programming enables easy customization, ultrafast turnaround, performance tweaking, design timing margin testing, inventory control, lower part count, and more secure product supply. In addition, any part in the family can also be programmed multiple times, which reduces programming errors and provides an easy upgrade path for existing designs.

Feature of the I^2C-bus:

- Only two bus lines are required; a serial data line (SDA) and a serial clock line (SCL)
- Each device connected to the bus is software addressable by a unique address and simple master/slave relationship exist at all times; master can operate as a master- transmitter or as master-receivers
- It's a true multi-master bus including collision detection and arbitration to prevent data corruption if two or more master simultaneously initiate data transfer
- Serial 8-bit oriented, bidirectional data transfers can be made at up to 100 Kbit/s in the standard mode, up to 400 kbit/s in the fast-mode, or up to 3.4 Mbit/s in the High-speed mode

Designer Benefits:

I^2C bus compatible In Circuit Reconfigurable Oscillator "ICRO" allow a system design to rapidly progress directly from a functional block diagram to a prototype. Moreover, since they 'clip' directly onto the I^2C bus without any additional external interfacing, they allow a prototype system to be modified or upgraded simply by 'clipping' or 'unclipping' ICRO to or from the bus.

Here are some of the feature of I^2C- bus compatible ICRO which are particularly attractive to designer

- Functional blocks on the block diagram correspond with the actual ICRO designs proceed rapidly from block diagram to final schematic
- No need to design bus interfaces because the I^2C-bus interface is already integrated on the ICRO
- Integrated addressing and data-transfer protocol allow systems to be completely software-defined
- The same ICRO types can often be used in many different applications
- Design-time reduces as designers quickly become familiar with the frequently used functional book represented by I^2C-bus compatible and ICRO
- ICRO can be added to or remove from system without affecting any other circuits on the bus

In addition to these advantages, the CMOS ICRO in the I^2C-bus compatible range offer designers special feature which are particularly attractive for portable equipment and battery-backed systems.

They All Have:

- Extremely low current consumption
- High Noise immunity
- Wide operating temperature range

Manufacturer Benefits

I^2C-bus compatible ICRO don't only assist designer, they also give a wider range of benefits to the equipment manufacturer because:

- The simple 2-wire serial I^2C bus minimizes interconnections so ICRO have fewer pins and there are not so many PCB tracks; result- smaller and less expensive PCBs
- The completely integrated I^2C-bus protocol eliminates the need for address decoders and other 'glue logic'
- The multi-master capability of the I^2C-bus allows rapid testing and alignment of end-user equipment via external connections to an assembly line
- I^2C-bus handbook, I^2C Website: www.semiconductors.philips.com/I2C

Re-Configurable 5 Output PECL TCXO

- *Fixed & Re-Configurable Multi-Frequency Oscillator*
- *Intuitive software and I²C interface*
- *Easily update system*
- *Industry-standard packaging saves on board space*
- *Mult. outputs 1 pkg vs. mult. osc & assoc. comp.*
- *Differential PECL Output*
- *Performs well under all conditions*

Applications

- *High-end multimedia*
- *Communications*
- *Industrial*
- *A/D converters*
- *Consumer Applications*
- *New and innovative products*
- *Temperature-sensitive applications*

Series CCT5RE

Pb RoHS COMPLIANT 2002 / 95 / EC

Part Numbering Example: CCT5RE 1A 200.0 - 150.0 / 125.0 / 100.0

CCT5RE	1A	200	150	125	100
SERIES	PACKAGE STYLE	FREQUENCY P/P-	FREQUENCY A	FREQUENCY B	FREQUENCY C
	1A=14 pin dip 9=9.6x11.4 SMD	100-400 MHz PECL	0.2 - 200 MHz	0.2 - 200 MHz	0.2 - 200 MHz

Specifications:	Min	Typ	Max	Unit
Frequency Range:				
Output PECL +	100		400	MHz
Output PECL -	100		400	MHz
Output A CMOS	0.2		200	MHz
Output B CMOS	0.2		200	MHz
Output C CMOS	0.2		200	MHz
Available Stability Options:	-2.5		2.5	ppm
Supply Voltage:	3.135	3.3	3.465	V
Operating Temperature Range Options:	-40		85	°C
Storage Temperature:	-55		125	°C
Duty Cycle:	40 45		60 55	% %
Start-Up Time:		3	10	mS
Aging (PPM/1st Year): Ta=25C, Vdd=3.3V			±1	ppm
Static Discharge Voltage Mil-Std 883, method 3015	2000			V
Output Load: *				
CMOS, < 40 MHz			30	pF
CMOS, ≥ 40 MHz			15	pF
Output Level:	PECL/CMOS			
Packaging:	25 / Tube Tape & Reel			14 pin SMD

Notes: Recommended .01 µF bypass capacitor from Vcc to GND. Capacitor should be as close to oscillator as possible.
* LV PECL outputs require an external termination network

Cardinal Components, Inc.
155 Route 46 West
Wayne, NJ 07470

TEL: (973)785-1333
E-MAIL: sales@cardinalxtal.com
WEB: http://www.cardinalxtal.com

Re-Configurable 5 Output PECL TCXO

Series CCT5RE

Electrical Characteristics

	Description	Conditions	Min	Typ	Max	Unit
Ioh	Output High Current	Voh = (L)Vdd - 0.5, (L)Vdd = 3.3 V	12	24		mA
Iol	Output Low Current	Vol = .5, (L)Vdd = 3.3 V	12	24		mA
Vih	High Level Input Voltage	CMOS levels, % of Vdd	0.7			V
Vil	Low-Level Input Voltage	CMOS levels, % of Vdd			0.3	V
Iih	Input High Current	Vin = AVdd - 0.3 V		<1	10	µA
Iil	Input Low Current	Vin = + 0.3 V		<1	10	µA
Ioz	Output Leakage Current	tri-state outputs			10	µA
Idd	Total Power Supply Current	Example 1: 1 PECL output @155.52 MHz 1 CMOS output @19.44 MHz 1 CMOS output @38.88 MHz 1 CMOS output @77.76 MHz Example 2: 1 PECL output @400 MHz 1 CMOS output @106.25 MHz 1 CMOS output @200 MHz 1 CMOS output @100 MHz		29 59		mA mA
Idds	Shutdown Power Supply Curr	Shutdown active		5	20	µA

Output Clock Switching Characteristics

	Description	Conditions	Min	Typ	Max	Unit
1/t1	Output Frequency	Clock output limit, CMOS, Commercial Clock output limit, PECL, Commercial	0.2 100		200 400	MHz MHz
t3	Rising Edge Slew Rate	Output clock rise time, 20% – 80% Vdd	0.75	1.4		nS
t4	Falling Edge Slew Rate	Output clock fall time, 20% – 80% Vdd	0.75	1.4		nS
t5	Output tri-state timing after SD/OE switches	Time for output to enter/leave tri-state mode		150	300	nS
t6	Clock Jitter measured at Vdd/2	Peak-to-Peak period jitter, CLK outputs		200		pS
v7	P+/P- Crossing Point	Crossing point ref. to Vdd/2, bal res. net	-0.2	0	0.2	V
	Frequency Switch Time	Change time		2	4	ms

Cardinal Components, Inc.
155 Route 46 West
Wayne, NJ 07470

TEL: (973)785-1333
E-MAIL: sales@cardinalxtal.com
WEB: http://www.cardinalxtal.com

TEST CIRCUIT

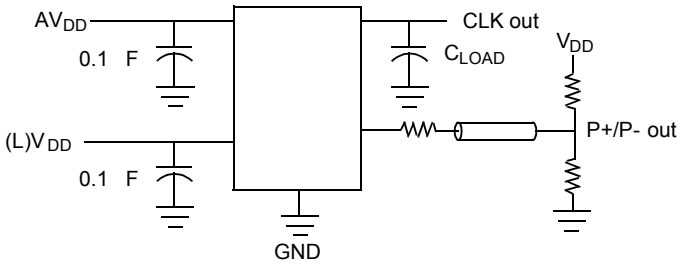

ALL OUTPUTS, DUTY CYCLE, RISE/FALL TIME

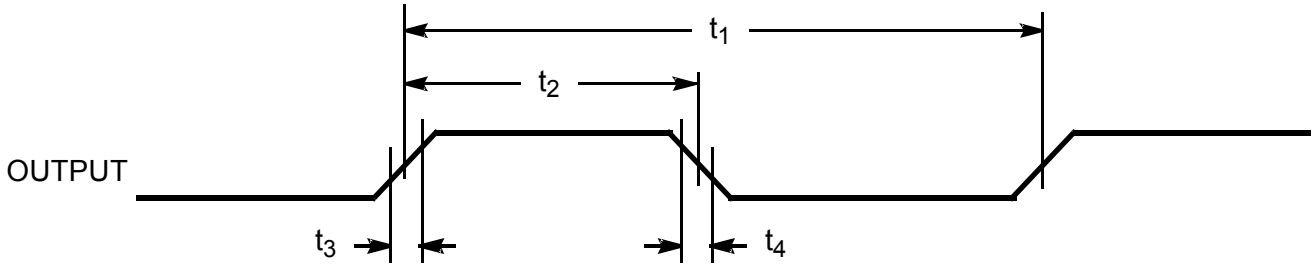

OUTPUT TRI-STATE TIMING

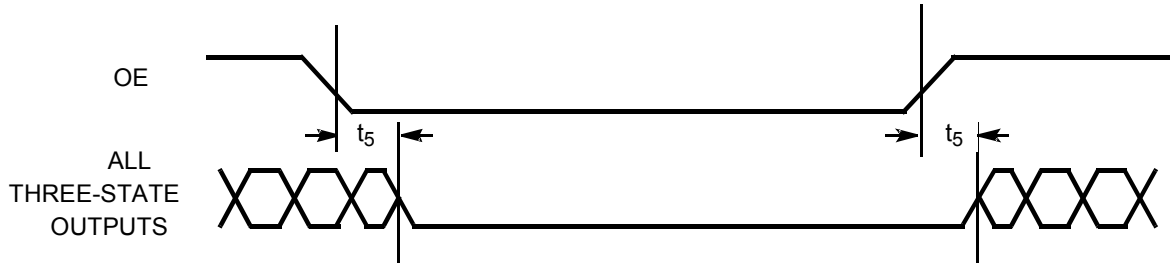

CLK OUTPUT JITTER

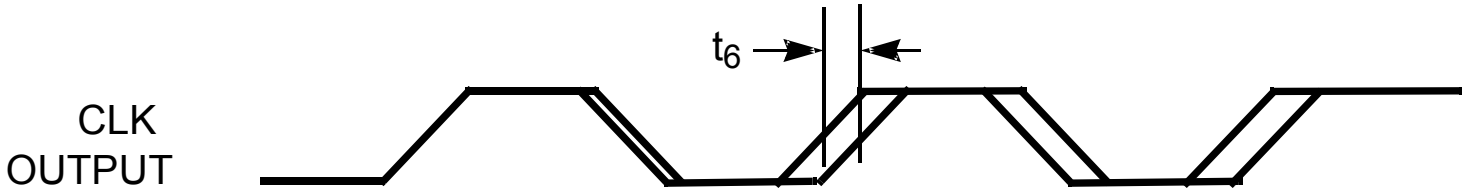

P+/P- CROSSING POINT AND JITTER

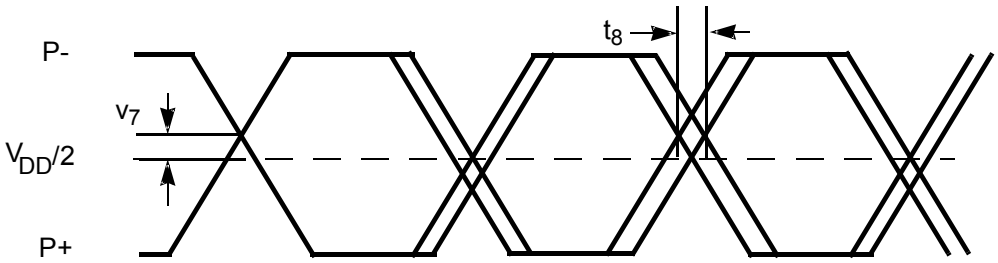

CPU FREQUENCY CHANGE

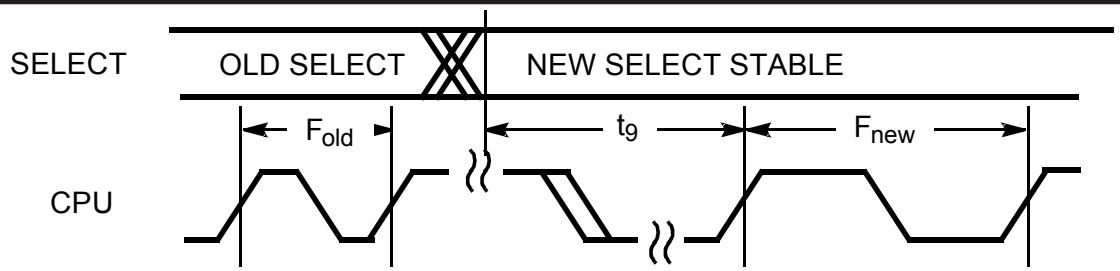

Cardinal Components, Inc.
155 Route 46 West
Wayne, NJ 07470

TEL: (973)785-1333
E-MAIL: sales@cardinalxtal.com
WEB: http://www.cardinalxtal.com

DIP

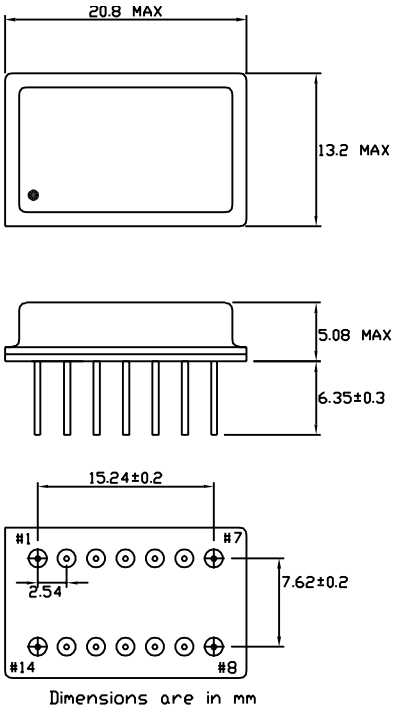

PIN FUNCTION
PIN 1 OE (CONNECT TO VDD)
PIN 2 SUSPEND (CONNECT TO GND)
PIN 3 VDD
PIN 4 CLK C OUTPUT
PIN 5 CONNECT TO PIN 6
PIN 6 CONNECT TO PIN 5
PIN 7 GND
PIN 8 FACTORY USE (MAKE NO CONNECTION)
PIN 9 PECL - OUTPUT
PIN10 PECL + OUTPUT
PIN 11 SDAT
PIN 12 SCLK
PIN 13 CLK A OUTPUT
PIN 14 CLK B OUTPUT

SMD

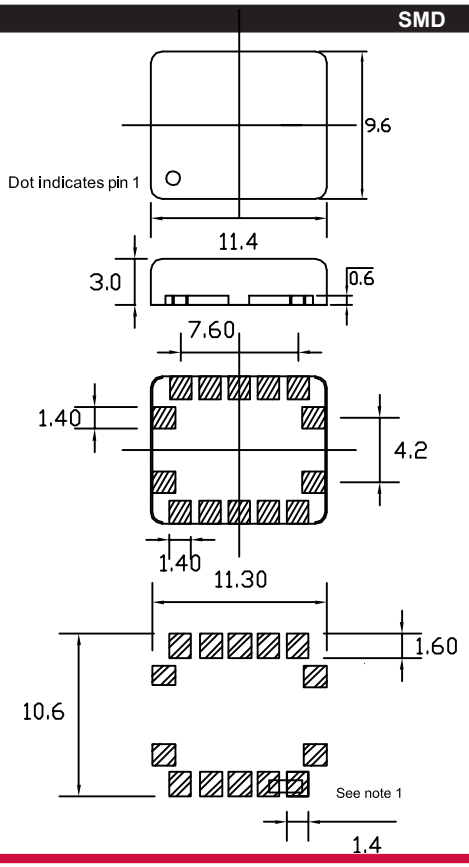

PIN FUNCTION
PIN 1 FACTORY USE (MAKE NO CONNECTION)
PIN 2 OE
PIN 3 VDD
PIN 4 CLK C OUTPUT
PIN 5 CONNECT TO PIN 6
PIN 6 CONNECT TO PIN 5
PIN 7 GND
PIN 8 FACTORY USE (MAKE NO CONNECTION)
PIN 9 PECL - OUTPUT
PIN10 PECL + OUTPUT
PIN 11 SCLK
PIN 12 SDAT
PIN 13 CLK A OUTPUT
PIN 14 CLK B OUTPUT

Dimensions in mm
Recommended solder pad layout

Note1:
For proper operation pin 5 must be connected to pin 6

Cardinal Components, Inc.
155 Route 46 West
Wayne, NJ 07470

TEL: (973)785-1333
E-MAIL: sales@cardinalxtal.com
WEB: http://www.cardinalxtal.com

Flash Programmability:

Non-Volatile programming enables easy customization, ultrafast turnaround, performance tweaking, design timing margin testing, inventory control, lower part count, and more secure product supply. In addition, any part in the family can also be programmed multiple times, which reduces programming errors and provides an easy upgrade path for existing designs.

Feature of the I^2C-bus:

- Only two bus lines are required; a serial data line (SDA) and a serial clock line (SCL)
- Each device connected to the bus is software addressable by a unique address and simple master/slave relationship exist at all times; master can operate as a master- transmitter or as master-receivers
- It's a true multi-master bus including collision detection and arbitration to prevent data corruption if two or more master simultaneously initiate data transfer
- Serial 8-bit oriented, bidirectional data transfers can be made at up to 100 Kbit/s in the standard mode, up to 400 kbit/s in the fast-mode, or up to 3.4 Mbit/s in the High-speed mode

Designer Benefits:

I^2C bus compatible In Circuit Reconfigurable Oscillator "ICRO" allow a system design to rapidly progress directly from a functional block diagram to a prototype. Moreover, since they 'clip' directly onto the I^2C bus without any additional external interfacing, they allow a prototype system to be modified or upgraded simply by 'clipping' or 'unclipping' ICRO to or from the bus.

Here are some of the feature of I^2C- bus compatible ICRO which are particularly attractive to designer

- Functional blocks on the block diagram correspond with the actual ICRO designs proceed rapidly from block diagram to final schematic
- No need to design bus interfaces because the I^2C-bus interface is already integrated on the ICRO
- Integrated addressing and data-transfer protocol allow systems to be completely software-defined
- The same ICRO types can often be used in many different applications
- Design-time reduces as designers quickly become familiar with the frequently used functional book represented by I^2C-bus compatible and ICRO
- ICRO can be added to or remove from system without affecting any other circuits on the bus

In addition to these advantages, the CMOS ICRO in the I^2C-bus compatible range offer designers special feature which are particularly attractive for portable equipment and battery-backed systems.

They All Have:

- Extremely low current consumption
- High Noise immunity
- Wide operating temperature range

Manufacturer Benefits

I^2C-bus compatible ICRO don't only assist designer, they also give a wider range of benefits to the equipment manufacturer because:

- The simple 2-wire serial I^2C bus minimizes interconnections so ICRO have fewer pins and there are not so many PCB tracks; result- smaller and less expensive PCBs
- The completely integrated I^2C-bus protocol eliminates the need for address decoders and other 'glue logic'
- The multi-master capability of the I^2C-bus allows rapid testing and alignment of end-user equipment via external connections to an assembly line
- I^2C-bus handbook, I^2C Website: www.semiconductors.philips.com/I2C

Re-Configurable 6 Output PECL TCXO

- *Fixed & Re-Configurable Multi-Frequency Oscillator*
- *Intuitive software and I²C interface*
- *Easily update system*
- *Industry-standard packaging saves on board space*
- *Mult. outputs 1 pkg vs. mult. osc & assoc. comp.*
- *Differential PECL Output*
- *Performs well under all conditions*

Applications

- *High-end multimedia*
- *Communications*
- *Industrial*
- *A/D converters*
- *Consumer Applications*
- *New and innovative products*
- *Temperature-sensitive applications*

Series CCT6RE

Pb RoHS COMPLIANT 2002 / 95 / EC

Part Numbering Example: CCT6RE 1A 200.0 - 150.0 / 125.0 / 100.0 / 12.0

CCT6RE	1A	200	150	125	100	12
SERIES	PACKAGE STYLE	FREQUENCY P/P-	FREQUENCY A	FREQUENCY B	FREQUENCY C	FREQUENCY R
	1A=14 pin dip 9=9.6x11.4 SMD	100-400 MHz PECL	0.2 - 200 MHz	0.2 - 200 MHz	0.2 - 200 MHz	

Specifications:	Min	Typ	Max	Unit
Frequency Range:				
Output PECL +	100		400	MHz
Output PECL -	100		400	MHz
Output A CMOS	0.2		200	MHz
Output B CMOS	0.2		200	MHz
Output C CMOS	0.2		200	MHz
Output R Fixed		12		MHz
Available Stability Options:	-2.5		2.5	ppm
Supply Voltage:	3.135	3.3	3.465	V
Operating Temperature Range Options:	-40		85	°C
Storage Temperature:	-55		125	°C
Duty Cycle:	40 45		60 55	% %
Start-Up Time:		3	10	mS
Aging (PPM/1st Year): Ta=25C, Vdd=3.3V			±1	ppm
Static Discharge Voltage Mil-Std 883, method 3015	2000			V
Output Load: *				
CMOS, < 40 MHz			30	pF
CMOS, ≥ 40 MHz			15	pF
Output Level:	PCEL/CMOS			
Packaging:	25 / Tube Tape & Reel			14 pin SMD

Notes: Recommended .01 µF bypass capacitor from Vcc to GND. Capacitor should be as close to oscillator as possible.
* LV PECL outputs require an external termination network

Cardinal Components, Inc.
155 Route 46 West
Wayne, NJ 07470
Rev: M-090414-14

TEL: (973)785-1333
E-MAIL: sales@cardinalxtal.com
WEB: http://www.cardinalxtal.com

Re-Configurable 6 Output PECL TCXO

Series CCT6RE

Electrical Characteristics

	Description	Conditions	Min	Typ	Max	Unit
Ioh	Output High Current	Voh = (L)Vdd - 0.5, (L)Vdd = 3.3 V	12	24		mA
Iol	Output Low Current	Vol = .5, (L)Vdd = 3.3 V	12	24		mA
Vih	High Level Input Voltage	CMOS levels, % of Vdd	0.7			V
Vil	Low-Level Input Voltage	CMOS levels, % of Vdd			0.3	V
Iih	Input High Current	Vin = AVdd - 0.3 V		<1	10	µA
Iil	Input Low Current	Vin = + 0.3 V		<1	10	µA
Ioz	Output Leakage Current	tri-state outputs			10	µA
Idd	Total Power Supply Current	Example 1: 1 PECL output @155.52 MHz 1 CMOS output @19.44 MHz 1 CMOS output @38.88 MHz 1 CMOS output @77.76 MHz 1 CMOS output @12 MHz		29		mA
		Example 2: 1 PECL output @400 MHz 1 CMOS output @106.25 MHz 1 CMOS output @200 MHz 1 CMOS output @100 MHz 1 CMOS output @12 MHz		59		mA
Idds	Shutdown Power Supply Curr	Shutdown active		5	20	µA

Output Clock Switching Characteristics

	Description	Conditions	Min	Typ	Max	Unit
1/t1	Output Frequency	Clock output limit, CMOS, Commercial Clock output limit, PECL, Commercial	0.2 100		200 400	MHz MHz
t3	Rising Edge Slew Rate	Output clock rise time, 20% – 80% Vdd	0.75	1.4		nS
t4	Falling Edge Slew Rate	Output clock fall time, 20% – 80% Vdd	0.75	1.4		nS
t5	Output tri-state timing after SD/OE switches	Time for output to enter/leave tri-state mode		150	300	nS
t6	Clock Jitter measured at Vdd/2	Peak-to-Peak period jitter, CLK outputs		200		pS
v7	P+/P- Crossing Point	Crossing point ref. to Vdd/2, bal res. net	-0.2	0	0.2	V
	Frequency Switch Time	Change time		2	4	ms

Cardinal Components, Inc.
155 Route 46 West
Wayne, NJ 07470

TEL: (973)785-1333
E-MAIL: sales@cardinalxtal.com
WEB: http://www.cardinalxtal.com

TEST CIRCUIT

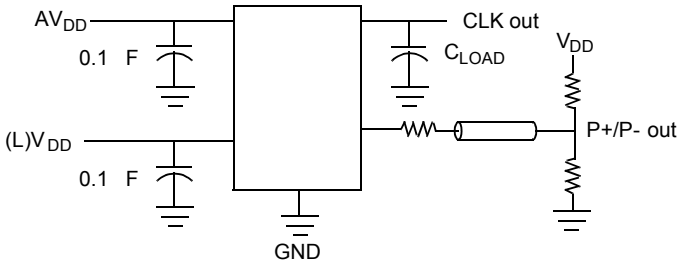

ALL OUTPUTS, DUTY CYCLE, RISE/FALL TIME

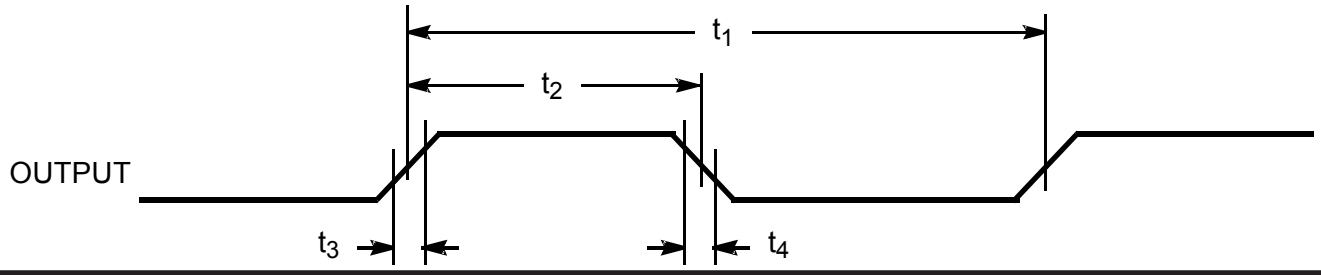

OUTPUT TRI-STATE TIMING

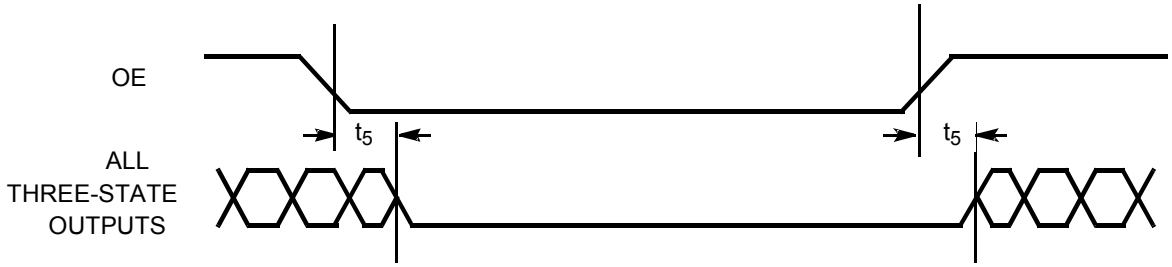

CLK OUTPUT JITTER

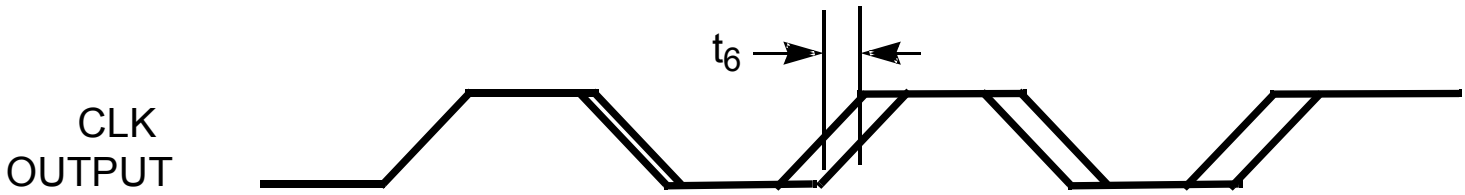

P+/P- CROSSING POINT AND JITTER

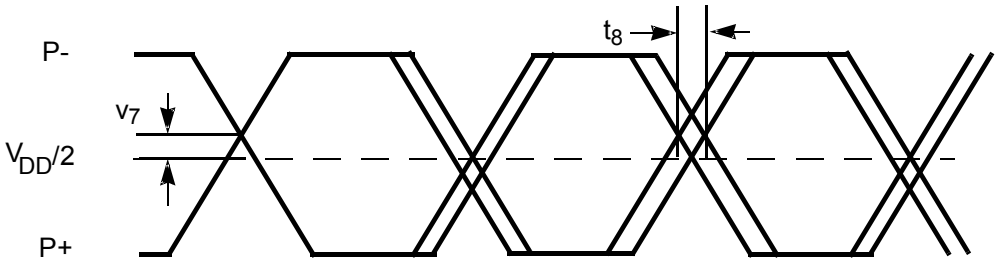

CPU FREQUENCY CHANGE

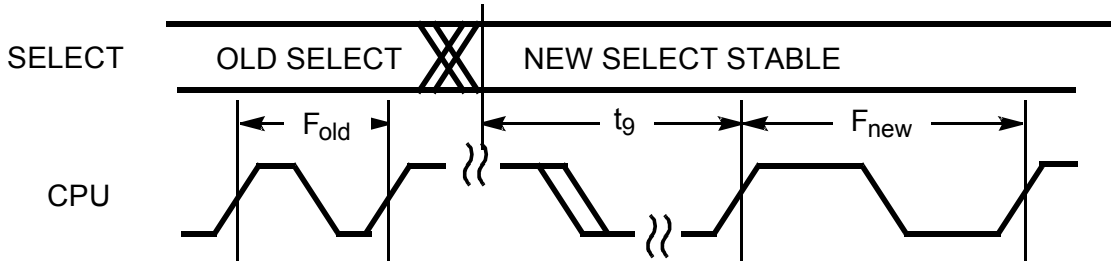

Cardinal Components, Inc.
155 Route 46 West
Wayne, NJ 07470
Rev: M-090414-14

TEL: (973)785-1333
E-MAIL: sales@cardinalxtal.com
WEB: http://www.cardinalxtal.com

DIP

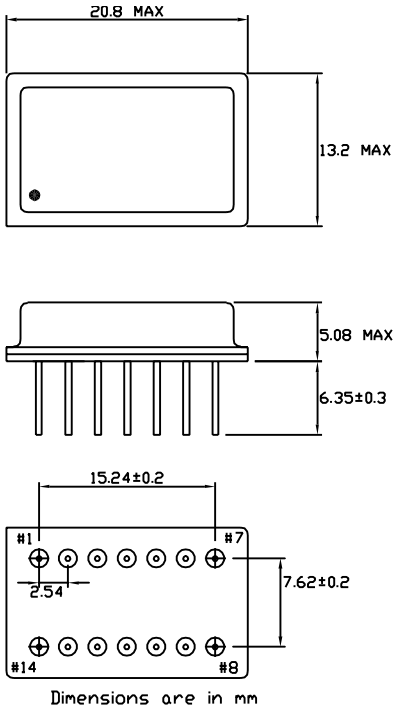

PIN FUNCTION
PIN 1 OE (CONNECT TO VDD)
PIN 2 SUSPEND (CONNECT TO GND)
PIN 3 VDD
PIN 4 CLK C OUTPUT
PIN 5 CONNECT TO PIN 6
PIN 6 CONNECT TO PIN 5
PIN 7 GND
PIN 8 12 MHz REF CLOCK OUTPUT
PIN 9 PECL - OUTPUT
PIN10 PECL + OUTPUT
PIN 11 SDAT
PIN 12 SCLK
PIN 13 CLK A OUTPUT
PIN 14 CLK B OUTPUT

SMD

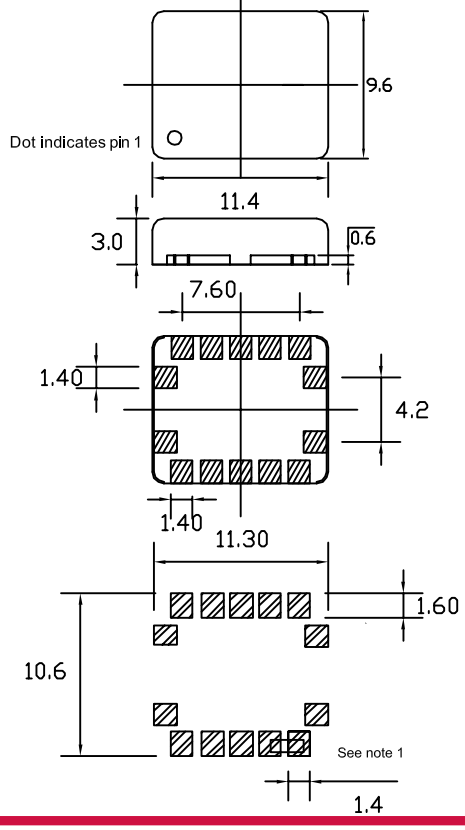

PIN FUNCTION
PIN 1 FACTORY USE (MAKE NO CONNECTION)
PIN 2 OE
PIN 3 VDD
PIN 4 CLK C OUTPUT
PIN 5 CONNECT TO PIN 6
PIN 6 CONNECT TO PIN 5
PIN 7 GND
PIN 8 12 MHz REF CLOCK OUTPUT
PIN 9 PECL - OUTPUT
PIN10 PECL + OUTPUT
PIN 11 SCLK
PIN 12 SDAT
PIN 13 CLK A OUTPUT
PIN 14 CLK B OUTPUT

Dimensions in mm
Recommended solder pad layout

Note1:
For proper operation pin 5 must be connected to pin 6

Cardinal Components, Inc.
155 Route 46 West
Wayne, NJ 07470
Rev: M-090414-14

TEL: (973)785-1333
E-MAIL: sales@cardinalxtal.com
WEB: http://www.cardinalxtal.com

Flash Programmability:

Non-Volatile programming enables easy customization, ultrafast turnaround, performance tweaking, design timing margin testing, inventory control, lower part count, and more secure product supply. In addition, any part in the family can also be programmed multiple times, which reduces programming errors and provides an easy upgrade path for existing designs.

Feature of the I^2C-bus:

- Only two bus lines are required; a serial data line (SDA) and a serial clock line (SCL)
- Each device connected to the bus is software addressable by a unique address and simple master/slave relationship exist at all times; master can operate as a master- transmitter or as master-receivers
- It's a true multi-master bus including collision detection and arbitration to prevent data corruption if two or more master simultaneously initiate data transfer
- Serial 8-bit oriented, bidirectional data transfers can be made at up to 100 Kbit/s in the standard mode, up to 400 kbit/s in the fast-mode, or up to 3.4 Mbit/s in the High-speed mode

Designer Benefits:

I^2C bus compatible In Circuit Reconfigurable Oscillator "ICRO" allow a system design to rapidly progress directly from a functional block diagram to a prototype. Moreover, since they 'clip' directly onto the I^2C bus without any additional external interfacing, they allow a prototype system to be modified or upgraded simply by 'clipping' or 'unclipping' ICRO to or from the bus.

Here are some of the feature of I^2C- bus compatible ICRO which are particularly attractive to designer

- Functional blocks on the block diagram correspond with the actual ICRO designs proceed rapidly from block diagram to final schematic
- No need to design bus interfaces because the I^2C-bus interface is already integrated on the ICRO
- Integrated addressing and data-transfer protocol allow systems to be completely software-defined
- The same ICRO types can often be used in many different applications
- Design-time reduces as designers quickly become familiar with the frequently used functional book represented by I^2C-bus compatible and ICRO
- ICRO can be added to or remove from system without affecting any other circuits on the bus

In addition to these advantages, the CMOS ICRO in the I^2C-bus compatible range offer designers special feature which are particularly attractive for portable equipment and battery-backed systems.

They All Have:

- Extremely low current consumption
- High Noise immunity
- Wide operating temperature range

Manufacturer Benefits

I^2C-bus compatible ICRO don't only assist designer, they also give a wider range of benefits to the equipment manufacturer because:

- The simple 2-wire serial I^2C bus minimizes interconnections so ICRO have fewer pins and there are not so many PCB tracks; result- smaller and less expensive PCBs
- The completely integrated I^2C-bus protocol eliminates the need for address decoders and other 'glue logic'
- The multi-master capability of the I^2C-bus allows rapid testing and alignment of end-user equipment via external connections to an assembly line
- I^2C-bus handbook, I^2C Website: www.semiconductors.philips.com/I2C

6 Output Telecom Oscillator

- *Common multiple telecom frequencies 1 package*
- *Reduced EMI*
- *Differential PECL Output*

Applications

- *SDH / SONET*
- *Digital Switching*
- *Test Equipment*
- *Cellular Telephony*
- *Land Mobile Radio*
- *Communications*

Series **CCE6ET**

Pb RoHS COMPLIANT 2002 / 95 / EC

Part Numbering Example: CCE6ET 1A

CCE6ET — **SERIES**

1A — **PACKAGE STYLE**

1A = 14 pin dip
9 = 9.6 x 11.4

Specifications:	Min	Typ	Max	Unit
Frequency Range:				
* Output PECL +		155.52		MHz
* Output PECL -		155.52		MHz
Output A CMOS		19.44		MHz
Output B CMOS		38.88		MHz
Output C CMOS		77.76		MHz
Output R Fixed		12.00		MHz
Available Stability Options:	-50		50	ppm
Supply Voltage:	3.135	3.3	3.465	V
Operating Temperature Range Options:	-40		85	°C
Storage Temperature:	-55		125	°C
Duty Cycle:	40 45		60 55	% %
Start-Up Time:		3	10	ms
Aging (PPM/1st Year): Ta=25C, Vdd=3.3V			±5	
Static Discharge Voltage Mil-Std 883, method 3015	2000			V
Output Load:			15	pF
Output Level:	PECL/CMOS			
Packaging:	25 / Tube Tape & Reel			14 pin SMD

Notes: Recommended .01 µF bypass capacitor from Vcc to GND. Capacitor should be as close to oscillator as possible.
* LV PECL outputs require an external termination network

Cardinal Components, Inc.
155 Route 46 West
Wayne, NJ 07470

TEL: (973)785-1333
E-MAIL: sales@cardinalxtal.com
WEB: http://www.cardinalxtal.com

6 Output Telecom Oscillator

Series **CCE6ET**

Electrical Characteristics

	Description	Conditions	Min	Typ	Max	Unit
Ioh	Output High Current	Voh = Vdd - 0.5, Vdd = 3.3 V	12	24		mA
Iol	Output Low Current	Vol = .5, Vdd = 3.3 V	12	24		mA
Vih	High Level Input Voltage	CMOS levels, % of Vdd	70			%Vdd
Vil	Low-Level Input Voltage	CMOS levels, % of Vdd			30	%Vdd
Iih	Input High Current	Vin = Vdd - 0.3 V		<1	10	µA
Iil	Input Low Current	Vin = + 0.3 V		<1	10	µA
Ioz	Output Leakage Current	Tri-state outputs			10	µA
Idd	Total Power Supply Current	All outputs active and connected to a load		75		mA
Idds	Shutdown Power Supply Curr	Shutdown active		5	20	µA
OE	Output Enable	Connect to Vdd to enable and Gnd to disable				
SO	Suspend	Connect to Gnd for normal operation				

Output Clock Switching Characteristics

	Description	Conditions	Min	Typ	Max	Unit
1/t1	Output Frequency	See page 1 for outputs				
t3	Rising Edge Slew Rate	Output clock rise time, 20% – 80% Vdd	0.75	1.4		V/ns
t4	Falling Edge Slew Rate	Output clock fall time, 20% – 80% Vdd	0.75	1.4		V/ns
t5	Output Tri-state timing after SD/OE switches	Time for output to enter/leave Tri-state mode		150	300	ns
t6	Clock Jitter measured at Vdd/2	Peak-to-Peak period jitter, CLK outputs		200		ps
v7	P+/P- Crossing Point	Crossing point ref. to Vdd/2 Balanced Resistor Network	-0.2	0	0.2	V

TEST CIRCUIT

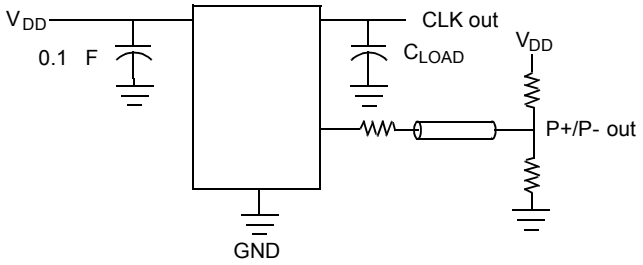

ALL OUTPUTS, DUTY CYCLE, RISE/FALL TIME

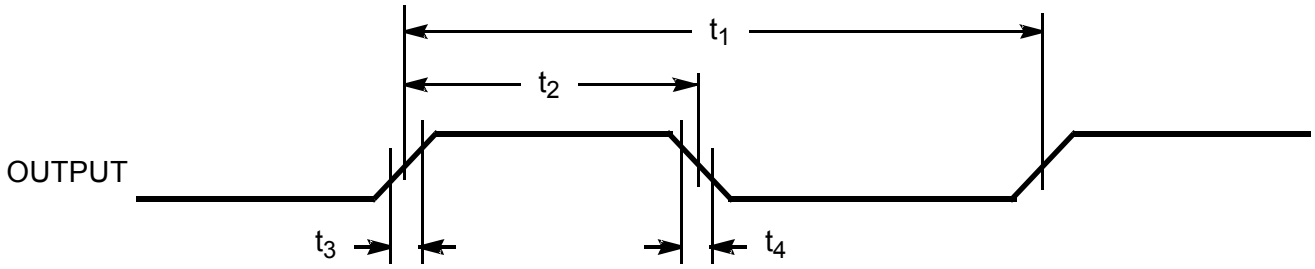

OUTPUT 3-STATE TIMING

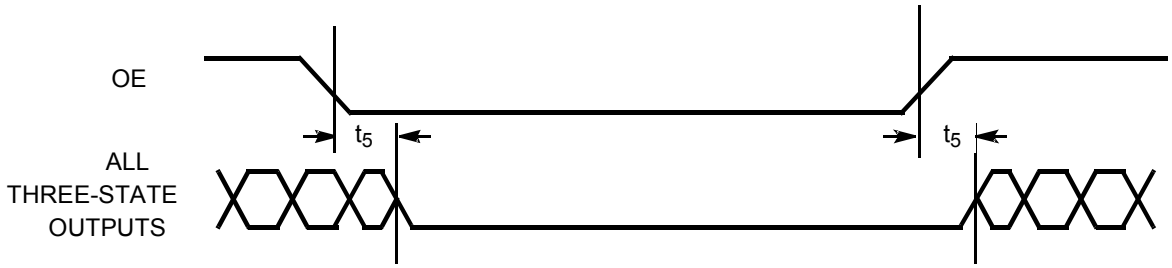

CLK OUTPUT JITTER

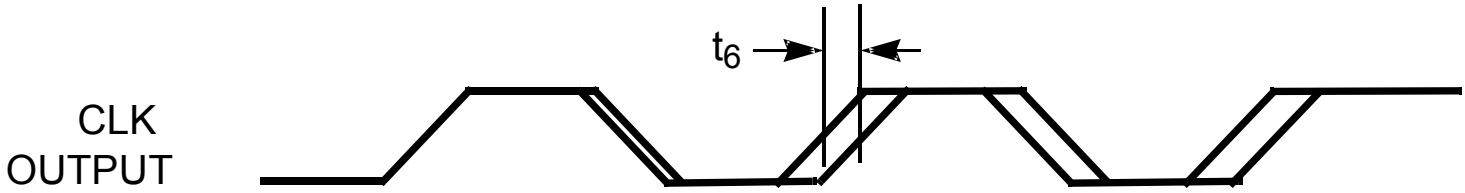

P+/P- CROSSING POINT AND JITTER

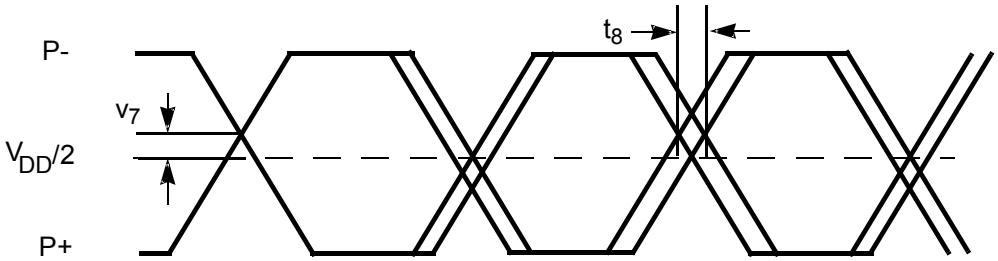

Cardinal Components, Inc.
155 Route 46 West
Wayne, NJ 07470
Rev: M-090414-14

TEL: (973)785-1333
E-MAIL: sales@cardinalxtal.com
WEB: http://www.cardinalxtal.com

DIP

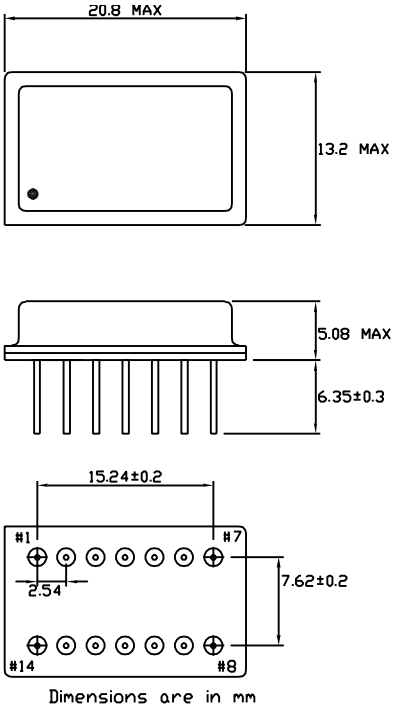

PIN FUNCTION
PIN 1 OE
PIN 2 SUSPEND (CONNECT TO GND)
PIN 3 VDD
PIN 4 77.76 MHz CMOS OUTPUT
PIN 5 CONNECT TO PIN 6
PIN 6 CONNECT TO PIN 5
PIN 7 GND
PIN 8 12 MHz REF CLOCK OUTPUT
PIN 9 155.52 MHz PECL - OUTPUT
PIN10 155.52 MHz PECL + OUTPUT
PIN 11 FACTORY USE (MAKE NO CONNECTION)
PIN 12 FACTORY USE (MAKE NO CONNECTION)
PIN 13 19.44 MHz COMS OUTPUT
PIN 14 38.88 MHz COMS OUTPUT

SMD

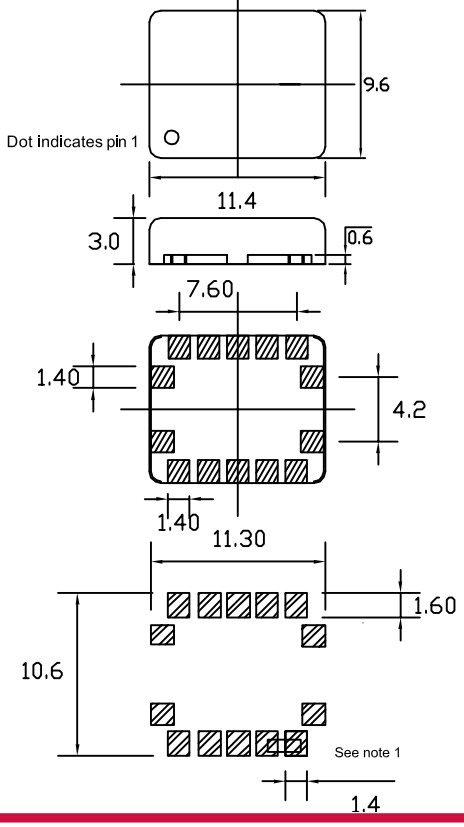

PIN FUNCTION
PIN 1 FACTORY USE (MAKE NO CONNECTION)
PIN 2 OE
PIN 3 VDD
PIN 4 77.76 MHz CMOS OUTPUT
PIN 5 CONNECT TO PIN 6
PIN 6 CONNECT TO PIN 5
PIN 7 GND
PIN 8 12 MHz REF CLOCK OUTPUT
PIN 9 155.52 MHz PECL - OUTPUT
PIN10 155.52 MHz PECL + OUTPUT
PIN 11 FACTORY USE (MAKE NO CONNECTION)
PIN 12 FACTORY USE (MAKE NO CONNECTION)
PIN 13 19.44 MHz COMS OUTPUT
PIN 14 38.88 MHz COMS OUTPUT

Dimensions in mm
Recommended solder pad layout

Note1:
For proper operation pin 5 must be connected to pin 6

Cardinal Components, Inc.
155 Route 46 West
Wayne, NJ 07470

TEL: (973)785-1333
E-MAIL: sales@cardinalxtal.com
WEB: http://www.cardinalxtal.com

Resonator SECTION

Page Number	Resonators	PCB Mount	Package Dimension (LxWxH) in mm	Package Style	Freq Range Low (MHz)	Freq Range High (MHz)
R - 1	**CD02**	TH	9.5 X9.5 X 3.3	TH	292	980
R - 2	**CS22**	SMD	3.0 X 3.0 X1.5	SMD	292	980
R - 3	**CS31**	SMD	3.8 X 3.8 X1.5	SMD	292	980
R - 4	**CS51**	SMD	5.0 X 5.0 X 1.5	SMD	292	980
R - 5	**CS53**	SMD	3.5 X 5.0 X1.5	SMD	292	980

Cardinal Components, Inc.
155 Route 46 West
Wayne, NJ 07470
Rev: R-090414-16

TEL: (973)785-1333
E-MAIL: sales@cardinalxtal.com
WEB: http://www.cardinalxtal.com

Series CDO2

SAW Through Hole Resonator

One-Port SAW TO-39 Case Resonator
Wireless Remote Control
Wireless security transmitters and receivers

One-Port Resonator
Fundamental Mode
Quartz Stablization
Low Cost

Part Numbering Example: CDO2-A0-50-292.123456

CDO2	-	A0	-	50	-	292.123456
SERIES		ADDED FEATURES		OPERATING TEMP.	TOLERANCE	FREQUENCY
CDO2		Blank = Bulk Pack		A0 = -10 C to +60 °C	50 = ± 50 kHz	
				A2 = -40 C to +85 °C	75 = ± 75 kHz	
					100 = ± 100 kHz	

Specifications:

	Min	Typ	Max	Units
Frequency Range FO	292		980	MHz
Operating Temperature TOPR	-40	-10/+60	+85	°C
Temperature Stability at 25°C		-0.032		PPM/(?°C)²
Frequency Tolerance F/FO at 25°C	+ 50		+ 500	kHz
Storage Temp Range TSTG	-40		+85	°C
Insertion Loss IL			3	dB
Shunt Capacitance CO			4	pF
Motional Resistance RM			50	?
Q Factor Qu	8000		20,000	
Aging (First Year) Fa at 25°C	-10		+10	PPM/Yr

CDO2

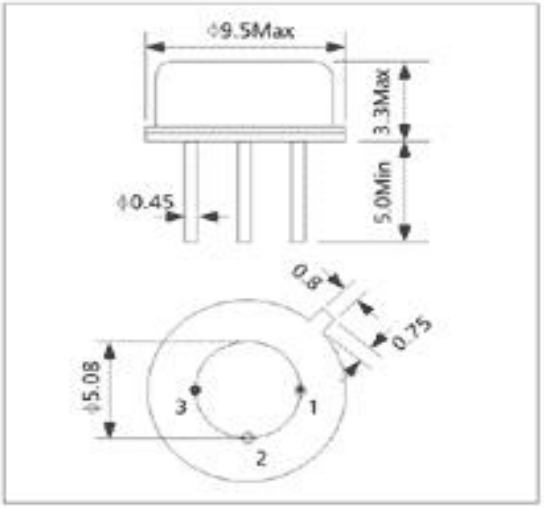

Pin	Connection
1	Terminal 1
2	Terminal 2
3	Case Ground

Typical Low-Power Transmitter Application

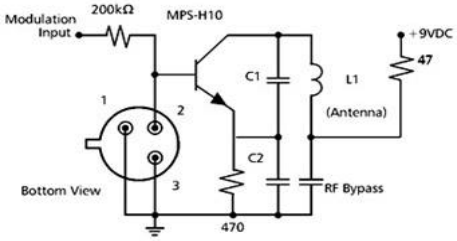

Typical Local Oscillator Application

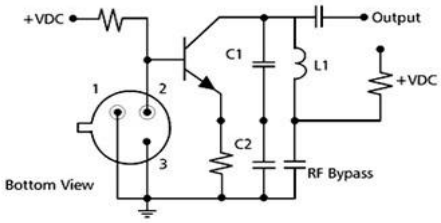

Cardinal Components, Inc.
155 Route 46 West
Wayne, NJ 07470

TEL: (973)785-1333
E-MAIL: sales@cardinalxtal.com
WEB: http://www.cardinalxtal.com

Series **CS22**

SAW Ceramic Surface Mount Resonator

One-Port SAW SMD Resonator
3.0 x 3.0 mm
Wireless Remote Control
Wireless security transmitters and receivers

One-Port Resonator
Fundamental Mode
Quartz Stablization
Low Cost

Part Numbering Example: CS22Z-A0-50-292.123456

CS22	Z	-	A0	-	50	-	292.123456
SERIES	ADDED FEATURES		OPERATING TEMP.		TOLERANCE		FREQUENCY
	Blank = Bulk Pack		A0 = -10 C to +60 °C		50 = ± 50 kHz		
	Z = Tape & Reel		A2 = -40 C to +85 °C		75 = ± 75 kHz		
					100 = ± 100 kHz		

Specifications:

	Min	Typical	Max	Units
Frequency Range FO	292		980	MHz
Operating Temperature TOPR	-40	-10/+60	+85	°C
Temperature Stability at 25°C		-0.032		PPM/(?°C)²
Frequency Tolerance F/FO at 25°C	+ 50		+ 500	kHz
Storage Temp Range TSTG	-40		+85	°C
Insertion Loss IL			3	dB
Shunt Capacitance CO			4	pF
Motional Resistance RM			50	?
Aging (First Year) Fa at 25°C	-10		+10	PPM/Yr

CS22

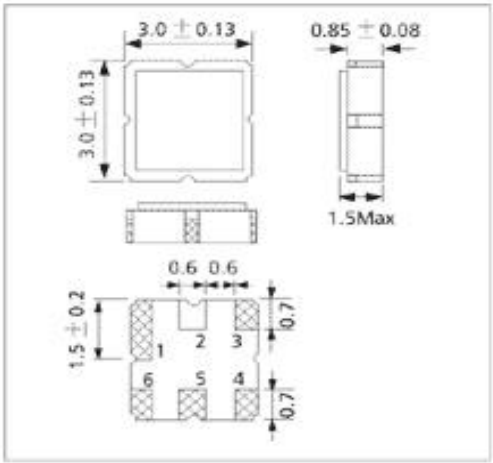

Pin	Connection
1	NC
2	Input
3	NC
4	NC
5	Output
6	NC

Typical Low-Power Transmitter Application

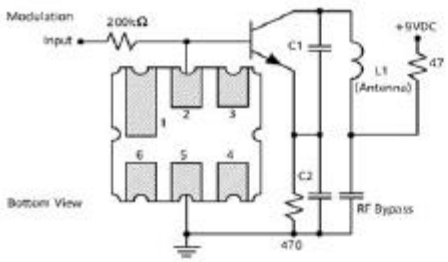

Typical Local Oscillator Application

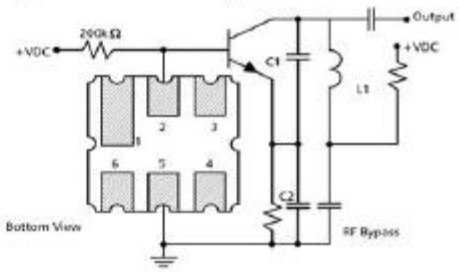

Cardinal Components, Inc.
155 Route 46 West
Wayne, NJ 07470
Rev: R-090414-16

TEL: (973)785-1333
E-MAIL: sales@cardinalxtal.com
WEB: http://www.cardinalxtal.com

Series **CS31**

SAW Ceramic Surface Mount Resonator

One-Port SAW SMD Resonator
3.8 x 3.8 mm
Wireless Remote Control
Wireless security transmitters and receivers

One-Port Resonator
Fundamental Mode
Quartz Stablization
Low Cost

Part Numbering Example: CS31Z-A0-50-292.123456

CS31	Z	-	A0	-	50	-	292.123456
SERIES	ADDED FEATURES		OPERATING TEMP.		TOLERANCE		FREQUENCY
	Blank = Bulk Pack		A0 = -10 C to +60 °C		50 = ± 50 kHz		
	Z = Tape & Reel		A2 = -40 C to +85 °C		75 = ± 75 kHz		
					100 = ± 100 kHz		

Specifications:

	Min	Typical	Max	Units
Frequency Range FO	292		980	MHz
Operating Temperature TOPR	-40	-10/+60	+85	°C
Temperature Stability at 25°C		-0.032		PPM/(?°C)²
Frequency Tolerance F/FO at 25°C	+ 50		+ 500	kHz
Storage Temp Range TSTG	-40		+85	°C
Insertion Loss IL			3	dB
Shunt Capacitance CO			4	pF
Motional Resistance RM			50	?
Aging (First Year) Fa at 25°C	-10		+10	PPM/Yr

CS31

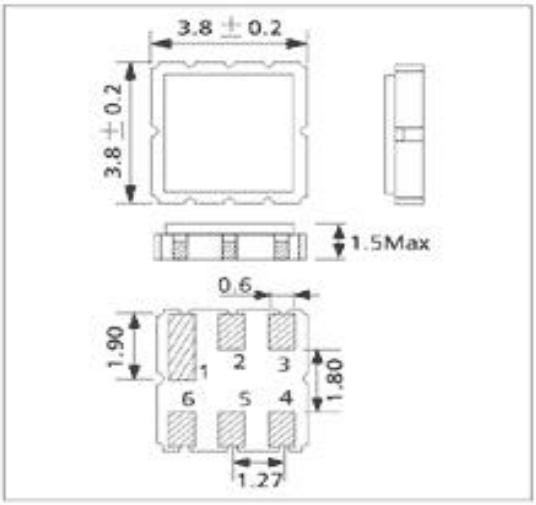

Pin	Connection
1	NC
2	Input
3	NC
4	NC
5	Output
6	NC

Typical Low-Power Transmitter Application

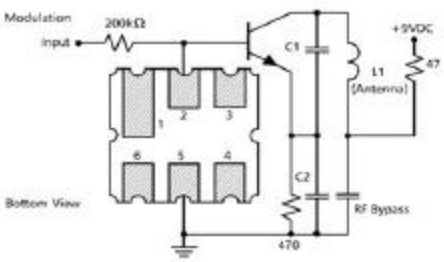

Typical Local Oscillator Application

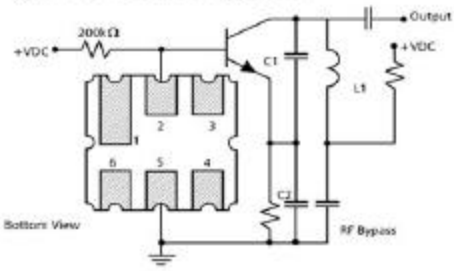

Cardinal Components, Inc.
155 Route 46 West
Wayne, NJ 07470
Rev: R-090414-16

TEL: (973)785-1333
E-MAIL: sales@cardinalxtal.com
WEB: http://www.cardinalxtal.com

Series **CS51**

SAW Ceramic Surface Mount Resonator

One-Port SAW SMD Resonator
5.0 x 5.0 mm
Wireless Remote Control
Wireless security transmitters and receivers

One-Port Resonator
Fundamental Mode
Quartz Stablization
Low Cost

Part Numbering Example: CS51Z-A0-50-292.123456

CS51	Z	-	A0	-	50	-	292.123456
SERIES	ADDED FEATURES		OPERATING TEMP.		TOLERANCE		FREQUENCY
	Blank = Bulk Pack		A0 = -10 C to +60 °C		50 = ± 50 kHz		
	Z = Tape & Reel		A2 = -40 C to +85 °C		75 = ± 75 kHz		
					100 = ± 100 kHz		

Specifications:

	Min	Typical	Max	Units
Frequency Range FO	292		980	MHz
Operating Temperature TOPR	-40	-10/+60	+85	°C
Temperature Stability at 25°C		-0.032		PPM/(?°C)²
Frequency Tolerance F/FO at 25°C	+ 50		+ 500	kHz
Storage Temp Range TSTG	-40		+85	°C
Insertion Loss IL			3	dB
Shunt Capacitance CO			4	pF
Motional Resistance RM			50	?
Aging (First Year) Fa at 25°C	-10		+10	PPM/Yr

CS51

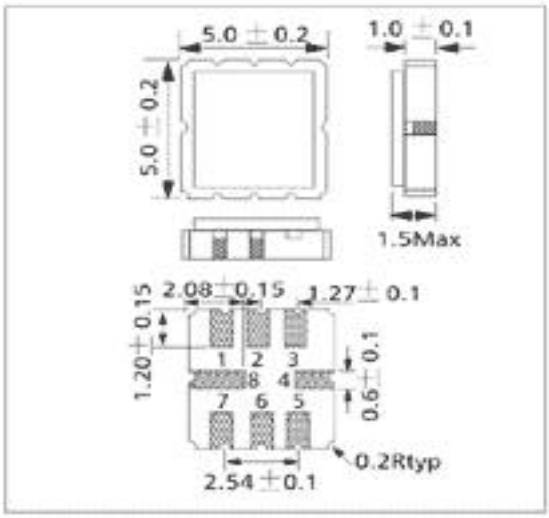

Pin	Connection
1	NC
2	Input
3	NC
4	NC
5	NC
6	Output
7	NC
8	NC

Typical Low-Power Transmitter Application

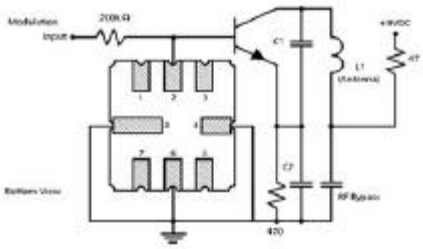

Typical Local Oscillator Application

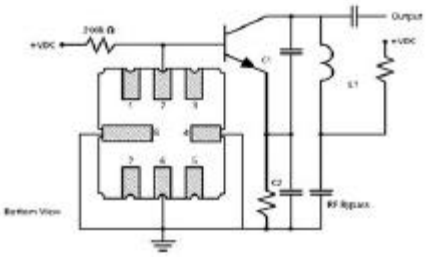

Cardinal Components, Inc.
155 Route 46 West
Wayne, NJ 07470
Rev: R-090414-16

TEL: (973)785-1333
E-MAIL: sales@cardinalxtal.com
WEB: http://www.cardinalxtal.com

Series **CS53**

SAW Ceramic Surface Mount Resonator

One-Port SAW SMD Resonator
5.0 x 3.5 mm
Wireless Remote Control
Wireless security transmitters and receivers

One-Port Resonator
Fundamental Mode
Quartz Stablization
Low Cost

Part Numbering Example: CS53Z-A0-50-292.123456

CS53	Z	-	A0	-	50	-	292.123456
SERIES	ADDED FEATURES		OPERATING TEMP.		TOLERANCE		FREQUENCY
	Blank = Bulk Pack		A0 = -10 C to +60 °C		50 = ± 50 kHz		
	Z = Tape & Reel		A2 = -40 C to +85 °C		75 = ± 75 kHz		
					100 = ± 100 kHz		

Specifications:

	Min	Typical	Max	Units
Frequency Range FO	292		980	MHz
Operating Temperature TOPR	-40	-10/+60	+85	°C
Temperature Stability at 25°C		-0.032		PPM/(?°C)²
Frequency Tolerance F/FO at 25°C	+ 50		+ 500	kHz
Storage Temp Range TSTG	-40		+85	°C
Insertion Loss IL			3	dB
Shunt Capacitance CO			4	pF
Motional Resistance RM			50	?
Aging (First Year) Fa at 25°C	-10		+10	PPM/Yr

CS53

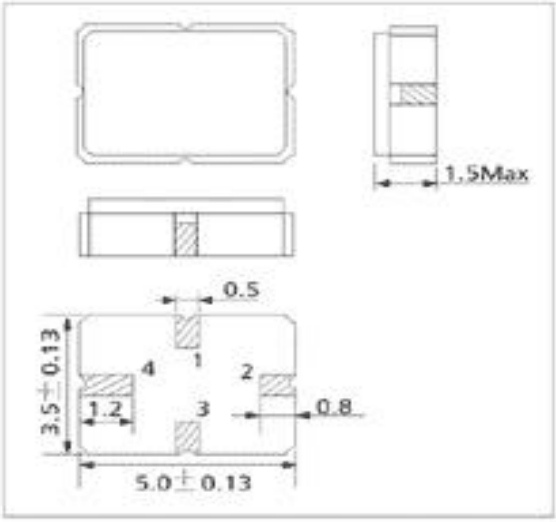

Pin	Connection
1	Input
2	Ground (case)
3	Output
4	Ground (case)

Typical Low-Power Transmitter Application

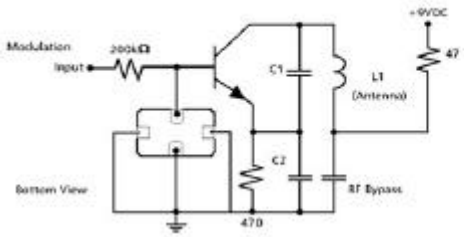

Typical Local Oscillator Application

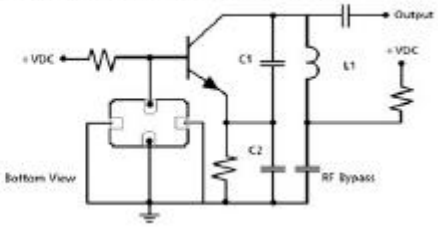

Cardinal Components, Inc.
155 Route 46 West
Wayne, NJ 07470
Rev: R-090414-16

TEL: (973)785-1333
E-MAIL: sales@cardinalxtal.com
WEB: http://www.cardinalxtal.com

Through Hole Ceramic Resonator
Built-in capacitor

SERIES CZTT

Part Numbering Example: CZTT - AW - 3 - 5 - 8.000000

CZTA -	-	AW -	5 -	5 -	8.000.000
SERIES	**ADDED FEATURES**	**OPERATING TEMP.**	**STABILITY (PPM)**	**TOLERANCE (PPM)**	**FREQUENCY (MHz**
	Blank = Bilk Pac	A2 = -40 to +85 °C	3 = ± 3.000	3 = ± 3.000	
	Z = Tape and Reel	AW = -20 to +85 °C	5 = ± 5.000	5 = ± 5.000	

Specifications

Frequency Range	1.8 to 50 MHz
Frequency Stability	± 3.000 PPM (Blue Color) ± 5.000 PPM (Yellow Color)
Frequency Tolerance	± 3.000 PPM (Blue Color) ± 5.000 PPM (Yellow Color)
Operating Temperature Range	-40 to +85 °C -20 to +85 °C
Resonator Resitance	1.8 to 2.99 MHz = 80 Ω 3.0 to 3.49 MHz = 50 Ω 3.5 to 5.99 MHz = 30 Ω 6.0 to 12.99 MHz = 25 Ω 13.0 to 50.0 MHz = 35 Ω
Insulator Resistance Min.	to 100 VDC = 500 M Ω
Recommended Capacitors Test Circuit Samples	1.8 to 19.99 MHz = 30 pF 20 to 25.99 MHz = 15 pF 26 to 50 MHz = 5 pF
Drive Level Max.	1000 μ W
Aging at 25 / ano	± 3.000 PPM

CZTT

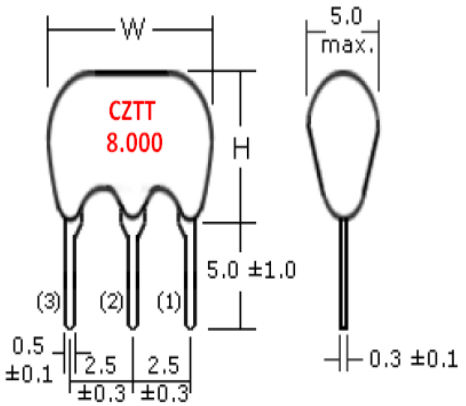

Dimensions in mm

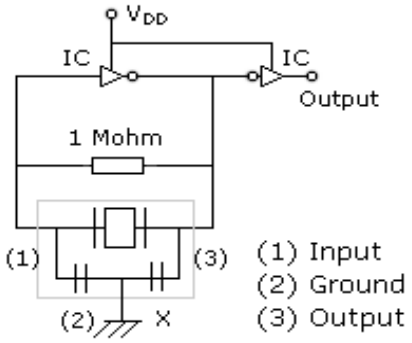

Test Circuit

IC (MG,MT) : 1/6TC4069UBPx2

IC (MX) : 1/6TC74HCU04x2

VDD : +5V

Frequency (MHz)	Dimensions (max.)	
	W	H
1.79 ~ 6.00	10.0	8.0
6.01 ~ 13.00	10.0	10.0
12.00 ~ 13.00	10.0	12.0
13.01 ~ 60.00	10.0	10.0
3.00 ~ 8.00	9.0	5.5

Through Hole Ceramic Resonator
Low Frequency

SERIES CTZB

Part Numbering Example: CZTB - AW - 3 - 5 - 0.455

CZTB	-	AW	-	3	-	5	-	0.455
SERIES	**ADDED FEATURES**	**OPERATING TEMP.**	**STABILITY (PPM)**	**TOLERANCE (PPM)**	**FREQUENCY (MHz)**			
CZTB	Blank = Bilk Pac Z = Tape and Reel	A2 = -40 to +85 °c AW = -20 to +85 °c	3 = ± 3.000	3 = ± 3.000 5 = ± 5.000	In put frequency 3 digits after dot.			

Specifications

Frequency Range	0.190 to 1.250 MHz
Frequency Stability	± 3.000 PPM
Frequency Tolerance at 25 °c	± 3.000 PPM ± 5.000 PPM
Operating Temperature Range	-40 to +85 °c -20 to +85 °c
Resonator Resitance	0.190 to 0.509MHz = 20 Ω 0.510 to 0.699 MHz = 30 Ω 0.700 to 0.999 MHz = 70 Ω 1.000 to 1.250 MHz = 100 Ω
Insulator Resistance Min.	to 100 VDC = 500 M
Recommended Capacitors Test Circuit Samples	0.190 to 0.249 MHz = C1 = 330 pF;C2 = 470 pF 0.250 to 0.374 MHz = C1 = 220 pF;C2 = 470 pF 0.375 to 0.400 MHz = C1 = 120 pF;C2 = 470 pF 0.401 to 1.250 MHz = C1 = C2 = 100 pF
Drive Level Max.	1000 µW
Aging at 25 / ano	± 3.000 PPM

CZTB

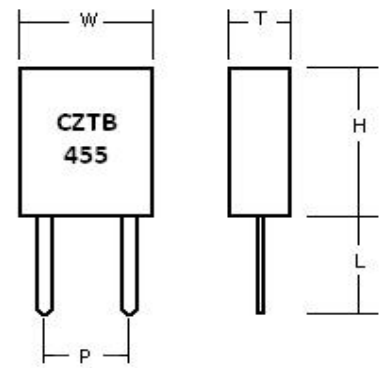

Dimesnsions in mm

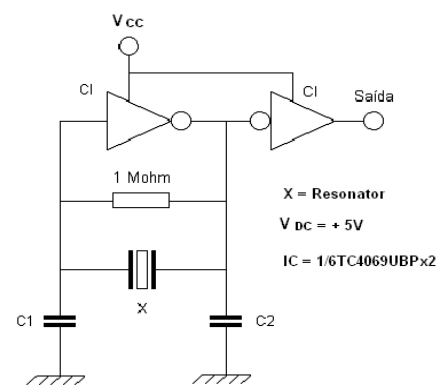

Frequency Range (KHz)	Dimensions				
	W	T	H	P	L
190 ~ 249	13.5	3.6	14.7	10.0	8.0
250 ~ 374	11.0	3.6	12.2	7.7	7.0
375 ~ 429	7.9	3.6	9.3	5.0	6.0
430 ~ 699	7.0	3.5	9.0	5.0	6.0
700 ~ 1250	5.1	2.2	6.3	2.5	4.0

Cardinal Components, Inc.
155 Route 46 West
Wayne, NJ 07470
Rev: R-090414-16

TEL: (973)785-1333
E-MAIL: sales@cardinalxtal.com
WEB: http://www.cardinalxtal.com

Equipment SECTION

Page Number	Equipment	Product	Description	Freq Range Low (MHz)	Freq Range High (MHz)
E - 1	**PG-3000**	Field Oscillator Programming Instrument	Programming instrument to create oscillators, at a user specified frequency, within seconds IN THE FIELD	1	133
E - 2	**PG-3100**	Field Oscillator Programming Instrument	Programming instrument to create oscillators, at a user specified frequency, within seconds IN THE FIELD	1	700
E - 3	**SCUSB**	SCUSB Evaluation Kit	The SCUSB evaluation kit is an assembled and tested PC Board That demonstrates the Multiple Output and Single Output series of reconfigurable oscillators	1	400
E - 31	**SYSTEM 8800**	Production Temperature Test System	Simultaneous temperature testing of up to four different device frequencies, easy to use and surprisingly affordable!	1	800
R - 5	**温度测试系统8800**	Production Temperature Test System, Chinese	Simultaneous temperature testing of up to four different device frequencies, easy to use and surprisingly affordable!	1	800

Field Oscillator Programming Instrument

Series PG-3000

- ***Programming instrument to create oscillators, at a user specified frequency, within seconds IN THE FIELD***
- ***No programming skills needed to create finished oscillators from sealed oscillator blanks***
- ***Programmable CMOS or TTL oscillator outputs***
- ***Programmable output enable and power-down feature***
- ***Programmable asynchronous or synchronous output enable***
- ***Programmable supply voltage level***
- ***PC / USB interface***
- ***Microsoft Windows compatible software***
- ***Programs all Cardinal FIPO products; CPP, CPPL, CPPD, CPPFX***
- ***Low Cost***

Instrument Part Number: **PG-3000**

Specifications:

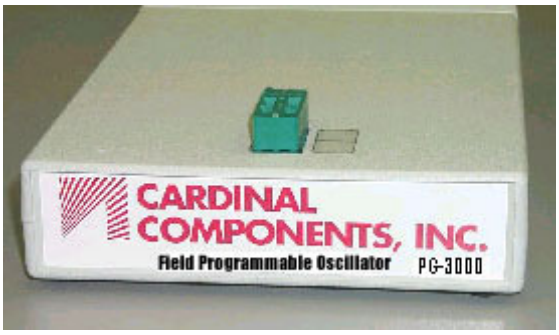

Frequency Range:	1.000 MHz to 133.000 MHz
Acceptable Oscillator Packages:	Style 1 Full-Size 14 Pin DIP Style 4 Half-Size 8 Pin DIP SMD (With Optional SC-2000 Adapter) Plastic (W/ Optional SC-2500 Adapter)
Programmable Voltage Range	2.7 V 1 — 66 MHz 3.3 V 1 — 100 MHz 5.0 V 1— 133 MHz
Oscillator Programming Options:	Output Enable Function Power Down Operation TTL or CMOS Output Asynchronous / Synchronous Ability to reprogram oscillator blank to reuse the same part for two separate applications with different frequency and/or different output characteristics Dual frequency support (CPPD)
Power Supply	USB driven
Instrument Size:	6.5” x 10.5” x 2.5”
Oscillator Blank Part Numbers:	CPP CPPL CPPD CPPFX
User Interface:	USB Microsoft Windows 98, ME, 2000 ZIF Socket User instructions Control parameters Helpful error messages Field upgradable

Cardinal Components, Inc.
155 Route 46 West
Wayne, NJ 07470
Rev: E-090414-11

TEL: **(973)785-1333**
E-MAIL: **sales@cardinalxtal.com**
WEB: **http://www.cardinalxtal.com**

Series **PG-3100**

Field Oscillator Programming Instrument

- ***Programming instrument to create oscillators, at a user specified frequency, within seconds IN THE FIELD***
- ***No programming skills needed to create finished oscillators from sealed oscillator blanks***
- ***Programmable CMOS or TTL oscillator outputs***
- ***Programmable output enable and power-down feature***
- ***Programmable asynchronous or synchronous output enable***
- ***Programmable voltage level***
- ***PC / USB interface***
- ***Microsoft Windows compatible software***
- ***Programs all Cardinal FIPO products, as well as the high frequency LVDS and PECL Parts***
- ***Low Cost***

Instrument Part Number: **PG-3100**

Specifications:

Frequency Range:	1.000 MHz to 700.000 MHz
Acceptable Oscillator Packages:	Style 1 Full-Size 14 Pin DIP Style 4 Half-Size 8 Pin DIP 5x3.2 SMD (W/ Optional SC5320Adapter) 5x7SMD (With Optional SC2000 Adapter) Plastic (W/ Optional SC-2500 Adapter) 9.6x11.4 SMD (W/ SC3500 Adapter) 5x7 SMD (W/ SC4000 Adapter) *
Programmable Voltage Range	2.7 V 1 — 66 MHz 3.3 V 1 — 100 MHz 5.0 V 1 — 133 MHz 3.3 V 150 — 700 MHz *
Oscillator Programming Options:	Output Enable Function Power Down Operation TTL or CMOS Output Asynchronous / Synchronous Ability to reprogram oscillator blank to reuse the same part for two separate applications with different frequency and/or different output characteristics Dual frequency support (CPPD)
Power Supply	USB driven
Instrument Size:	6.5” x 10.5” x 2.5”
Oscillator Blank Part Numbers:	CPP CPPFX CPPL CPPE CPPD CPPV CPPHE * CPPHV *
User Interface:	USB Microsoft Windows 98SE, 2000, XP ZIF Socket User instructions Graphical Interface Helpful error messages Field upgradeable

Cardinal Components, Inc.
155 Route 46 West
Wayne, NJ 07470
Rev: E-090414-11

TEL: **(973)785-1333**
E-MAIL: **sales@cardinalxtal.com**
WEB: **http://www.cardinalxtal.com**

SCUSB Evaluation Kit

Operator's Instruction Manual

Cardinal Components, Inc.
155 Rt 46 West
Wayne, N.J. 07470
(973) 785-1333
www.cardinalxtal.com

Copyright 2003, Cardinal Components Inc.

All Rights Reserved

All attempts have been made to make the information in this manual complete and accurate. Cardinal Components Inc. is not responsible for any direct or indirect damages or loss of business resulting from inaccuracies or omissions. The specifications within this document are subject to change without notice.

SCUSB Evaluation Kit

Software License Agreement

All products (including the SCUSB Evaluation Kit, CD's software and documentation) are subject to the terms stated below. If you disagree with the terms please return the Product and documentation to Cardinal Components, postage prepaid, within seven days of receipt and Cardinal will provide you with a refund, less freight and normal handling charges.

1. You may not copy or reproduce all or any part of the Product, except as authorized in item 2 below. Removal, emulation or reverse engineering of all or any part of the Product constitutes an unauthorized modification of the Product and is specifically prohibited. Nothing in this license permits you to derive the source code of the software files that Cardinal has provided to you. Cardinal provides no other warranty to any person, other than the limited warranty provided to the original purchaser of this product.
2. You may make archival copies of the software files. All software files remain Cardinal exclusive property.
3. No license is granted to sell, license, distribute, market or otherwise dispose of any software files or other components of the Product.
4. Cardinal warrants the Product and the media on which the software files are provided to be substantially free from significant defects in material and workmanship under normal use for the period of twelve months from the date of delivery of the Product to you. In the event of a claim under this warranty, Cardinal's sole obligation is to replace or repair, at Cardinal's option, any Product free of charge.
5. Warrants and claims must be made in writing during the warranty period or within seven days of the observed defect, accompanied by evidence of satisfactory to Cardinal. Prior to returning any Product to Cardinal, you must obtain a Return Authorization (RMA) number and shipping instructions from Cardinal. Products returned to Cardinal shall be shipped with freight and insurance paid.

Table of Contents

SECTION 1.0 GETTING STARTED

1.1 Introduction
1.2 Software Installation

SECTION 2.0 JEDEC Creator

2.1 Running the JEDEC Creator Program

2.1.1 Entering PLL Frequencies
2.1.2 Selecting Divider Values
2.1.3 saving the file to disc

SECTION 3.0 Using the SCUSB Evaluation Kit

3.1 Introduction

3.2 Running the Reconfiguration Program

3.2.1 Writing a group to EEPROM
3.2.2 Reading a group from EEPROM
3.2.3 Clearing a group from EEPROM
3.2.4 Reconfiguring an Oscillator

3.3 Memory Map

3.3.1 Viewing the Hex File
3.3.2 Saving the Hex File

SECTION 4.0 Testing Oscillator Outputs

SECTION 1.0 GETTING STARTED

1.1 Introduction

The SCUSB evaluation kit is an assembled and tested PC Board That demonstrates the Multiple Output and Single Output series of reconfigurable oscillators.

The evaluation kit consists of a circuit board assembly with 6 SMA connectors, which allow probing and frequency measurement of the 6 available outputs. Also included with the evaluation kit is a smaller daughter board, which connects to a PC via a USB port. Using these 2 boards together allows communication and reconfiguration of all of the reconfigurable series oscillators. The kit can also be configured to interface with a microcontroller through the I^2C connector for stand-alone operation.

The Windows® 98SE/ME/2000/XP compatible software provides a user-friendly interface to demonstrate the features of the Multiple Output oscillators.

With optional adaptor sockets, the 14 pin SMT multiple output and the 8 pin SMT single output oscillators can be reconfigured.

Equipment supplied with the SCUSB Evaluation Kit.

Test board with attached communications daughter board.
USB cable
Software CD for use on a PC (including all necessary USB drivers)

Required Equipment.

Compatible PC running Windows 98SE/ME/2000/XP
Minimum screen resolution 1024 x 768
Available USB Port

Optional Equipment

SC3600 Socket (used to reconfigure the 8 pin Single Output SMT oscillator)
SC3700 Socket (used to reconfigure the 14 pin Multiple Output Smt Oscillator)

1.2 Software Installation

Insert the enclosed CD into the CD Rom drive. Run the Setup file and install to the directory of your choice.

This installation will install the SCUSB reconfig software and also will load the JEDEC Creator program.

SECTION 2.0 JEDEC Creator

2.1 Running the JEDEC Creator Program

Note: If you do not wish to create JEDEC files you can skip this section and proceed to the Using the SCUSB Evaluation Board.

From the desktop, click on the JEDEC Creator Icon.

The program can also be run by double clicking JedecCreator.exe from the directory from which it was loaded during installation.

The Options screen should now be visible.

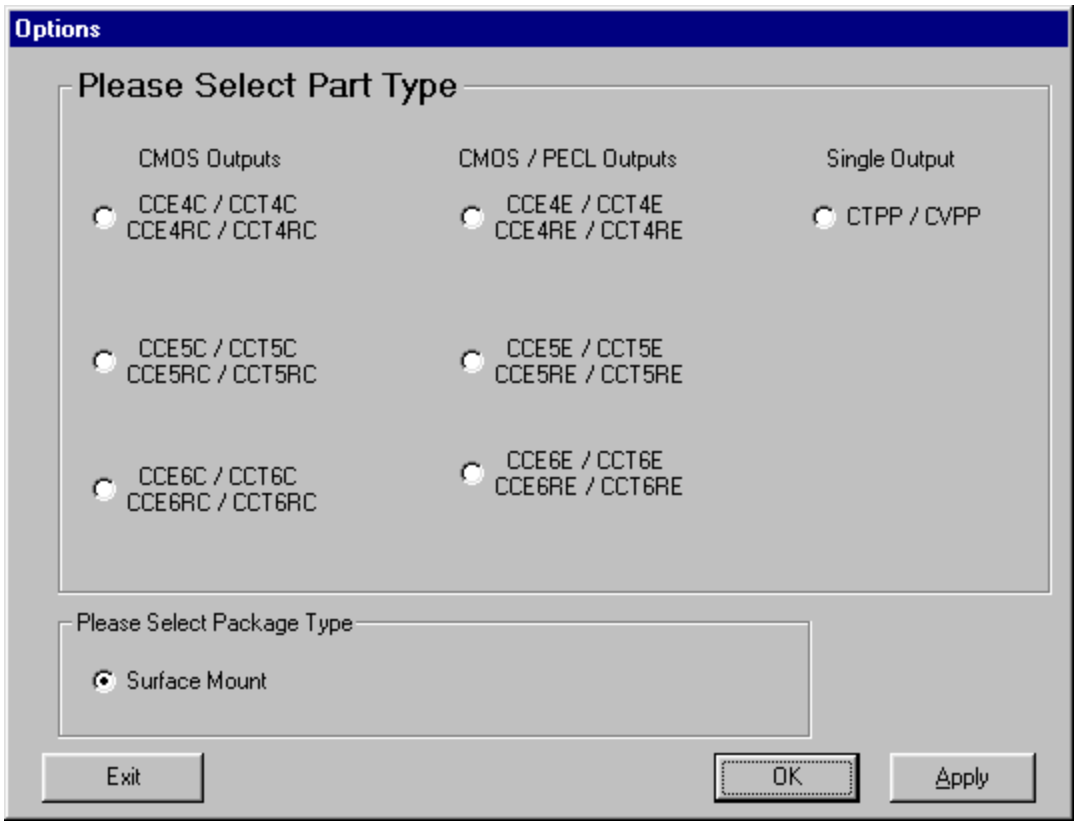

Please select the type of part to be programmed and package type. Select OK when ready.

The main screen should now be visible.

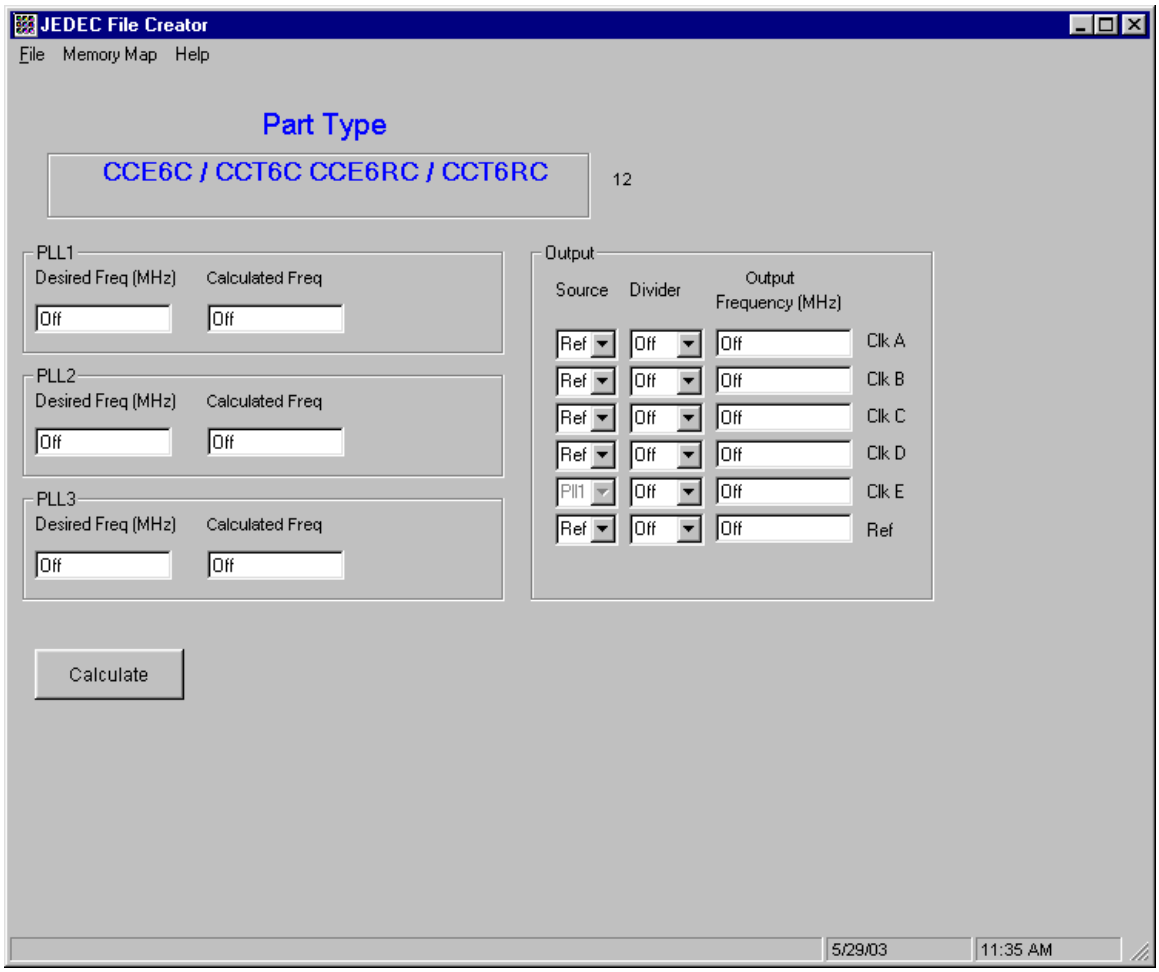

2.1.1 Entering PLL Frequencies

The first step is to enter a PLL frequency. Allowable PLL frequencies are 100 MHz to 400 MHz.

Note: The calculation of a PLL frequency is very complex. Not all frequencies have solutions. If a PLL frequency cannot be calculated, an error message will be displayed.

Suppose we need output frequencies of 155.52 MHz, 38.88 MHz, 53.125 MHz and 106.25 MHz. Since 155.52 MHz can be divided by 4 to get 38.88 MHz and 106.25 can be divided by 2 to get 53.125, we will be using 155.52 and 106.25 as our PLL frequencies. We can now enter PLL 1 as 155.52 and PLL 2 as 106.25. Enter these frequencies into the PLL1 and PLL2 box and hit the Calculate button. Notice that as we enter new numbers the Calculate button turns green indicating that we have made some changes. The screen should look like this.

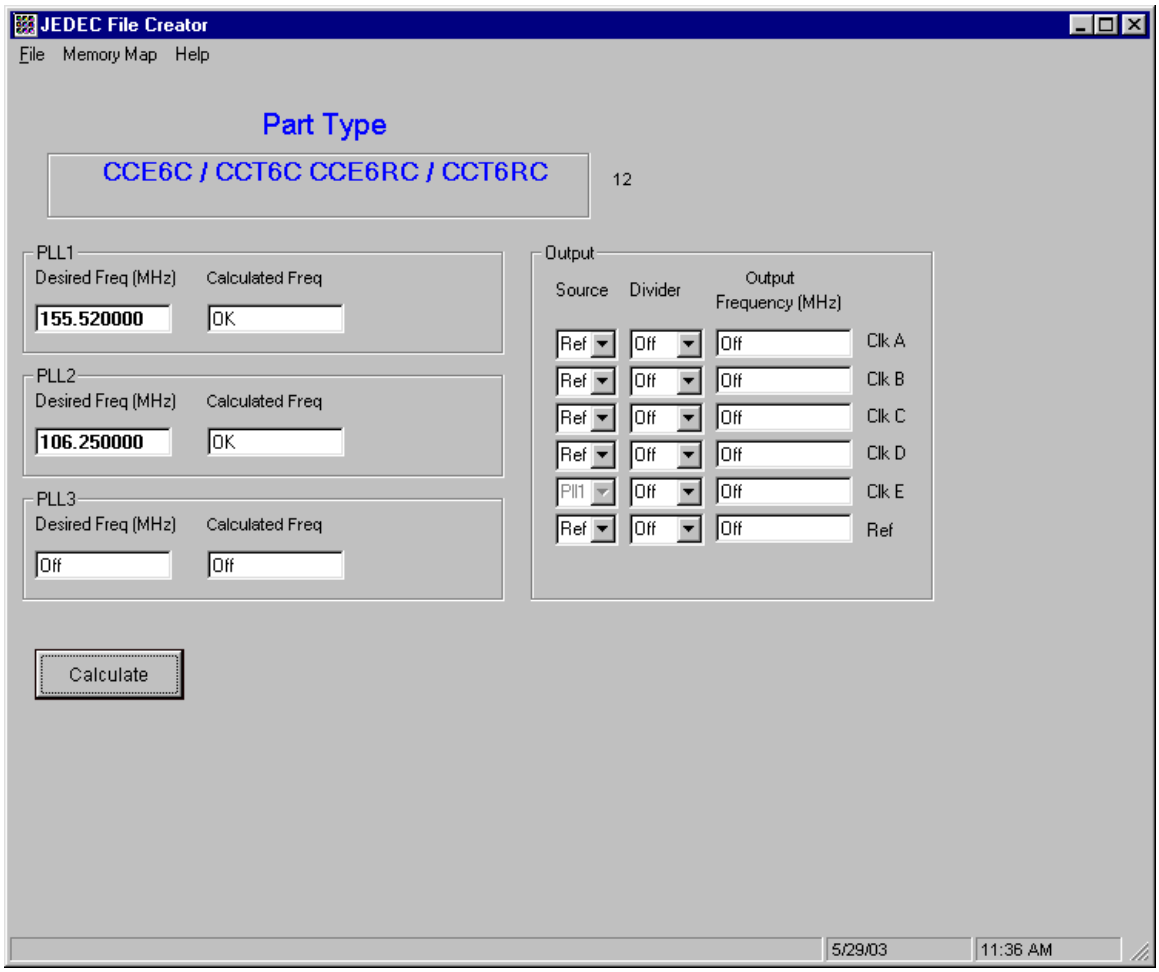

The OK in the Calculated Freq box indicates that the program has found acceptable values for the PLL frequency and we can proceed to the next step.

2.1.2 Selecting Divider Values

One of our desired output frequencies is 155.52 MHz. Lets setup that frequency for Output A.

Under source for Clk A, click on the drop down box. A choice of possible source frequencies are Ref, PLL1, PLL2, PLL3. The Ref or Reference frequency can be used as a source instead of a PLL frequency. The Ref frequency is determined at startup when the part

was selected. If you look at the Main Screen, you will see a number next to the Part Type. This is the Ref Frequency in MHz for this setup.

Lets select PLL1 as the source for Clk A. Next lets select a divider for Clk A. Since we want 155.52 as an output, our divider will be 1. You can select divider values from 1 to 127. Click on the Calculate button and the screen should look like this.

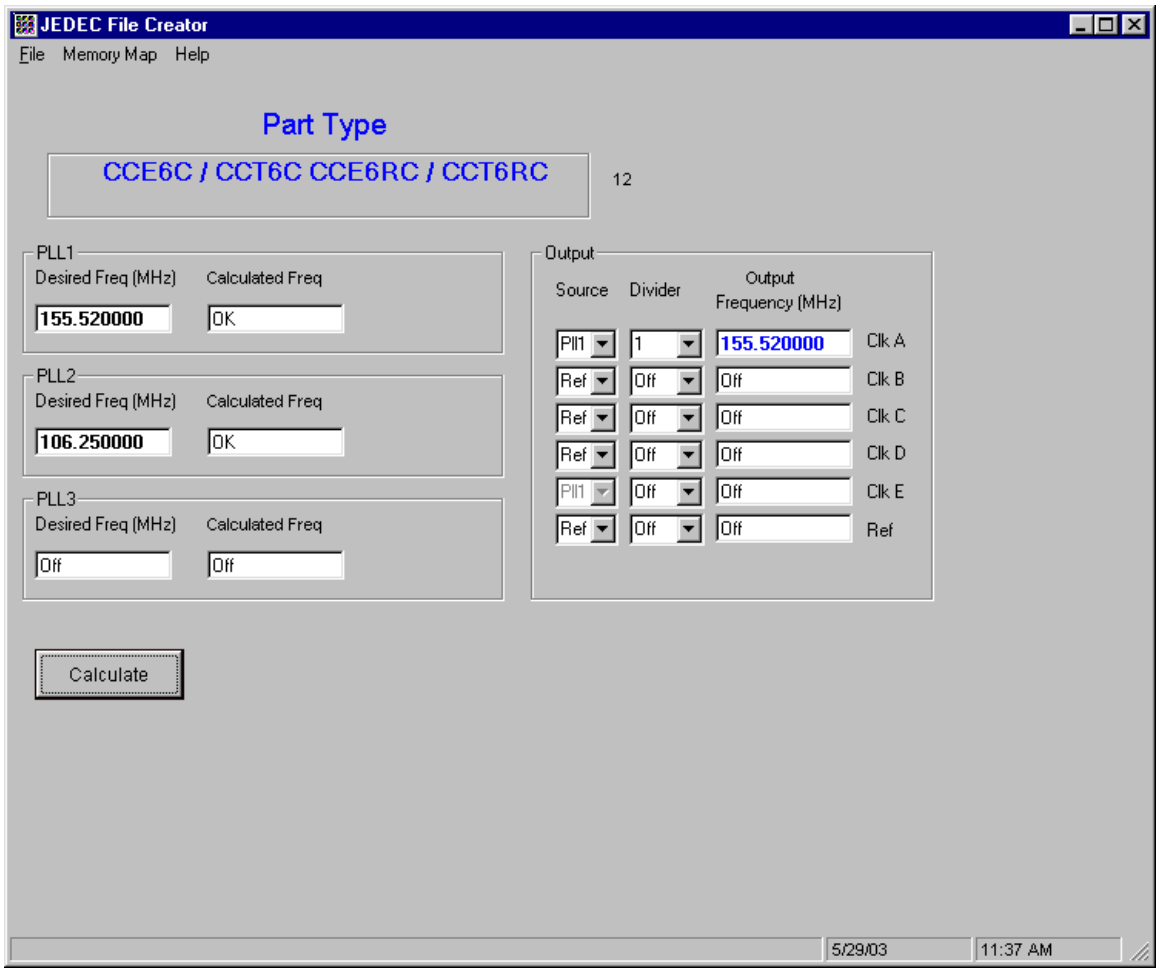

You have just setup Clk A for 155.52 MHz.

Lets setup Clk B. Since we want 38.88 MHz as Clk B, click source B dropdown box and select PLL1. Click Divider B dropdown

box and select 4. Click the Calculate button. You have just setup Clk B for 38.88 MHz.

Lets setup Clk C and Clk D.

Click source C dropdown box and select PLL2. Click Divider C dropdown box and select 2.

Click source D dropdown box and select PLL2. Click Divider D dropdown box and select 1.

Click the Calculate button.

The screen should look like this.

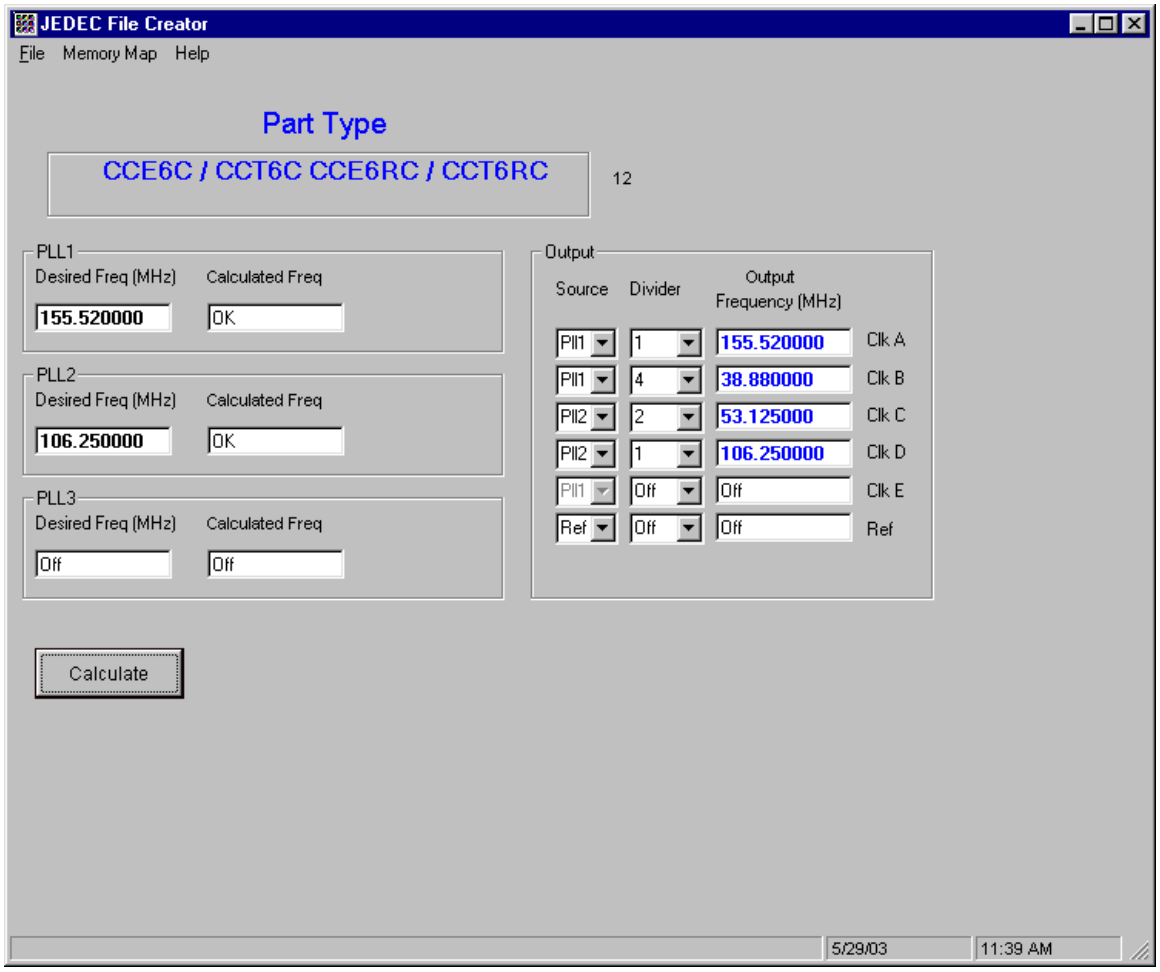

You are now ready to create the JEDEC file.

2.1.3 Saving the file to disc.

If all looks good it is time to save the file to disc.

From the File dropdown box, select Save As.

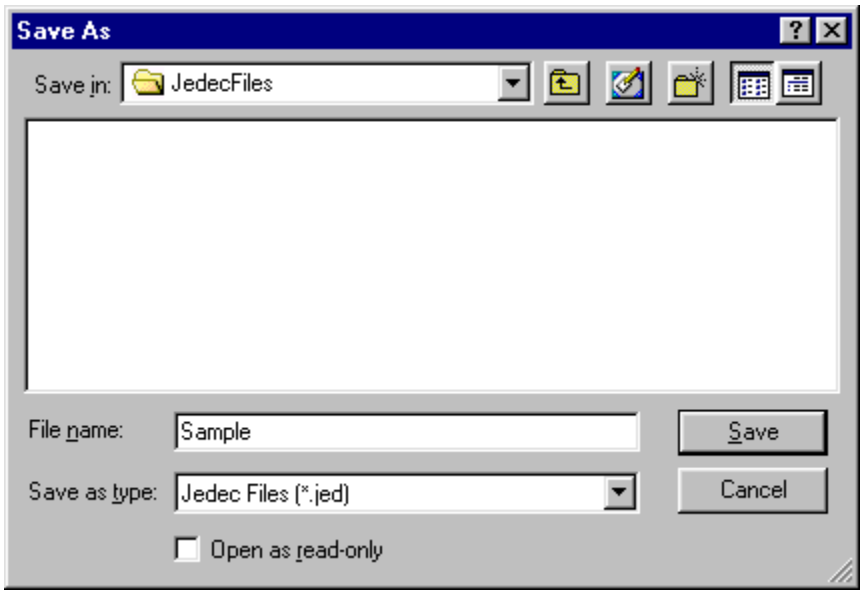

Enter a file name and click on the Save Button

The JEDEC file is now created.

SECTION 3.0 Using the SCUSB Evaluation Kit.

3.1 Introduction

The SCUSB Evaluation Board is designed to illustrate how to reconfigure the Multiple Frequency Output and Single Frequency Output family of oscillators from Cardinal Components.

The SCUSB Evaluation Board consists of 3 basic components.

The daughter board, which is responsible for USB communications to the PC and converting to I^2C Protocol used by the oscillator and the onboard EEPROM.

The onboard EEPROM, which can store up to 100 different JEDEC configurations that can easily be transferred to the reconfigurable oscillator.

The 6 test SMA connectors, which can be used for frequency measurement.

3.2 Running the Reconfiguration Program

Lets start by running the SCUSB Evaluation Reconfiguring Program.

From the desktop click on the MIPO icon.

Make sure that the SCUSB board is plugged into the USB Port on your PC.

The startup screen should look like this.

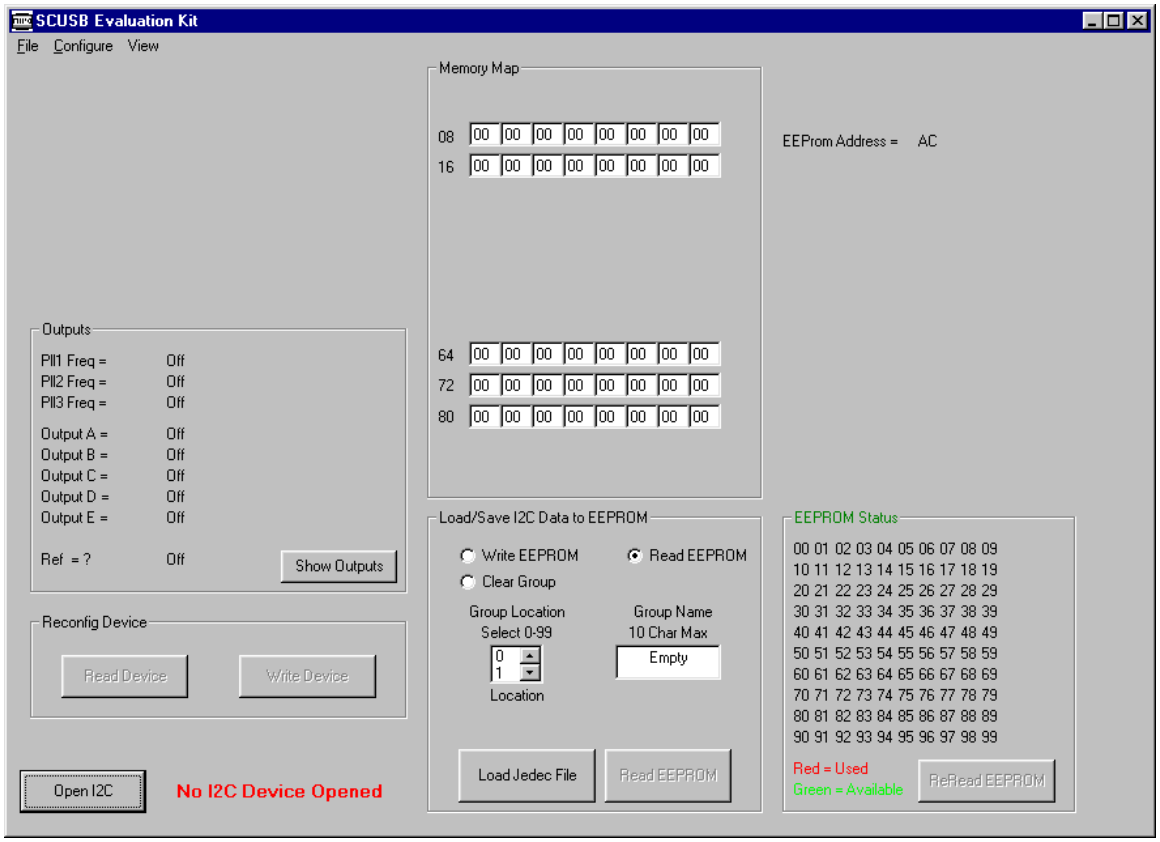

Click on the Open I^{2}C button.

If the USB drivers were installed correctly, the screen should look like this.

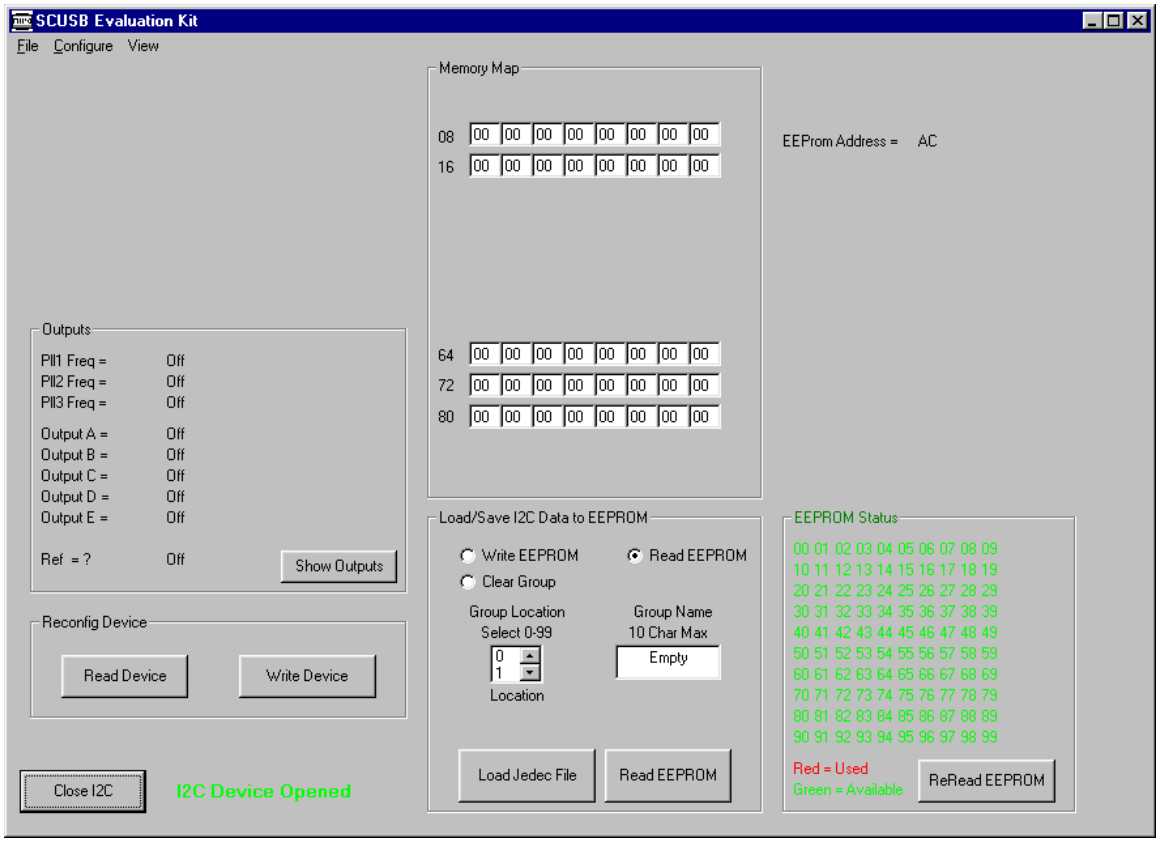

Notice the I^{2}C Device Opened text at the bottom left of the screen.

This means that we have a connection to the Eval board and it is ready to use.

Lets load a JEDEC file. We will use the example file called Sample.
Click the Load Jedec File button.
A dialog box will open. Select the file to load then click Open.

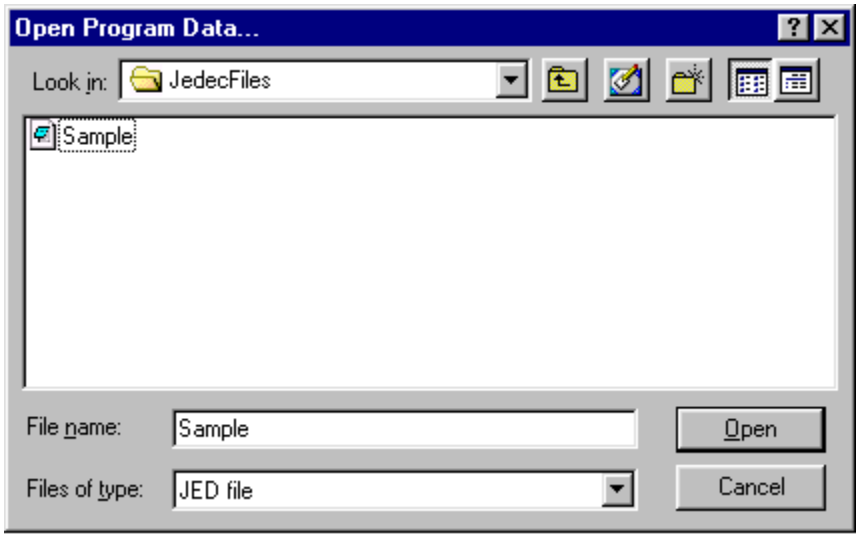

The screen should look like this.

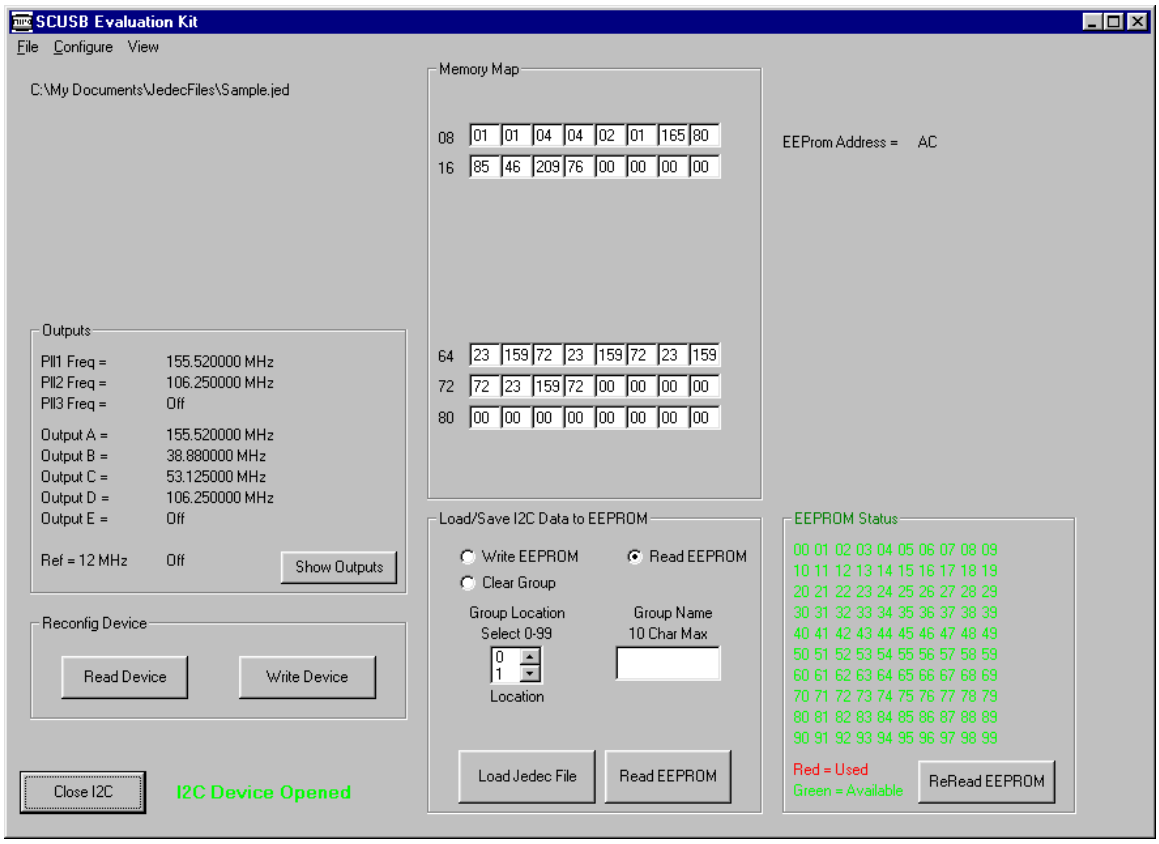

The screen shows us a few things that should be noted. The first thing is that the Output section displays the 2 PLL frequencies we created and the 4 output clocks we also created. Also shown in the center of the screen is the memory map for the JEDEC file.

3.2.1 Writing a group to EEPROM

First either click on one of the green numbers under the EEPROM Status box, or from the group location dropdown box, select a number from 0 to 99. This is the location that will be used to store the Sample file data. Next, in the Group Name box, enter a name that you would like to call this setup. We will use Sample for our example. Lets choose group 20. Click on the green 20 in the EEPROM Status box. As you can see, the Group Location dropdown box changes to 20. Now lets click on the Group Name box and type in Sample. Next click the Write EEPROM Option button. The Write EEPROM button should be visible. Click the Write EEPROM button.

A Dialog box pops up asking if you want to OverWrite the existing group name and number.

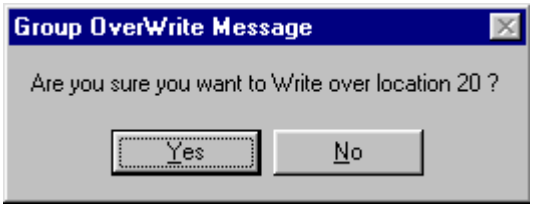

Selecting Yes will prompt another Dialog Box. This gives you a second chance to choose to OverWrite. Once the program writes to the EEPROM, there is no going back.

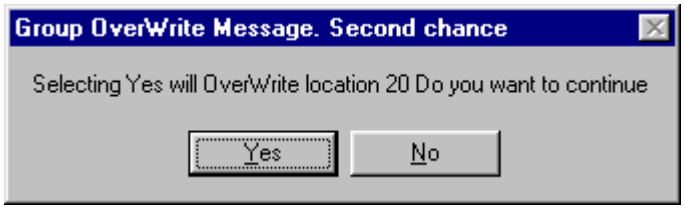

In a few seconds the EEPROM will be programmed and the number 20 will change from green to red, indicating that that location is in use.

If all went well, the screen should look like this.

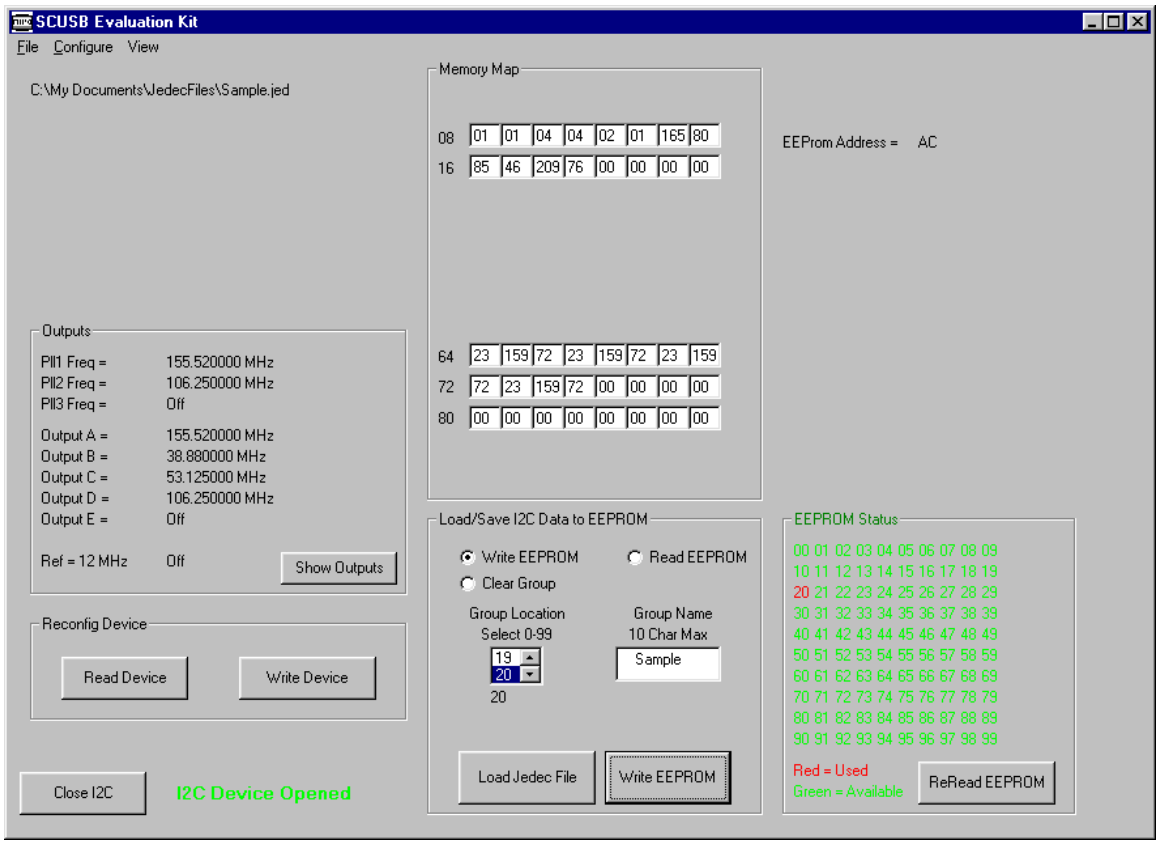

Lets create another sample JEDEC file to show the ease of reconfiguring. This file will contain a PLL of 100 MHz and 4 output clocks. 5 MHz, 10 MHz, 20 MHz, and 50 MHz. We can use the JEDEC Creator program to do this. Follow the steps for creating a JEDEC file and create the new JEDEC and call it Sample2.

Click the Load Jedec File button.

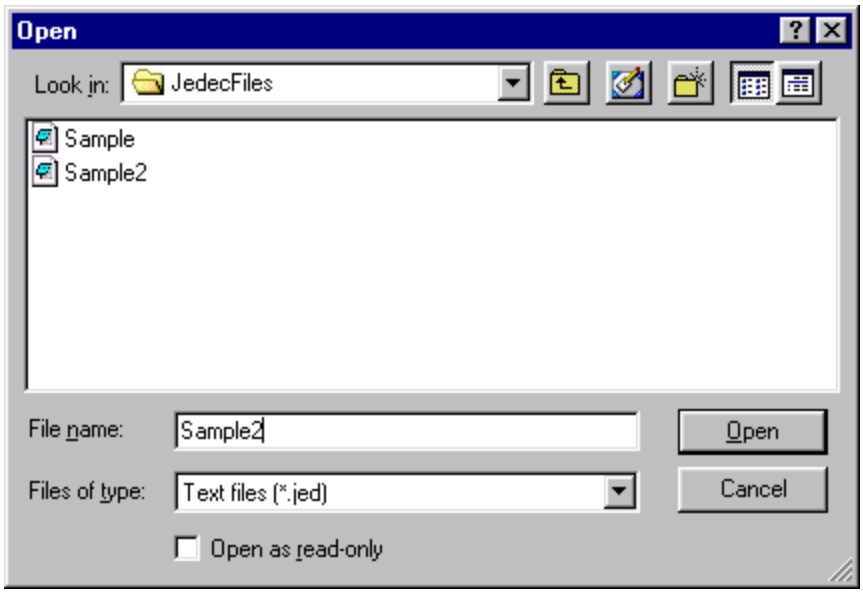

Select Sample2 and click Open.

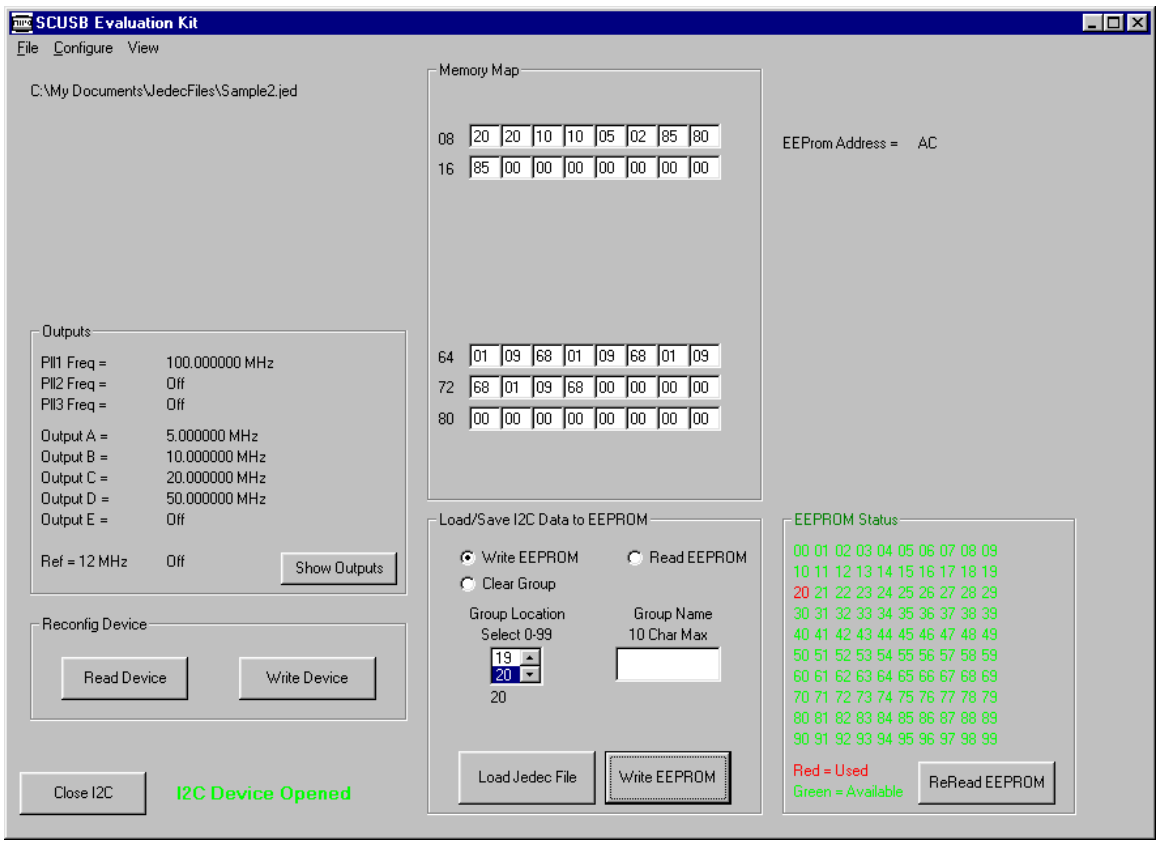

Lets save this configuration to location 30.

Just as before we will click on the green 30.
Enter a name in the Group Name Box. (Sample2)
Click the Write EEPROM Option button.
Click Write EEPROM.

The Sample2 configuration is now loaded into the EEPROM at location 30.

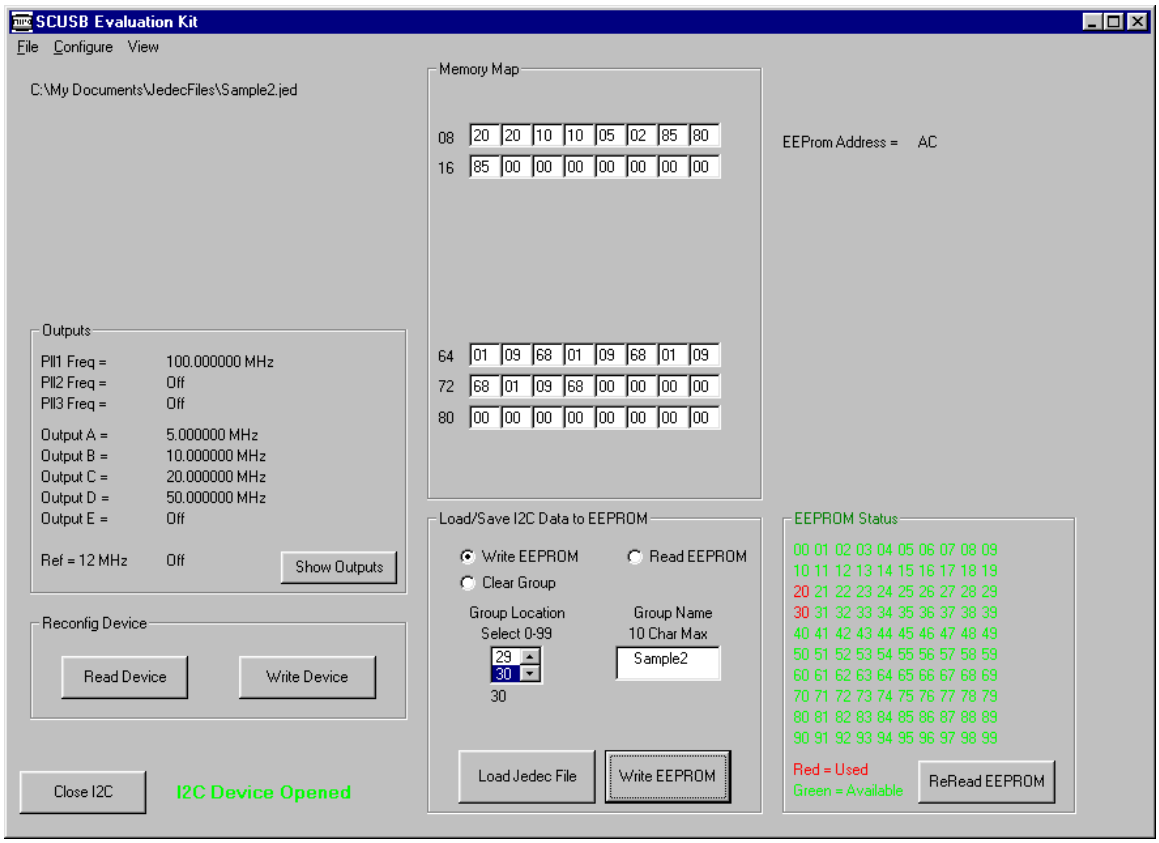

3.2.2 Reading a group from EEPROM

Reading a group from EEPROM is a simple process. Click on a number from the EEPROM Status box that is shown in red. Select the Read EEPROM option button. The Read EEPROM button should be visible. Click on the Read EEPROM button and the new values should be displayed in the Outputs box. Also the Memory Map should show the new values and the group name should appear in the Group Name text box. If there are no numbers shown in red, make sure the I^2C device is open or that the EEPROM is not blank.

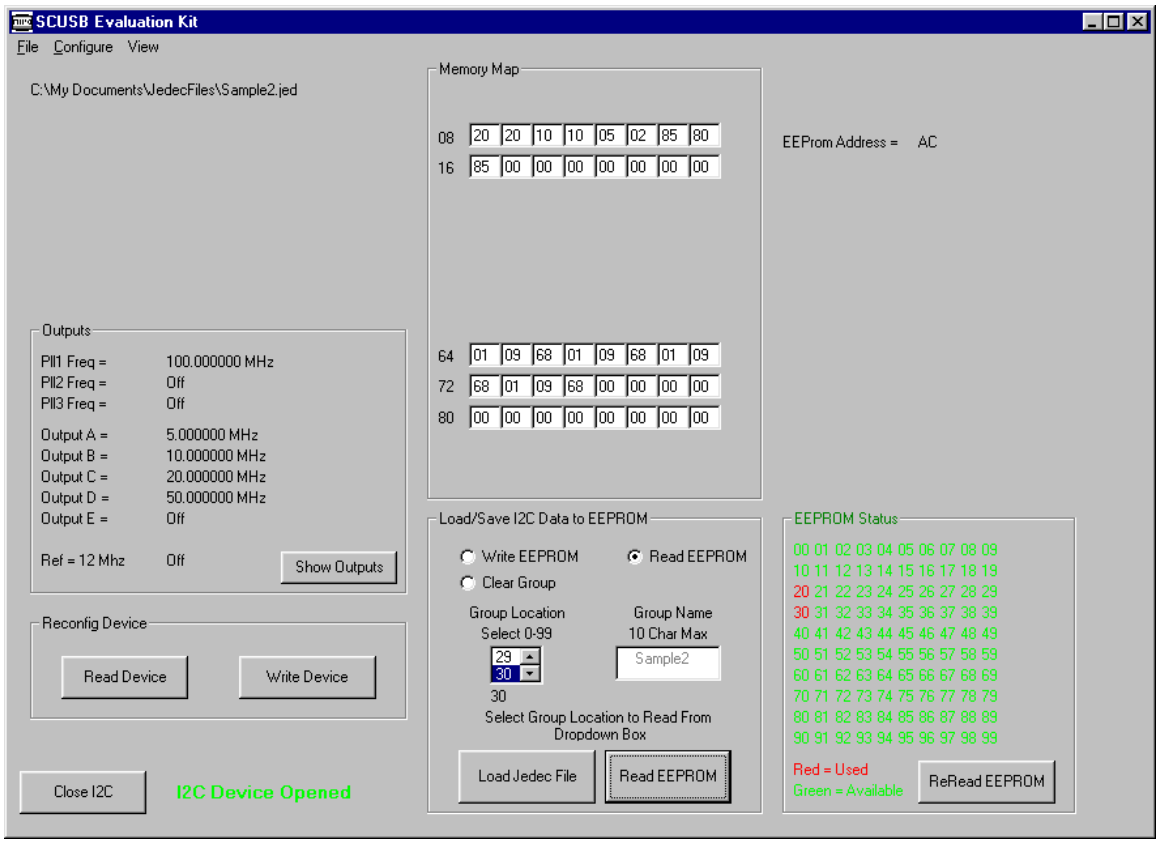

3.2.3 Clearing a group from EEPROM

Clearing a group from the EEPROM is the same procedure as Writing or Reading. First click on the group number that you want to clear. A Dialog box appears asking if you really want to clear that Group Location and Group Name.

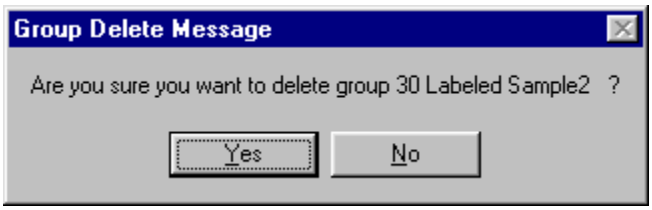

Clicking yes, will clear that Group and return the Group Number back to green indicating that it is empty.

3.2.4 Reconfiguring an Oscillator

Select the data you want to configure the oscillator to by either clicking on the Load Jedec File button and selecting a Jedec File from the list or click the Read EEPROM option button and select a group from the EEPROM Status box.

Check the Outputs box and make sure that the correct values are shown. Insert an oscillator in the test socket and click the Write Device button. After the blue status bar completes, click the Read Device button and verify that the part was reconfigured correctly.

If all the Outputs read Off, check that the part is inserted into the socket properly. Also make sure that the SCUSB board is powered. If the green light is lit on the daughter board then power is applied and the communications should be OK. If a problem still exists, unplug the Eval Board and reconnect. Click the Close I2C button and then click the Open I2C button and see if that solves the problem.

3.3 Memory Map

3.3.1 Viewing the Hex File

When a data file is loaded into the memory map, either from a JEDEC file or the EEPROM, a hex file is created. This file is the actual data file that is used for reconfiguring or writing to the EEPROM. This file can be used by a micro controller to reconfigure the oscillator in a circuit. To view the Hex file, click on view, then click view Hex file.

This is a typical Hex File.

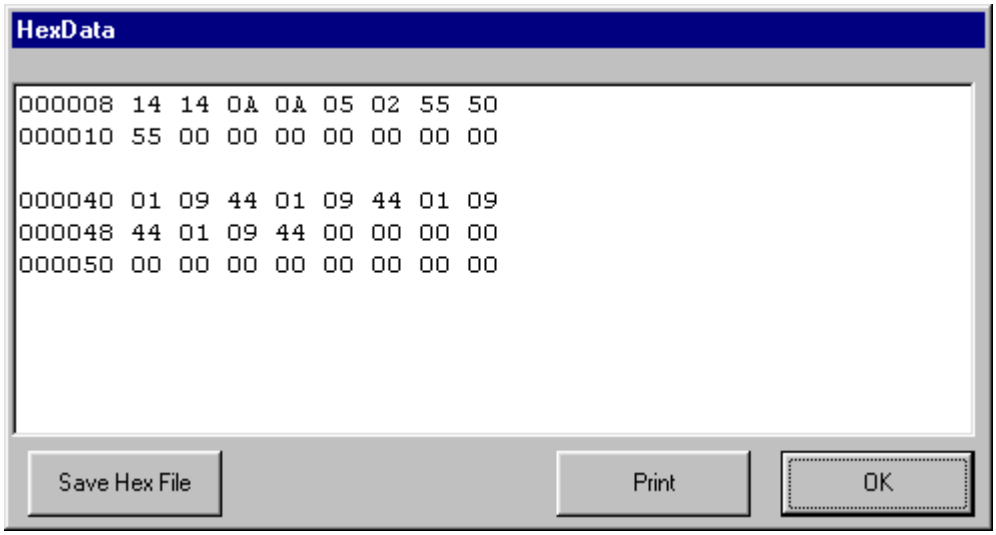

Click Save Hex File to save the file to disc.
Click Print to print the file to your printer.
Click OK to close the window.

3.3.2 Saving the Hex File

The Hex file can also be saved by clicking the view button and selecting Save Hex File.

4.0 Testing Oscillator Outputs

Testing the different output frequencies can be done with a frequency counter. Set the counter for a 1 Meg Ohm input impedance and probe the desired output SMA connector. If a PECL part is being tested, set the counter for 50 Ohm impedance or install jumpers 10 and 11. (See Photo)

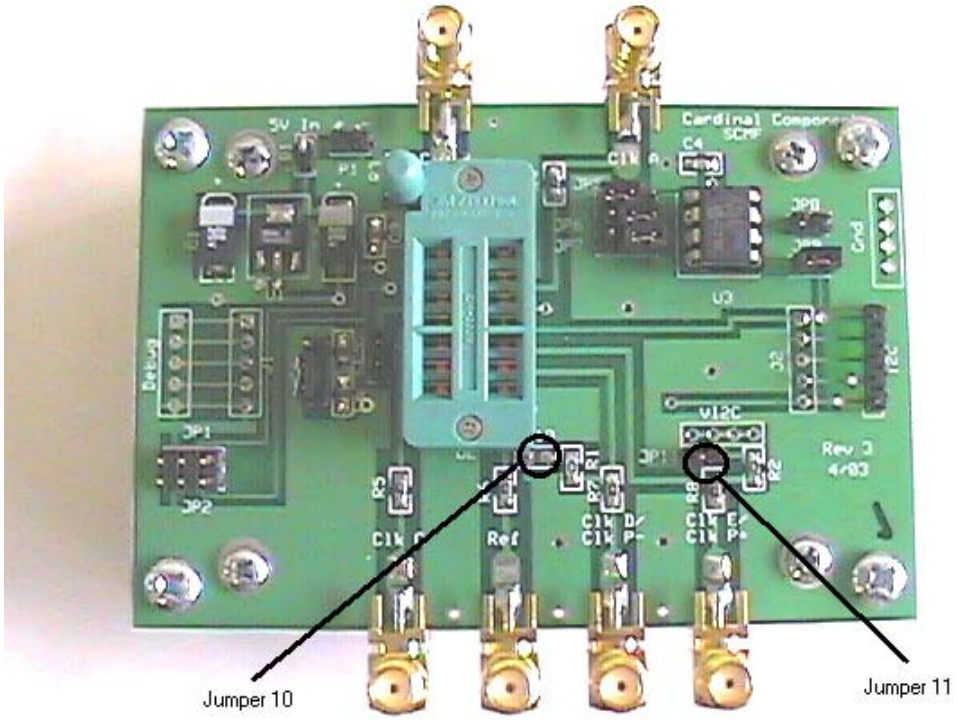

TEMPERATURE TEST

SYSTEM 8800

Simultaneous temperature testing of up to four different device frequencies, easy to use and surprisingly affordable!

QUADROTEMP™
TESTING SOFTWARE

CARDINAL COMPONENTS

WITH INNOVATIVE TECHNOLOGY that is generations ahead of the competition, the Temperature Test System 8800 facilitates testing and introduces new levels of accuracy and dependability.

Features easy to execute QuadroTemp™ software and operator friendly intuitive performance. Simple to use, requires no advanced training, surprisingly affordable and exceptionally reliable, while assuring superior output and data integrity.

Components

- **8800 Furnace with integrated computer**
- **Windows XP operating system**
- **QuadroTemp™ proprietary software**
- **Four (4) temperature test boards**
- **One (1) backplane board**
- **Two (2) Agilent power supplies**
- **One (1) frequency counter**
- **Versatile work station/storage rack**
- **Limited lifetime warranty**

QUADROTEMP™
TESTING SOFTWARE

Comes with a compact, versatile work station/storage rack that facilitates operations.

The Temperature Test System 8800 offers a choice of cooling options including liquid nitrogen and carbon dioxide, and testing capabilities from –55ºC to 125ºC, with a sweep rate to 8ºC/min.

The Temperature Test System 8800

Features

- Four (4) test boards per furnace
- Simultaneous temperature testing of up to four different device frequencies
- Multiple package styles per board
- Cooling options:
  - Liquid nitrogen
  - Liquid carbon dioxide
- Temperature test capability:
  - –55ºC to 125ºC test range
  - Sweep rate to 8ºC/min.

The Temperature Test System 8800

Capacity

- Up to 192 devices per test board
- Up to four boards per furnace
- Up to 768 parts per load
- Simultaneous testing of multiple devices
  - Full Size
  - Half Size
  - 9 x 14 (Plastic)
  - 5 x 7
  - 5 x 3.2
  - 3.2 x 2.5
  - plus other sizes

Simultaneous temperature testing of up to four boards per furnace, and four different device frequencies.

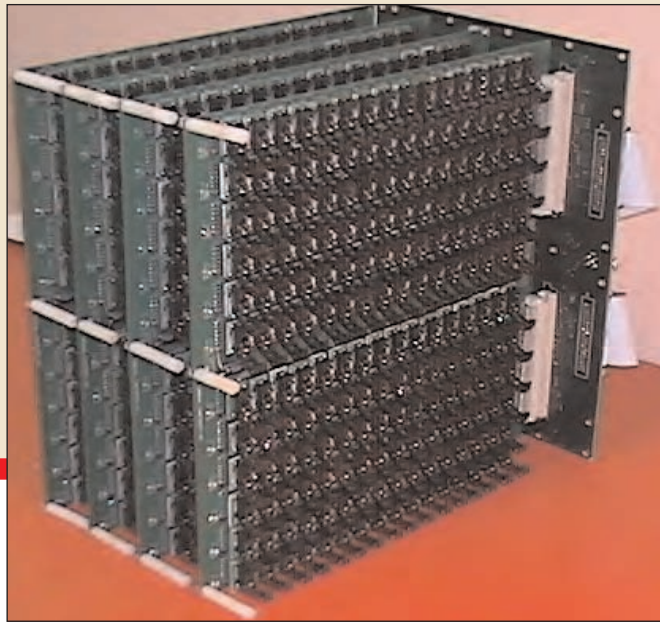

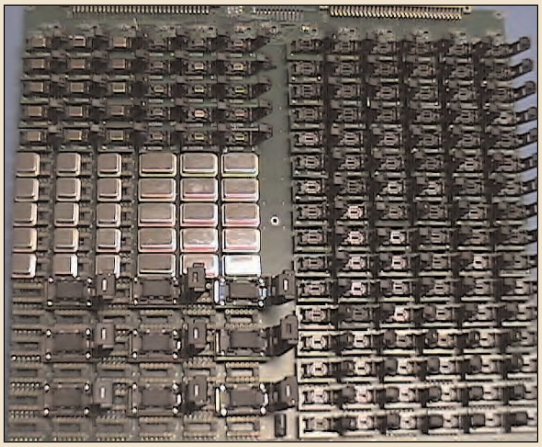

Temperature Test System 8800 accommodates multiple devices per board.

The Temperature Test System 8800

Analysis

Characterization

- **Cubic parameters**
  - **Maximum deviation**
  - **RMS deviation**
- **Automatic characterization of devices for AT cut oscillators**
- **Cut angle estimation**
- **PPM over two temperature ranges**
  - **Maximum / minimum**

The Temperature Test System 8800

Measurement Phase

Fully configurable

- **Frequency measurement range up to 160 MHz**
- **Selectable temperature sweep rate**
- **Selectable frequency and initial ppm tolerance for up to four different device types**

Reliable

- **Automatic initial check of devices**
- **No moving parts**

Durable

- **With continuous measurement capability**

Temperature Test System 8800 shown with front door removed. The system allows automatic characterization of devices for AT cut oscillators.

Screen Setup

At right: Main setup screen of QuadroTemp™ (selected for soak mode). Up to four boards of 192 devices can be tested. Up to four different device types can be tested on a single run.

Each device type is represented by a different color. The device type for an individual location is selected by a click with the mouse.

Whole columns or half boards of the same device type can be selected by a single click.

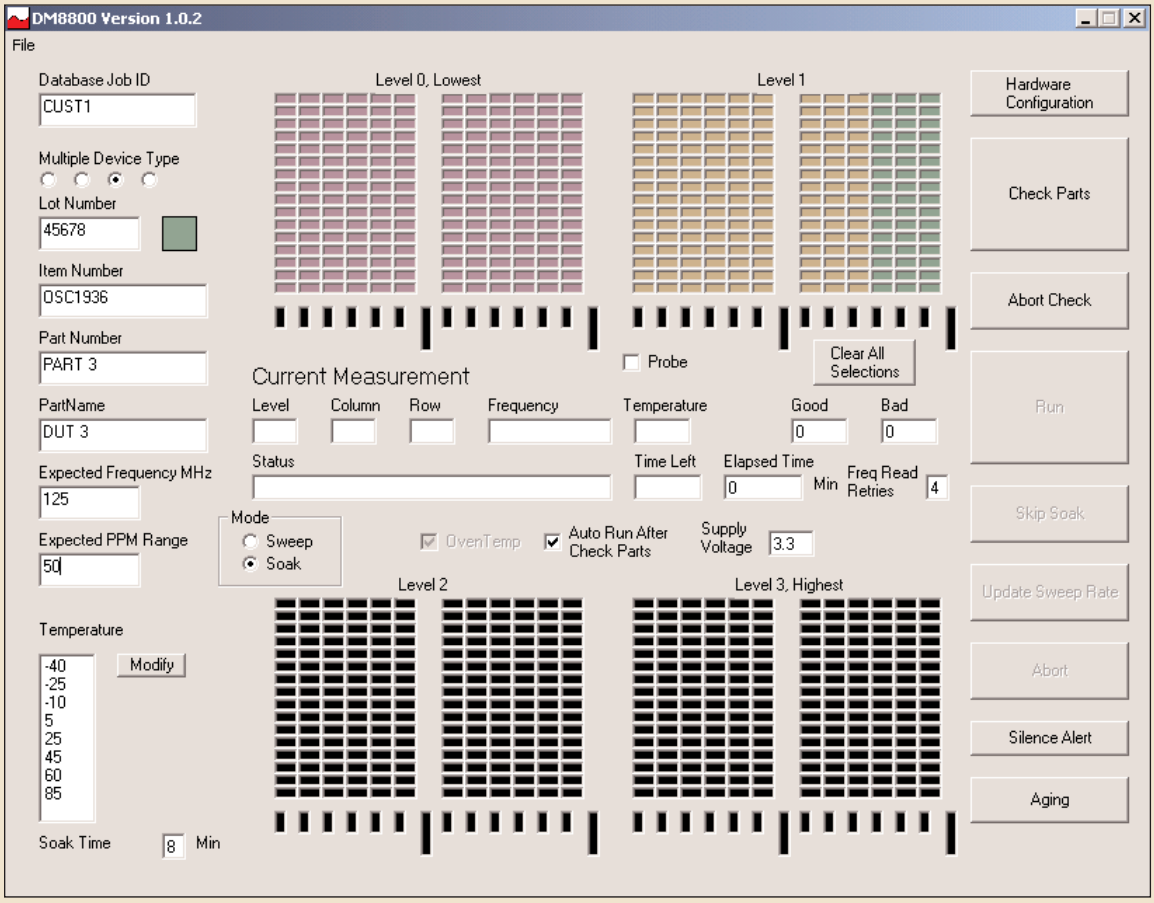

QUADROTEMP™ TESTING SOFTWARE

DUT Analysis

The results of the DM8800 are viewed by the DV8800 QuadroTemp™ software which allows for automatic grading of devices.

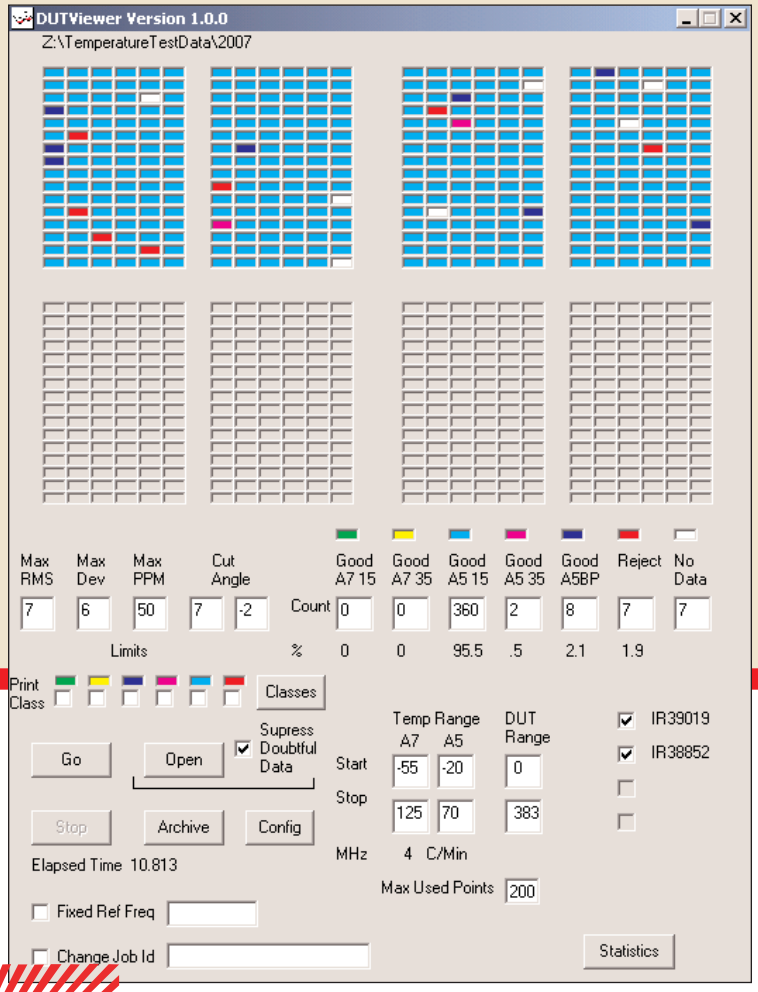

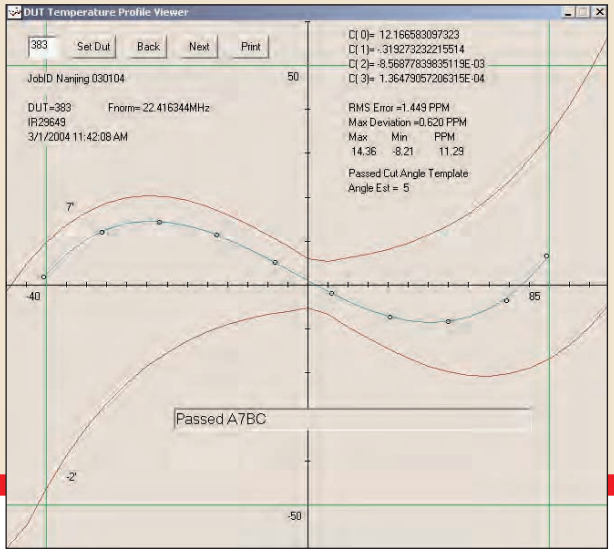

DUT Temperature Curve

The results of each device tested can be viewed by a single click on the device in the main screen, or the specific device number can be entered.

The Temperature Test System 8800

Capabilities

- **Archival of test data for re-analysis of data**
- **Printing of test data and analysis**
- **Rapid analysis phase:**
  - **All devices**
  - **Devices by type**
  - **Devices by DUT position**

The Temperature Test System 8800

Device Grading

- **Automatic categorization of devices for AT cut oscillators**
- **Grading characteristics for devices**
  - **Maximum allowed PPM**
  - **Maximum PPM deviation from cubic**
  - **Maximum PPM RMS deviation from cubic**
  - **AT cut angles limits**

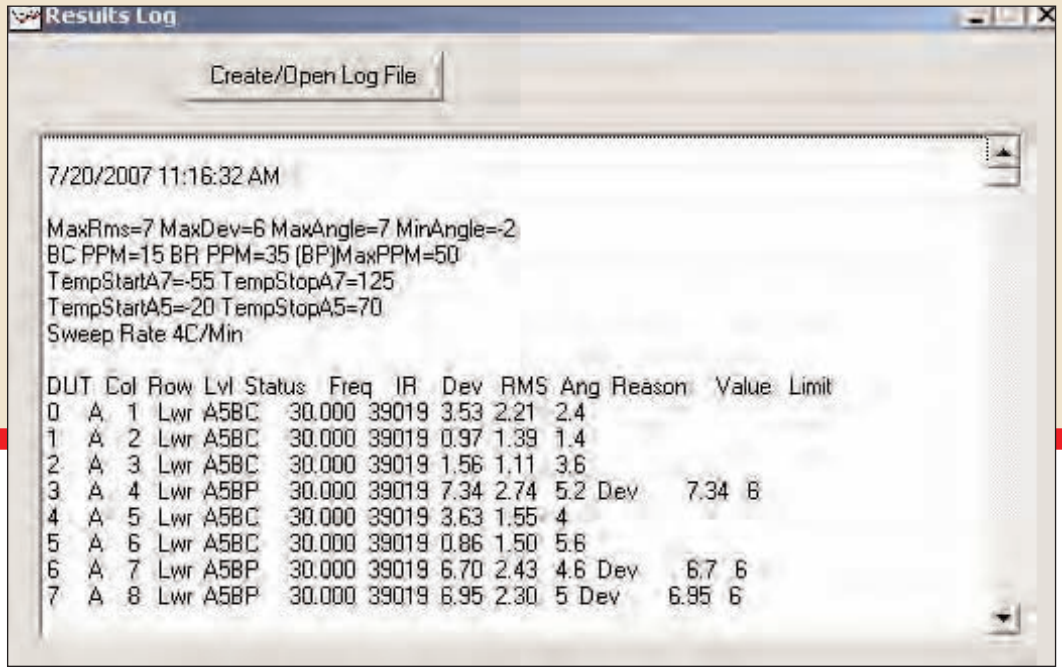

The results of the grading can be viewed and printed.

The Temperature Test System 8800

Reporting

- **Devices by DUT position order**
- **Devices by category**
- **Data export for statistical analysis**

The Temperature Test System 8800

Available Options

- **LVPECL testing**
- **LVDS testing**
- **TCXO compensation**
- **VCTCXO compensation**
- **Oscillator aging measurements and analysis**

Statistic results from the run can be shown.

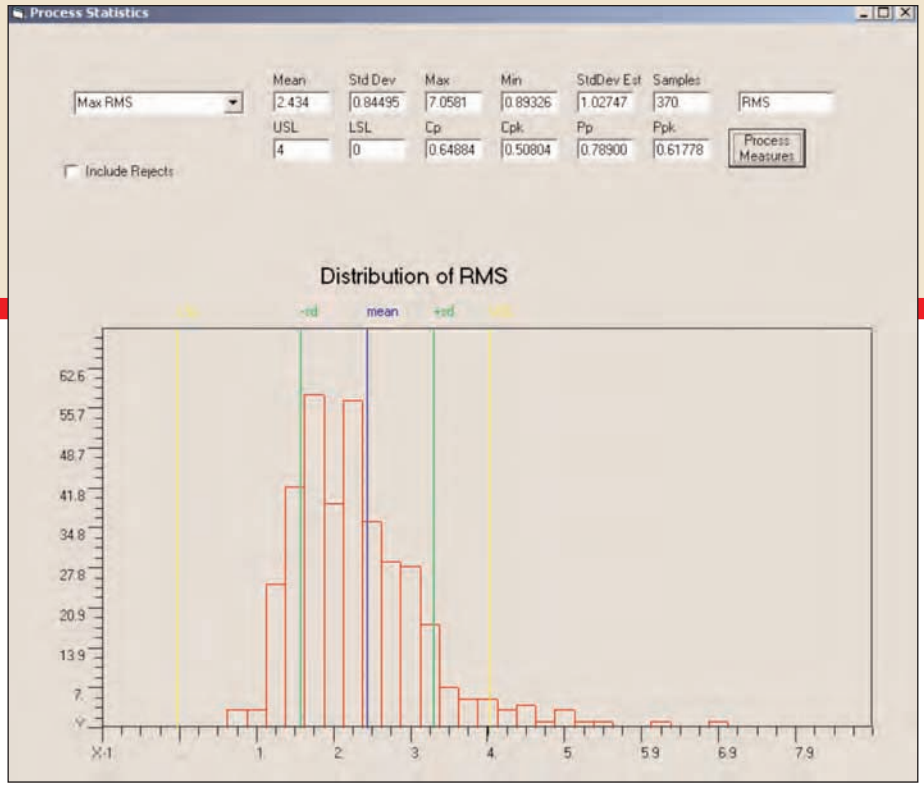

An extremely accurate and surprisingly affordable testing package!

CONTACT US TODAY FOR MORE INFORMATION OR TO PLACE YOUR ORDER!

CARDINAL

温度测试系统8800

可同时对四种不同频率器件进行温度检测，易于使用，令人惊讶的多种封装器件测试

QUADROTEMP
TESTING SOFTWARE

CARDINAL COMPONENTS

借助于超前的创新技术，温度测试系统8800测试便利并可达到高精度和高可靠性的新水平，易于实施QuadroTemp操作软件的特点，清晰直观的演示简单易用无须前期训练，令人惊讶的多种封装器件测试和极高的可靠性，可同时确保较多的输出和数据完整性。

组成：

- 带一体化电脑的8800炉
- Windows XP操作系统
- QuadroTemp专利软件
- 4个温度测试板
- 1个后背板
- 2个Agilent 供应电源
- 1个频率计数器
- 多用工作台/储存架
- 有限的终生质保

QUADROTEMP™
TESTING SOFTWARE

具有紧凑的多用途工作台/存储架，使操作更便利。

温度测试系统8800可提供冷却选择—液态氮和液态二氧化碳，测试能力从-55℃到125℃，扫描频率至8℃/min。

温度测试系统8800

特点

- 每个炉有4个测试板
- 可对四种不同器件频率同时进行温度测试
- 每个测试板有多样封装式样
- 冷却选择：
  液态氮/液态二氧化碳

- 温度测试能力：
  测试范围 -55℃到125℃
  扫描率：8℃/每分钟

温度测试系统8800

能力

- 每个测试板192个器件
- 每个炉4个板
- 每个负载768个器件
- 同时检测多种封装型器件

全尺寸 半尺寸

9 X 14 （塑料）

5 X 7

5 X 3.2

3.2 X 2.5

加其他尺寸

每个炉有4个板和4种不同频率器件可同时进行温度检测

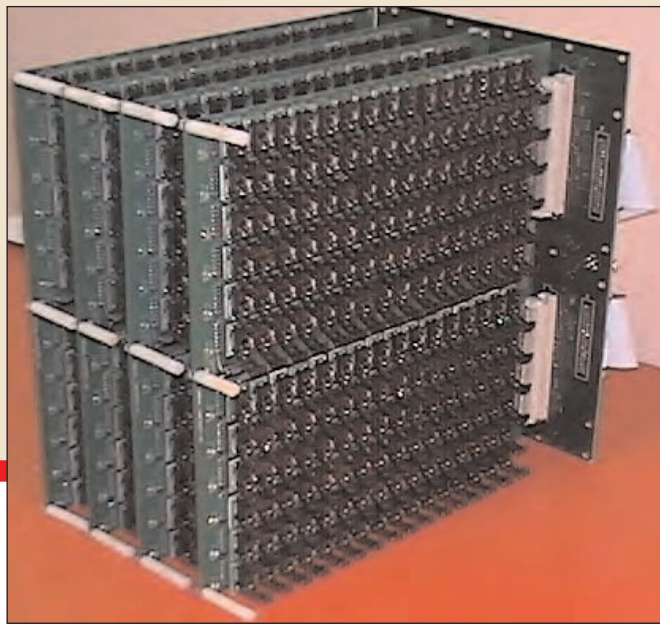

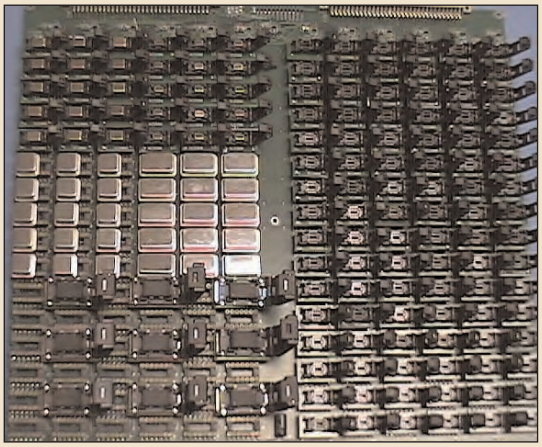

温度测试系统8800提供每个板内
多种封装型器件

温度测试系统8800

分析描述：

- 测试器件参数
  - 最大偏差
  - RMS偏差
- AT切振荡器件自动描述
- 切割角度预算
- 最大/最小温度范围PPM

温度测试系统8800

测量阶段
完全配置

- 测试频率范围上至160MHz
- 可选择温度扫描频率
- 对上至四种不同封装类型的器件，可选择频率和最初PPM偏差

可靠性

- 自动地最初器件检查
- 不移动器件

耐用性

- 具有持续测量的能力

前板移开，温度测试系统
8800显示，该系统允许
AT-CUT振荡器件自动描述。

屏幕设定

在右面：Quadro Temp为主设定屏幕（选择浸透方式）

多达4个板，每个板可装192只器件能被测试

多达4种不同类型器件能单个运行测试

每个器件类型通过不同的颜色代表

整个纵队或半板相同器件类型可通过单击鼠标来选择

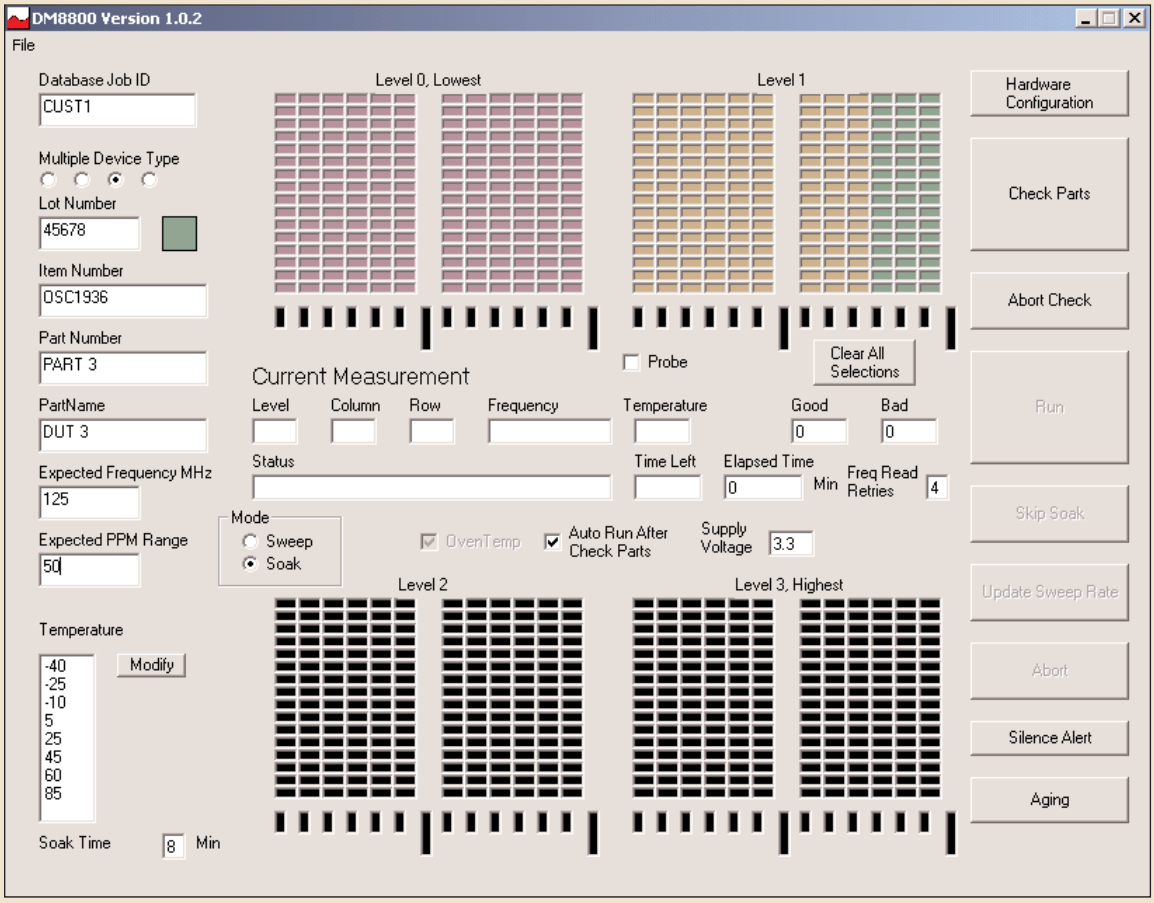

QUADROTEMP
TESTING SOFTWARE

DUT分析

DM8800结果可通过DV8800 QuadroTemp™温度软件中观察，该软件可允许器件自动分级.

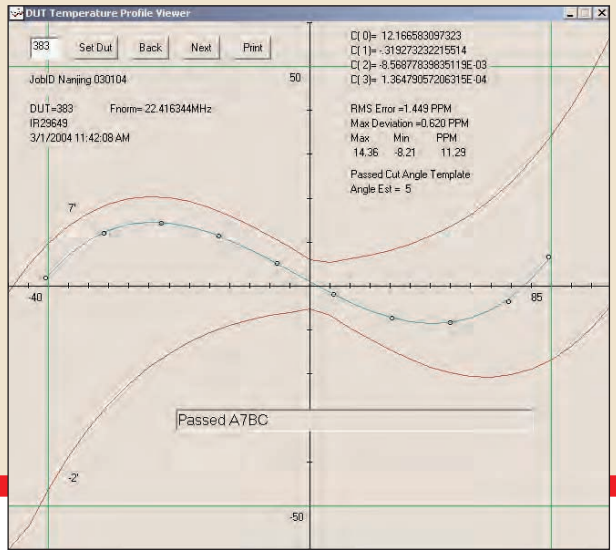

DUT 温度曲线

每一个测试器件的结果能通过主显示器上的特定曲线或输入专门器件号码查看

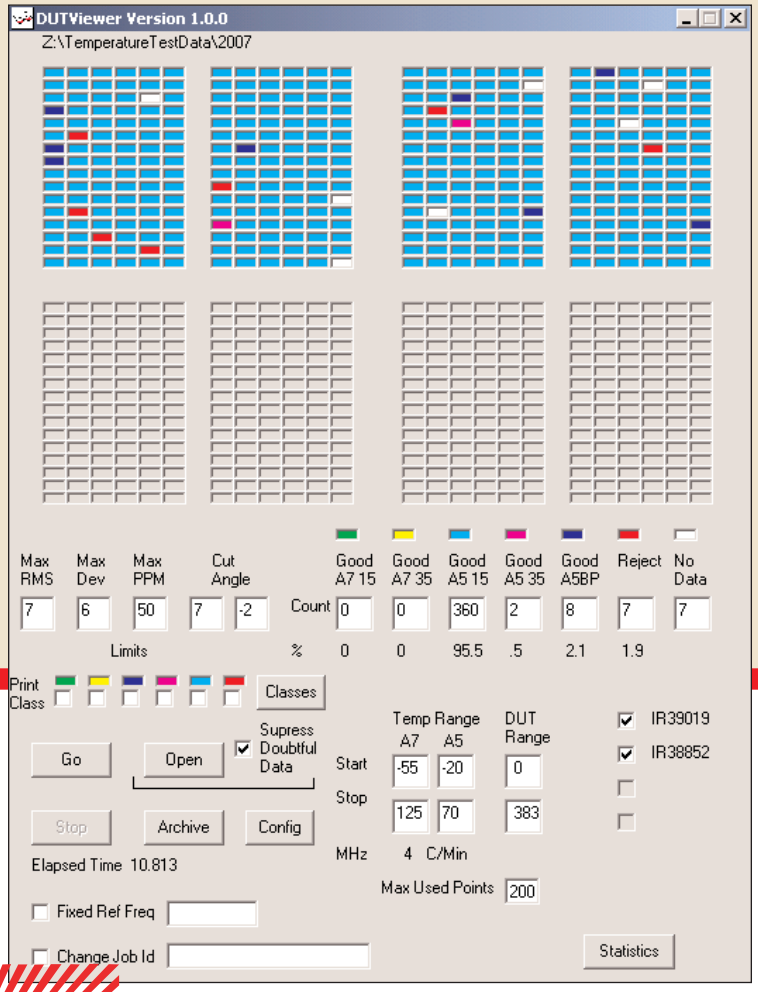

温度测试系统8800

能力

- 为了再分析数据，建立测试数据挡案
- 测试数据和分析打印
- 快递分析阶段
  - 所有器件
  - 器件类型
  - DUT器件位置

温度测试系统8800

器件分析

- AT切振荡器件自动分类
- 器件分级特征
  - 最大允许PPM
  - 来自立方体（测试器件）PPM偏差
  - 来自立方体（测试器件）RMS偏差
  - AT切角度限度

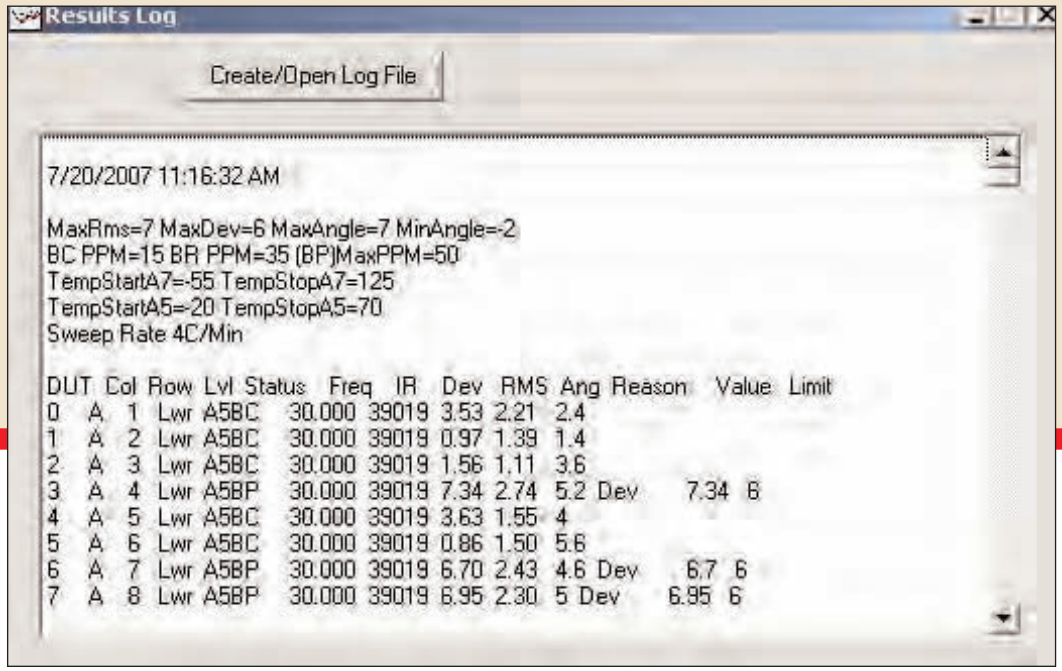

分类结果可以显示和打印

温度测试系统8800

报告

- DUT位置顺序器件
- 分类器件
- 统计分析数据输出报告

温度测试系统8800

可得到的选择

- LVPECL测试
- LVDS测试
- TCXO补偿
- VCTCXO补偿
- 振荡器老化测试和分析

能显示来自运行的统计结果

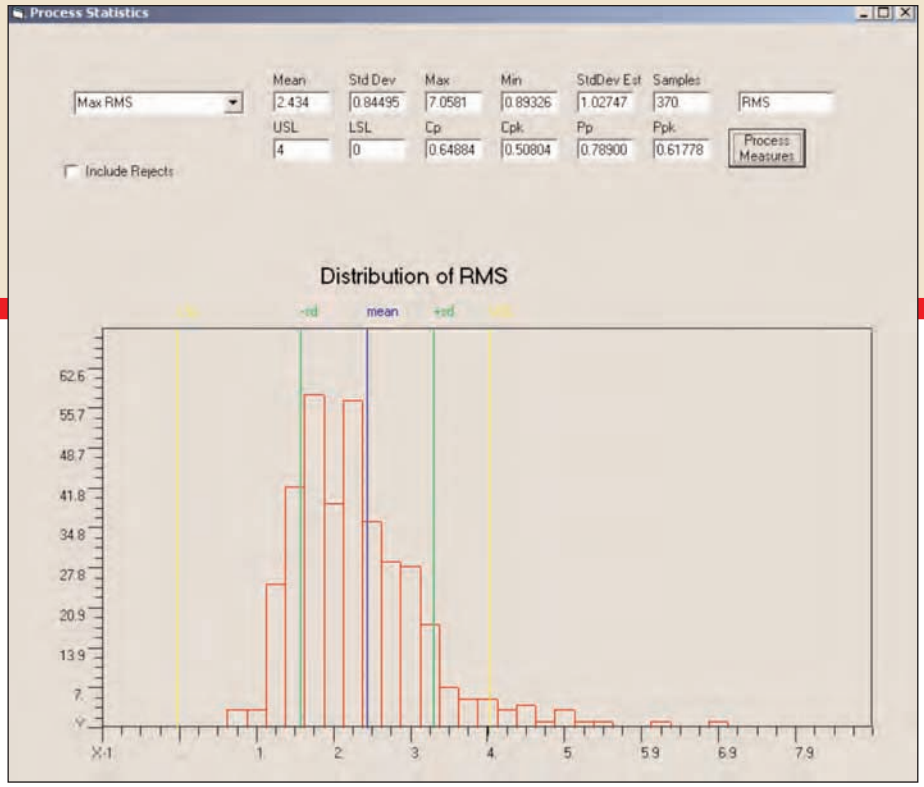

极高的精度
令人惊讶的多种
封装测试

一个极度精确和令人惊讶的多种封装测试
今天联系我们可了解更多信息或放你的定单

Appendix

Page Number	Appendix	Description
A-1	**DIP**	Dip Package Drawings
A-2	**Tape & Reel**	Tape & Reel Specification
A-3	**Solder Profile**	Solder Profile
A-4	**FIT**	Failure In Time & Mean Time To Failure
A-5	**ISO**	ISO Certificate
A-6	**ROHs**	ROHs Material Declaration
A-7	**C of C**	General C of C
A-8	**Distribution**	Authorized Distributors
A-12	**Quartz**	Principles of Quartz
A-15	**Glossary**	Terminology

Dip Oscillator Package Dimensions

Style 1 Full Size 14 Pin Dip

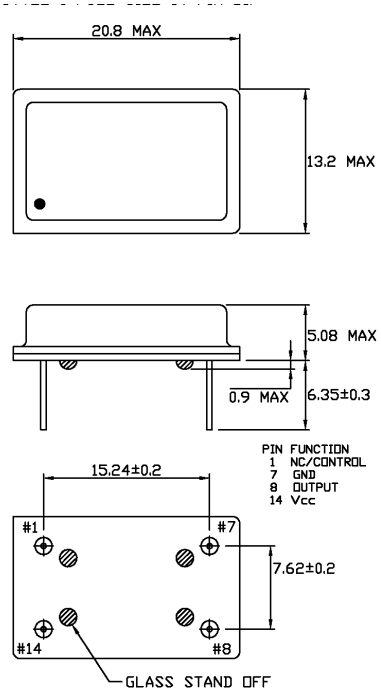

Style 3 Full Size 14 Pin Dip Gull Wing

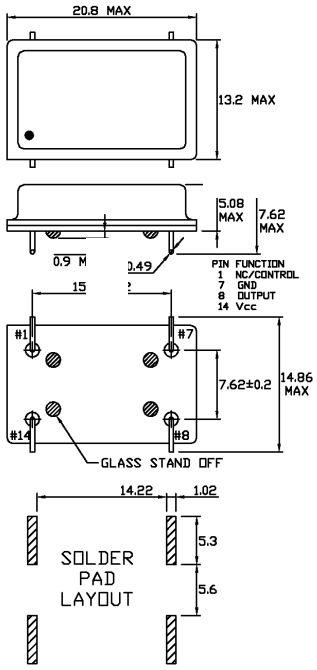

Style 4 Half Size 8 Pin Dip

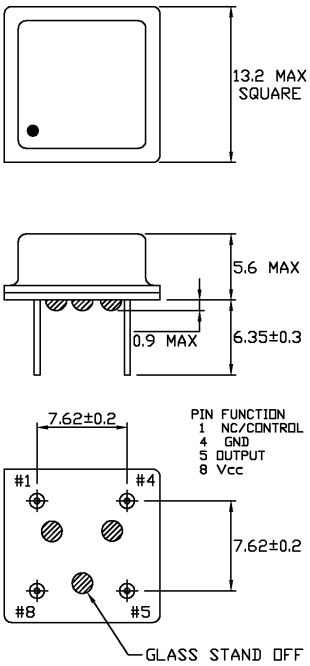

Style 6 Half Size 8 Pin Dip Gull Wing

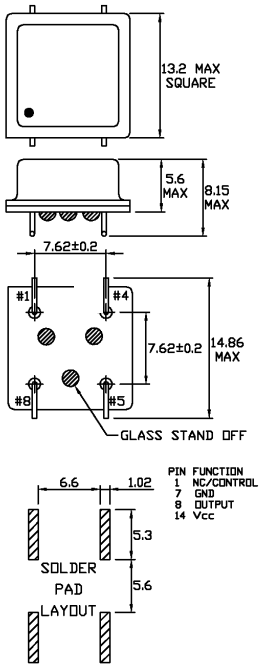

Cardinal Components, Inc.
155 Route 46 West
Wayne, NJ 07470
Rev: A-090414-1

TEL: (973)785-1333
E-MAIL: sales@cardinalxtal.com
WEB: http://www.cardinalxtal.com

CARDINAL COMPONENTS

Tape and Reel Specifications

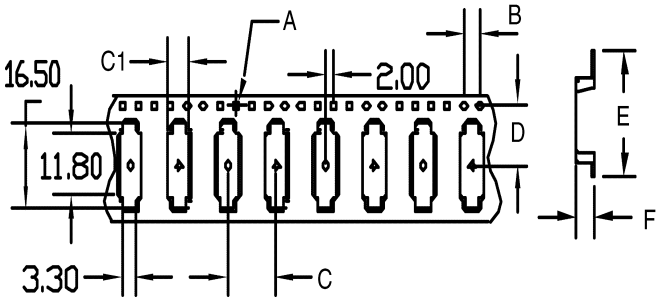

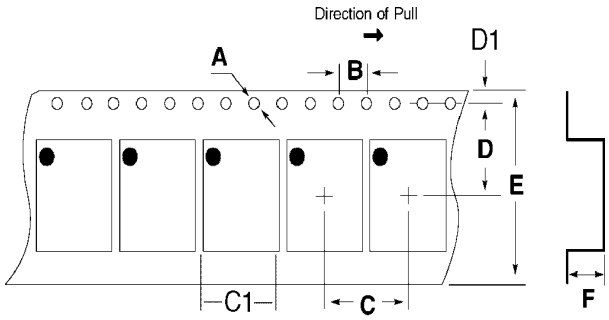

TA-TB

TC

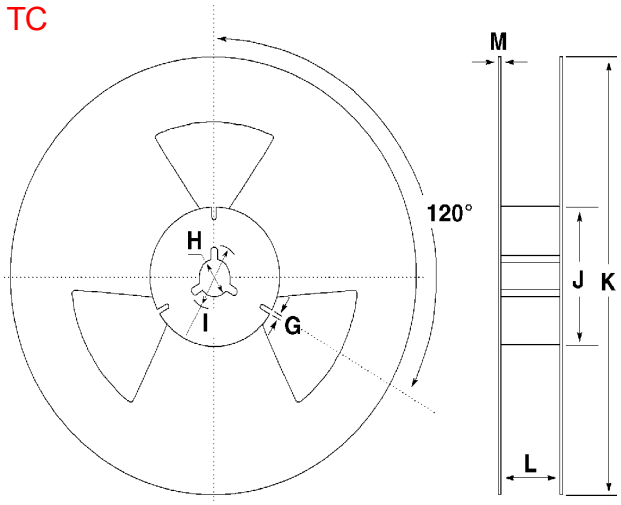

Tape Specifications (millimeters)

Code	A	B	C	C1	D	D1	E	F	Std Qty
TA	1.5	4.0	8.0	5.5	7.5	1.5	16.0	1.8	1,000
TB	1.5	4.0	12.07	10.2	10.5	1.5	21.5	5.0	1,000
TC	1.55	4.0	12.0	5.3	11.5	1.5	24.0	4.3	1,000

Reel Specifications (millimeters)

Code	G	H	I	J	K	L	M
R1	2.0	13.0	21.0	60.0	180.0	17.5	1.0
R2	2.0	13.0	21.0	100.0	330.0	26.0	2.0
R3	2.5	13.0	23.0	110.0	330.0	25.5	2.0

Cardinal Components, Inc.
155 Route 46 West
Wayne, NJ 07470
Rev: A-090414-1

TEL: (973)785-1333
E-MAIL: sales@cardinalxtal.com
WEB: http://www.cardinalxtal.com

Recommended Solder Profile

Infrared Reflow.
Do not use Ultrasonic-Wave Soldering
or Wave Solder with Package Immersed in Solder
Damage to Crystal will result

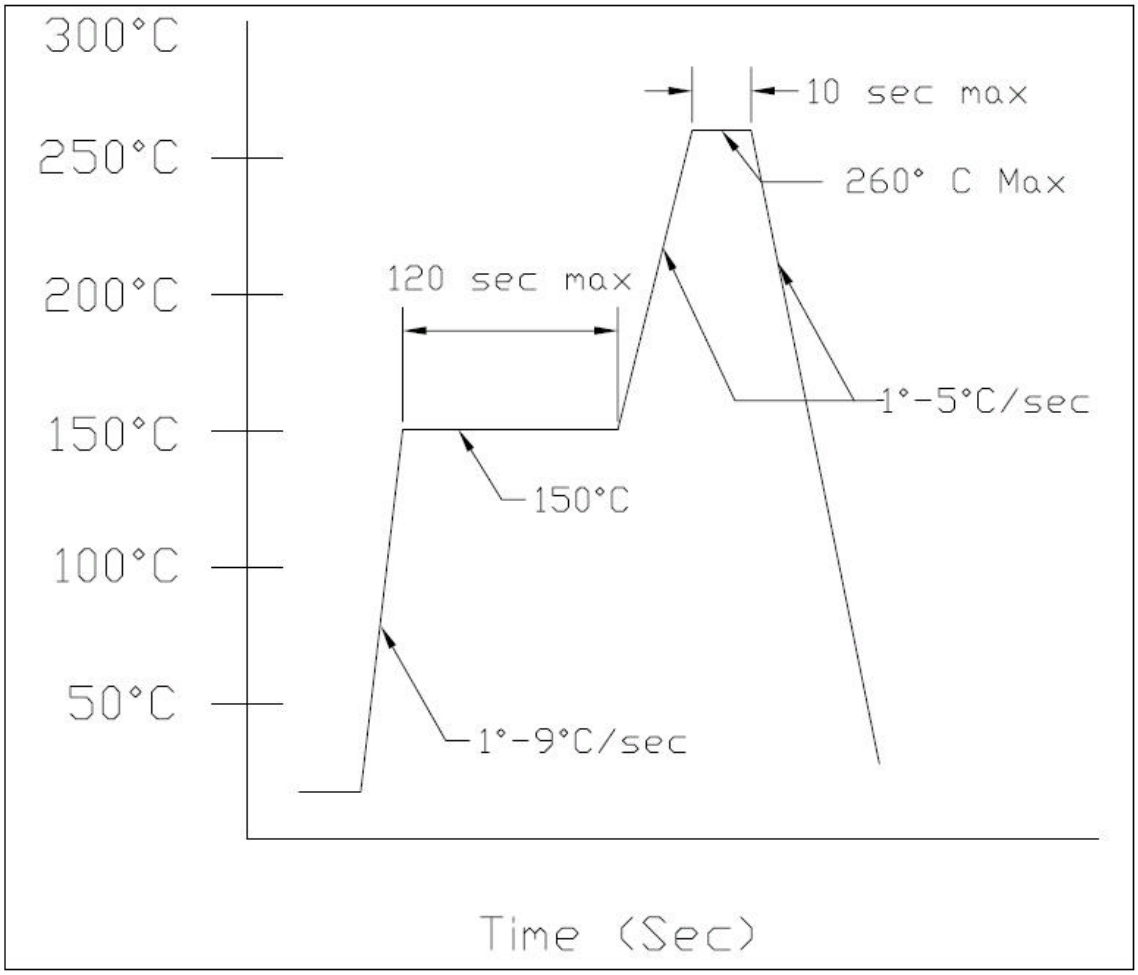

Cardinal Components, Inc.
155 Route 46 West
Wayne, NJ 07470
Rev: A-090414-1

TEL: (973)785-1333
E-MAIL: sales@cardinalxtal.com
WEB: http://www.cardinalxtal.com

Failure In Time & Mean Time To Failure

High temperature operating life testing of 100 units each of Cardinal's CPP, CAL, CHL and CCO65 series' were used for the measure of MTTF. The units were operated for 580 hours at 89 degrees Celsius with no failures.

$AE := 0.56$ **(eV)** $K := 8.617 \cdot 10^{-5}$ **(eV/K)** $T1 := 298$ **(Degree K)** $T2 := 387$ **(Degree K)**

Acceleration Factor $AF := e^{\left[\frac{AE}{K} \cdot \left[\left(\frac{1}{T1}\right) - \left(\frac{1}{T2}\right)\right]\right]}$

Where
AE= Activation Energy
K = Boltzman's constant 8.617E-5 eV/K
T1= Ambient temperature K
T2= Stress temperature K

Acceleration Factor $AF = 150.698$

Acceleration Factor $AF = 150.698$

$chi := 1.633$ $t := 58000$

Failure Rate $L := \frac{chi}{(2 \cdot AF \cdot t)}$

Where
L = Failure Rate (Lambda)
chi = chi square distribution (see chi-square distribution table)
t = total device hrs
AF= Acceleration Factor

Failure Rate $L = 9.342 \cdot 10^{-8}$

Failure In Time $FIT := L \cdot 10^{9}$

FIT= 93 failures per billion hours

Mean Time To Failure $MTTF := \frac{1}{FIT}$

$MTTF = 1.07 \cdot 10^{7}$ **MTTF= 10.7 million hours**

chi Square Distribution Function Table			
60% Confidence Level		90% Confidence Level	
Failure Qty	chi Factor	Failure Qty	chi Factor
0	1.633	0	4.605
1	4.045	1	7.779
2	6.211	2	10.645
3	8.351	3	13.362
4	10.473	4	15.987
5	12.584	5	18.549

Date: January 8, 2008
Document #: CarMTTF-08-2008
Author: YH Cardinal Components, Inc

Q E C

Certificate Of Registration

APPROVED QUALITY SCHEME
QEC
ISO 9001:2000
REGISTERED COMPANY

UKAS
QUALITY MANAGEMENT
077

This is to certify that

Cardinal Components Inc.

155 Route 46 West
Wayne
NJ 07470
USA

Has been assessed by Quality and Environmental Certification Ltd.
Their Quality Management System was confirmed to be in compliance with:

ISO 9001 : 2000

Registration is authorised on condition that the certification rules and regulations issued to them are adhered to:

Scope of Certification	Design and sale of programmable oscillators and the supply and sales of quartz crystals to OEMs, distributors and customer representatives of the world-wide electronics market.
Registration Number	6009
Date of Issue	20/12/2007
Valid To	19/12/2010

FAPyce

Signed on behalf of the Certification Manager QEC Ltd

Quality and Environmental Certification Limited, 10 Thyme Court, Farnborough, Hampshire GU14 9XT

CARDINAL COMPONENTS

5X7 SMD OSC MATERIAL TABLE

PART	MATERIAL	CAS #		PPM	WEIGHT (g)	(%) WEIGHT
CHIP IC						
(0.0008G)	SILICON	7440-21-3	997321 ppm	997321	0.00079786	0.445483
	ALUMINUM	7429-90-5	1919 ppm	1919	0.00000154	0.000860
	TITANIUM	7440-32-6	437 ppm	437	0.00000035	0.000195
	MOLYBDENOUM	7439-98-7	313 ppm	313	0.00000025	0.000140
	ARSENIC	7440-38-2	9 ppm	9	0.00000001	0.000006
	CHROMIUM	7440-47-3	1 ppm	1	0.00000000	0.000000
				SUBTOTAL	0.00080001	0.446684
PKG						
(0.14g)	ALUMINUM OXIDE (A1203)	1344-28-1	627654 ppm	627654	0.08787156	49.062845
	CHROMIUM (III) OXIDE	1308-38-9	26784 ppm	26784	0.00374976	2.093668
	COBALT	7440-48-4	34489 ppm	34489	0.00482846	2.695957
	IRON	7439-89-6	101044 ppm	101044	0.01414616	7.898470
	NICKEL	7440-02-0	64981 ppm	64981	0.00909734	5.079475
	SILVER	7440-22-4	16918 ppm	16918	0.00236852	1.322457
	TUNGSTEN	7440-33-7	83205 ppm	83205	0.01164870	6.504020
	SILVER-OXIDE	44459-55-0	24915 ppm	24915	0.00348810	1.947571
	GOLD	7440-57-5	7301 ppm	7301	0.00102214	0.570709
	MISC	SYSTEM	12709 ppm	12709	0.00177926	0.993445
				SUBTOTAL	0.14000000	78.168617
LID						
(0.02g)	IRON	7439-89-6	51.50%	515000	0.01030000	5.750977
	NICKEL	7440-02-0	30.00%	300000	0.00600000	3.350084
	COBALT	7440-48-4	18.00%	180000	0.00360000	2.010050
	Mn	7439-96-5	0.50%	5000	0.00010000	0.055835
				SUBTOTAL	0.02000000	11.166946
CRYSTAL						
(0.008g)	QUARTZ (SiO2)	14808-60-7	100%	SUBTOTAL	0.00800000	4.466778
EVAPORATION						
(0.001g)	SILVER	7440-22-4	100%	SUBTOTAL	0.00010000	0.055835
CONDUCTIVE ADHESIVE						
XA-819A	SILVER	7440-22-4	80%	800000	0.00320000	1.786711
(0.004g)	n-DODECANE	112-40-3	10%	1000000	0.00040000	0.223339
	SOLVENT NAPHTHA	64742-94-5	10%	1000000	0.00040000	0.223339
	(petroleum) heavy arom			SUBTOTAL	0.00400000	2.233389
CONDUCTIVE ADHESIVE						
C929	SILVER	7440-22-4	80%	800000	0.00480000	2.680067
(0.006g)	MISC	SYSTEM	20%	200000	0.00120000	0.670017
				SUBTOTAL	0.00600000	3.350084
WIRE BONDING						
(0.0002g)	GOLD	7440-57-5	100%	SUBTOTAL	0.00020000	0.111669
				TOTAL	**0.179100**	**100.0**

CARDINAL COMPONENTS, INC.

CERTIFICATE OF COMPLIANCE- RoHS Declaration

Cardinal Components, Inc.
155 Route 46 West
Wayne, NJ 07470
Tel. 973-785-1333

Refer to Cardinal part numbers and component descriptions:
All components are RoHS compliant and meet the requirements of the current RoHS Directive 2002/95/EC.

CC154 series	CPP series	CTF series
CCO65 series	CAM series	CPF series
CX406 series	CAV series	CX325 series
CTH11 series	CAE series	CX635 series
CLP series	CHE series	CX5 series
C49 series	CHL series	CMS series
CSM1 series	CPO series	CC131 series
CV01 series	CX532 series	CC137 series
CC128 series	CAMs series	CC129 series

NOTE* ALL CARDINAL DEVICES ARE RoHS COMPLIANT. PART NUMBERS WILL REMAIN THE SAME.

List Exemptions per Annex of 2002/95/EC.

The signature below verifies that the statements above, including but not limited to any material composition data, are valid and accurate.

Signature: Carl Fabend Date: 9/12 /2007
(Authorized representative of Cardinal Components, Inc.)

Name: Carl E. Fabend Phone: (973)-785-1333

Title: President e-mail: sales@cardinalxtal.com

Distributors

Domestic

ALABAMA

Digi-Key
www.digikey.com

Dove Electronics
www.doveonline.com

New Advantage Corporation
www.nacsemi.com

WPG Americas
www.wpgamericas.com

ALASKA

Digi-Key
www.digikey.com

Dove Electronics
www.doveonline.com

ARIZONA

Carlton-Bates a Wesco Subsid
www.carlton-bates.com

Digi-Key
www.digikey.com

Dove Electronics
www.doveonline.com

WPG Americas
www.wpgamericas.com

ARKANSAS

Carlton-Bates a Wesco Subsid
www.carlton-bates.com

Digi-Key
www.digikey.com

Dove Electronics
www.doveonline.com

WPG Americas
www.wpgamericas.com

CALIFORNIA

Digi-Key
www.digikey.com

Dove Electronics
www.doveonline.com

Edge Electronics
www.edgeelectronics.com

New Advantage Corporation
www.nacsemi.com

SMD, Inc.
www.smdinc.com

Target Electronics, Inc.
www.targetelectronics.com

WPG Americas
www.wpgamericas.com

Domestic

COLORADO

Digi-Key
www.digikey.com

Dove Electronics
www.doveonline.com

WPG Americas
www.wpgamericas.com

CONNECTICUT

Digi-Key
www.digikey.com

Dove Electronics
www.doveonline.com

Simcona Electronics Corp.
www.simcona.com

SMD, Inc.
www.smdinc.com

WPG Americas
www.wpgamericas.com

DELAWARE

Digi-Key
www.digikey.com

Dove Electronics
www.doveonline.com

Electronic Connections, Inc.
www.ecinj.com

WPG Americas
www.wpgamericas.com

FLORIDA

Digi-Key
www.digikey.com

Dove Electronics
www.doveonline.com

Edge Electronics
www.edgeelectronics.com

New Advantage Corporation
www.nacsemi.com

Simcona Electronics Corp.
www.simcona.com

SMD, Inc.
www.smdinc.com

WPG Americas
www.wpgamericas.com

Domestic

GEORGIA

Carlton-Bates a Wesco Subsid
www.carlton-bates.com

Digi-Key
www.digikey.com

Dove Electronics
www.doveonline.com

New Advantage Corporation
www.nacsemi.com

WPG Americas
www.wpgamericas.com

HAWAII

Digi-Key
www.digikey.com

Dove Electronics
www.doveonline.com

IDAHO

Digi-Key
www.digikey.com

Dove Electronics
www.doveonline.com

WPG Americas
www.wpgamericas.com

ILLINOIS

Carlton-Bates a Wesco Subsid
www.carlton-bates.com

Digi-Key
www.digikey.com

Dove Electronics
www.doveonline.com

WPG Americas
www.wpgamericas.com

INDIANA

Digi-Key
www.digikey.com

Dove Electronics
www.doveonline.com

WPG Americas
www.wpgamericas.com

IOWA

Digi-Key
www.digikey.com

Dove Electronics
www.doveonline.com

Domestic

KANSAS

Carlton-Bates a Wesco Subsid
www.carlton-bates.com

Digi-Key
www.digikey.com

Dove Electronics
www.doveonline.com

WPG Americas
www.wpgamericas.com

KENTUCKY

Digi-Key
www.digikey.com

Dove Electronics
www.doveonline.com

WPG Americas
www.wpgamericas.com

Louisiana

Carlton-Bates a Wesco Subsid
www.carlton-bates.com

Digi-Key
www.digikey.com

Dove Electronics
www.doveonline.com

WPG Americas
www.wpgamericas.com

MAINE

Digi-Key
www.digikey.com

Dove Electronics
www.doveonline.com

SMD, Inc.
www.smdinc.com

WPG Americas
www.wpgamericas.com

MARYLAND

Digi-Key
www.digikey.com

Dove Electronics
www.doveonline.com

Electronic Connections, Inc.
www.ecinj.com

Domestic

MASSACHUSETTS

Carlton-Bates a Wesco Subsid
www.carlton-bates.com

Digi-Key
www.digikey.com

Dove Electronics
www.doveonline.com

Edge Electronics
www.edgeelectronics.com

New Advantage Corporation
www.nacsemi.com

Simcona Electronics Corp.
www.simcona.com

SMD, Inc.
www.smdinc.com

WPG Americas
www.wpgamericas.com

MICHIGAN

Digi-Key
www.digikey.com

Dove Electronics
www.doveonline.com

WPG Americas
www.wpgamericas.com

MINNESOTA

Digi-Key
www.digikey.com

Dove Electronics
www.doveonline.com

New Advantage Corporation
www.nacsemi.com

WPG Americas
www.wpgamericas.com

MISSISSIPPI

Digi-Key
www.digikey.com

Dove Electronics
www.doveonline.com

WPG Americas
www.wpgamericas.com

MISSOURI

Carlton-Bates a Wesco Subsid
www.carlton-bates.com

Digi-Key
www.digikey.com

Dove Electronics
www.doveonline.com

Domestic

MONTANA

Digi-Key
www.digikey.com

Dove Electronics
www.doveonline.com

WPG Americas
www.wpgamericas.com

NEBRASKA

Digi-Key
www.digikey.com

Dove Electronics
www.doveonline.com

WPG Americas
www.wpgamericas.com

NEVADA

Digi-Key
www.digikey.com

Dove Electronics
www.doveonline.com

NEW HAMPSHIRE

Digi-Key
www.digikey.com

Dove Electronics
www.doveonline.com

Simcona Electronics Corp.
www.simcona.com

SMD, Inc.
www.smdinc.com

NEW JERSEY

Digi-Key
www.digikey.com

Dove Electronics
www.doveonline.com

Edge Electronics
www.edgeelectronics.com

Electronic Connections, Inc.
www.ecinj.com

Mast Distributors, Inc.
www.mastd.com

WPG Americas
www.wpgamericas.com

NEW MEXICO

Digi-Key
www.digikey.com

Dove Electronics
www.doveonline.com

WPG Americas
www.wpgamericas.com

Domestic

NEW YORK

Digi-Key
www.digikey.com

Dove Electronics
www.doveonline.com

Edge Electronics
www.edgeelectronics.com

Mast Distributors, Inc.
www.mastd.com

Simcona Electronics Corp.
www.simcona.com

WPG Americas
www.wpgamericas.com

NORTH CAROLINA

Carlton-Bates a Wesco Subsid
www.carlton-bates.com

Digi-Key
www.digikey.com

Dove Electronics
www.doveonline.com

WPG Americas
www.wpgamericas.com

NORTH DAKOTA

Digi-Key
www.digikey.com

Dove Electronics
www.doveonline.com

WPG Americas
www.wpgamericas.com

OHIO

Carlton-Bates a Wesco Subsid
www.carlton-bates.com

Digi-Key
www.digikey.com

Dove Electronics
www.doveonline.com

Simcona Electronics Corp.
www.simcona.com

WPG Americas
www.wpgamericas.com

OKLAHOMA

Carlton-Bates a Wesco Subsid
www.carlton-bates.com

Digi-Key
www.digikey.com

Dove Electronics
www.doveonline.com

WPG Americas
www.wpgamericas.com

Domestic

OREGON

Digi-Key
www.digikey.com

Dove Electronics
www.doveonline.com

New Advantage Corporation
www.nacsemi.com

WPG Americas
www.wpgamericas.com

Pennsylvania

Carlton-Bates a Wesco Subsid
www.carlton-bates.com

Digi-Key
www.digikey.com

Dove Electronics
www.doveonline.com

Edge Electronics
www.edgeelectronics.com

Electronic Connections, Inc.
www.ecinj.com

Simcona Electronics Corp.
www.simcona.com

WPG Americas
www.wpgamericas.com

RHODE ISLAND

Digi-Key
www.digikey.com

Dove Electronics
www.doveonline.com

Simcona Electronics Corp.
www.simcona.com

SMD, Inc.
www.smdinc.com

WPG Americas
www.wpgamericas.com

South Carolina

Carlton-Bates a Wesco Subsid
www.carlton-bates.com

Digi-Key
www.digikey.com

Dove Electronics
www.doveonline.com

WPG Americas
www.wpgamericas.com

SOUTH DAKOTA

Digi-Key
www.digikey.com

Dove Electronics
www.doveonline.com

WPG Americas
www.wpgamericas.com

Domestic

TENNESSEE

Carlton-Bates a Wesco Subsid
www.carlton-bates.com

Digi-Key
www.digikey.com

Dove Electronics
www.doveonline.com

WPG Americas
www.wpgamericas.com

TEXAS

Carlton-Bates a Wesco Subsid
www.carlton-bates.com

Digi-Key
www.digikey.com

Dove Electronics
www.doveonline.com

Edge Electronics
www.edgeelectronics.com

M3 Distribution

New Advantage Corporation
www.nacsemi.com

WPG Americas
www.wpgamericas.com

UTAH

Digi-Key
www.digikey.com

Dove Electronics
www.doveonline.com

WPG Americas
www.wpgamericas.com

VERMONT

Digi-Key
www.digikey.com

Dove Electronics
www.doveonline.com

SMD, Inc.
www.smdinc.com

WPG Americas
www.wpgamericas.com

VIRGINIA

Digi-Key
www.digikey.com

Dove Electronics
www.doveonline.com

WPG Americas
www.wpgamericas.com

Domestic

WASHINGTON

Digi-Key
www.digikey.com

Dove Electronics
www.doveonline.com

WPG Americas
www.wpgamericas.com

WEST VIRGINIA

Digi-Key
www.digikey.com

Dove Electronics
www.doveonline.com

WPG Americas
www.wpgamericas.com

WISCONSIN

Digi-Key
www.digikey.com

Dove Electronics
www.doveonline.com

WPG Americas
www.wpgamericas.com

WYOMING

Digi-Key
www.digikey.com

Dove Electronics
www.doveonline.com

WPG Americas
www.wpgamericas.com

International

AUSTRALIA

Clarke & Severn Electronics
www.clarke.com.au

AUSTRIA

WDI GmbH
www.wdi-online.com

BELGIUM

Adelco Electronics Belgium

BRAZIL

Digi-Key
www.digikey.com

New Advantage Corporation
www.nacsemi.com

RLC Components
www.rlccomponents.com.br

CANADA

Crystal Components

Simcona Electronics Corp. Ca
www.simcona.ca

WPG Americas
www.wpgamericas.com

International

China

Addcom Solution Ltd.

Digi-Key
www.digikey.com

New Advantage Corp China

FRANCE

Adelco Electronics SARL

GERMANY

WDI AG
www.wdi.ag

Hong Kong

Addcom Solution Ltd.

INDIA

Digi-Key
www.digikey.com

New Advantage Corp Chennai

IRELAND

Digi-Key
www.digikey.com

ISRAEL

Omarim Technologies

ITALY

Dimac Red SRL

Japan

Digi-Key
www.digikey.com

MALAYSIA

ADDCOM Solution

New Advantage Corp Malaysi
www.newadvg.com

MEXICO

New Advantage
www.newadvg.com

PHILIPPINES

ADDCOM Solution

SINGAPORE

ADDCOM Solution

SOUTH AFRICA

Digi-Key
www.digikey.com

SPAIN

CEMESA

SWITZERLAND

WDI GmbH
www.wdi-online.com

THAILAND

ADDCOM Solution

International

THE NETHERLANDS

Adelco Electronics BV
www.adelco.be

TURKEY

Digi-Key
www.digikey.com

UKRAINE

Khalus Electronics
www.khalus.com.ua

UNITED KINGDOM

Digi-Key
www.digikey.com

VIETNAM

ADDCOM Solution

Principles of Quartz Crystal Operation

QUARTZ PRINCIPLES OF OPERATION

Quartz crystal units serve as the controlling element of oscillator circuits by converting mechanical vibrations to electrical current at a specific frequency. This is accomplished by means of the "Piezoelectric" effect. Piezoelectricity is electricity created by pressure. In a piezoelectric material, the application of mechanical pressure along one axis will result in the creation of an electrical charge along an axis at right angles to the first. In some materials, the obverse piezoelectric effect is found, which means that the imposition of an electric field on the ends of an axis will result in a mechanical deflection along an axis at right angles to the first. Quartz is uniquely suited, in terms of mechanical, electrical, and chemical properties, for the manufacture of frequency control devices. Quartz crystal units that oscillate within certain frequency and temperature ranges have been developed over the years.

The most practical raw material for quartz crystals is crystalline silicondioxide, SiO_2. This results from its mechanical and chemical stability, together with a favorable piezoelectric constant. The small frictional losses in the material guarantee the manufacture of electromechanical oscillators of very high quality factors.

In nature, silicondioxide is found in different forms, one of which is quartz. Even though 14% of the earth's surface consists of silicondioxide, quartz of suitable size and necessary purity is seldom found. As a result, cultured quartz has been developed. Cultured quartz is achieved from hot saturated solutions of silicondioxide, in large steel autoclaves at a temperature of some 400°C and a pressure of 1,000 Kgs/cm^2. The axial growth of the crystal is controlled by previously cut seeds planted in the autoclaves. The growth rate can be as much as 2.5 mm per day. In order to achieve a pure crystal, a controlled slow rate of growth is preferred. The yield of quartz crystals from cultured quartz is higher than when grown quartz is used.

Temperature coefficient has to do with the frequency stability of a quartz blank with respect to changes in temperature, which is a function of quartz, the mode of vibration, and the type of cut. The frequency- temperature curve generalized for high frequency AT crystals, known as the frequency deviation (in PPM) at a specified temperature range (in °C), the family of curves can be used to define maximum allowable deviation (in minutes) around the center for cutting the blank.

Of the various elements, the "AT" cut has become the most popular, because it is available at relatively high frequencies, exhibits excellent frequency vs temperature stability, and is widely available at reasonable cost.

Fundamental vs. Overtone is of concern primarily when specifying the "AT" cut crystal unit. These units increase in frequency as the thickness of the resonator plate is diminished. At some point, typically around 30 MHz, the plate becomes too thin for efficient processing. As the "AT" will resonate at odd integer multiples of the fundamental frequency, it is necessary to specify the desired order of overtone when ordering higher frequency crystals.

Drive level is the amount of power dissipated by the crystal. Drive level is usually specified in terms of micro or milliwatts, with a typical value being 100 microwatts.

"Series" resonant crystals are intended for use in circuits containing no reactive components in the oscillator feedback loop. ***"Parallel" resonant crystals*** are intended for use in circuits containing reactive components (usually capacitors) in the oscillator feedback loop. Such circuits depend on the combination of the reactive components and the crystal to accomplish the phase shift necessary to start and maintain oscillation at the specified frequency.

Pullability refers to the change in frequency of a crystal unit, either from the natural resonant frequency (F_R) to a load resonant frequency (F_L), or from one load resonant frequency to another. The amount of pullability exhibited by a given crystal unit at a given value of load capacitance is a function of the shunt capacitance (C_0) and the motional capacitance (C_1) of the crystal unit.

The ***equivalent circuit*** of a quartz crystal is useful in explaining how a crystal will perform.

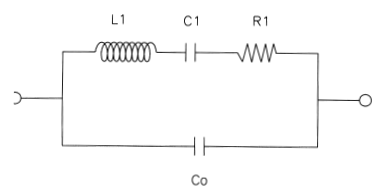

C_0 is the shunt or static capacitance of a crystal. This parameter equals the sum of the capacitance measured from pin to pin including the electrode and mounting structure.

L_1, C_1, and R_1 are the motional arm of the crystal.

L_1, motional inductance, is determined by the mechanical mass of quartz in motion. Thompson's formula relates the L_1 and the C_1 specifications.

$$L_1 = \frac{1}{4\pi^2 f^2 C_1}$$

C_1 is the motional capacitance of the crystal. This parameter is determined by the stiffness of the quartz (constant), the area of the electrode, and the thickness and shape of the quartz wafer.

R_1 stands for the equivalent series resistance (ESR) of a crystal. It is a function of the mechanical losses during vibration. Low resistance is a sign that little mechanical loss is occurring. The lower the resistance, the more easily the crystal will oscillate.

Principles of Quartz Crystal Operation

Three main components of crystal specifications are:

Calibration at room temperature
Stability over the temperature range
Aging

Calibration at room temperature is a measurement of the accuracy of the frequency at +25°C. Crystal frequencies are adjusted within the stated tolerance by changing the mass of the electrode. Lower frequencies are less sensitive to mass change and are therefore easier to hold tighter tolerances. Tolerance and stability are measured in parts per million (ppm).

The angle at which the quartz bar is cut determines the ***stability*** over the temperature range. A very popular cut is the "AT" cut. The accuracy of the cut determines how tight the shifts in ppm will be over a temperature range.

Aging is defined as the change in frequency over time. Two factors affect this specification: contamination and stress. See the section on aging.

Load capacity is the dynamic capacity of the total circuit measured or computed across the crystal terminals. In a parallel circuit the load capacity should be selected to operate the crystal at a stable point on the fr-fa reactance curve (as close to fr as possible).

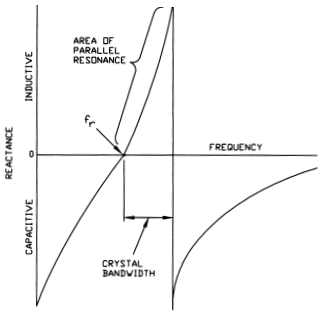

Below is an example of an oscillator circuit in which the crystal is expected to run in its parallel mode. If a series crystal is put into this circuit, the frequency would be high by approximately 0.02%.

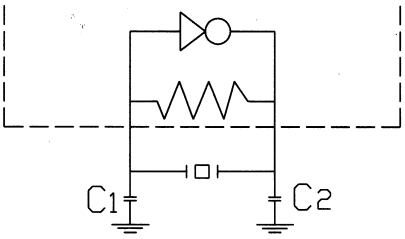

Load capacitance (C_L), which is specified in picofarads (pF), can be calculated by the following formula:

$$C_L = \frac{C_1 * C_2}{C_1 + C_2} + \text{Cstray}$$

Cstray includes pin to pin, input and output capacitance of the oscillator stage at the C_1 and C_2 pins plus any additional parasitics. It is usually assumed Cstray equals 5 pF.
If C_1 and C_2 each equal 22 pF, then C_L = 16 pF.

If the oscillator stage is configured with a phase shift presented to the crystal exactly equal to 0° or multiples of 360°, then the crystal will operate at series resonance (fr). The crystal's load capacity must be specified "Series Resonance."

The Quality Factor (Q) Value of a crystal unit is a measure of the units relative quality, or efficiency of oscillation. The maximum attainable stability of a crystal unit is dependent on the "Q" value. The separation between the series and parallel frequencies is called bandwidth. The smaller the bandwidth, the higher the "Q" value, and the steeper the slope of the reactance. Changes in the reactance of external circuit components have less effect (less "pullability") on a high "Q" crystal; therefore such a part is more stable.

The U.S. military specifications (MIL-C-3098) for crystals define the ***equivalent resistance*** as follows:

For crystal units designed to operate at series resonance, equivalent resistance is the equivalent ohmic resistance of the unit when operating in the specified crystal impedance meter adjusted for the rated drive level and tuned to the specified crystal unit frequency.

For crystal units designed to operate at parallel or antiresonance, equivalent resistance is the equivalent ohmic resistance of the unit and a series load capacitor of the specified load value, when operating in the specified crystal impedance meter adjusted for rated drive level and tuned to the specified crystal unit frequency.

Operating ***drive level*** is the power dissipated internally in the crystal blank. It is very important to carefully determine and select a drive level that is consistent with reliable start up and the desired performance of the crystal once oscillating. If the drive level is too low (generally less than 100 microwatts), starting of oscillation may not occur. However, drive level that is too high (generally greater than 1 milliwatt) will cause frequency shifts, poor long–term frequency aging, and frequency perturbations over the operating temperature.

Aging is a general term used to describe the gradual

Principles of Quartz Crystal Operation

- f_s = Series Resonant Frequency = $\frac{1}{2\pi\sqrt{L_1C_1}}$
- f_a = Antiresonant Frequency = $\frac{1}{2\pi}\sqrt{\frac{1}{L_1C_1}+\frac{1}{L_1C_0}}$
- ΔF = Change in Frequency = $\frac{f_sC_1}{2(C_0+C_L)}$
- C_1 = Motional capacitance = $\frac{2(C_0+C_L)\,\Delta F}{f_s}$
- L_1 = Motional Inductance = $\frac{1}{4\pi^2f_s^2C_1}$
- R_1 = Series Resonant Resistance
- r = Capacitance Ratio = $\frac{C_0}{C_1}$
- Q = Quality Factor = $\frac{1}{2\pi f_sR_1C_1}$
- R_a = Antiresonant Resistance
- C_0 = Crystal Shunt Capacitance
- C_L = Load Capacitance

deterioration of the operating characteristics of a crystal unit over time. Many factors contribute to this deterioration, such as internal contamination, excessive drive level, wire fatigue, frictional wear, and surface erosion of the crystal blank. Cleanliness of the manufacturing process and of the quartz blank can greatly reduce aging by contamination. The most rapid aging occurs within the first year. If aging rates of a crystal must be low, the crystal can be pre-aged by temperature-cycling or by high-temperature burn-in for an extended period of time.

All quartz crystals have multiple vibrational modes. ***Spurious modes*** refer to those that are unwanted and can be a problem if the response is as strong as the main mode. When the oscillator runs on the spur instead of the main mode, the frequency output is changed. Spurious modes should be specified as either a resistance ratio to the main mode or dB suppression. A resistance ratio of 1.5 or 2.0 to 1 is sufficient to avoid mode hopping. A -3dB to -6dB is an approximate equivalent for a specification in terms of dB.

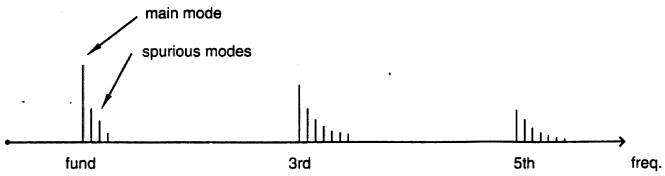

Frequency Spectrum

Glossary

ABSOLUTE MAXIMUM RATING

Maximum rated voltage value assuring the normal operation of a crystal oscillator. Exceeding this value may result in a decrease in the reliability of a crystal oscillator.

AGING

The systematic change in frequency with time due to internal changes in the crystal and/or oscillator. Aging is often expressed as a maximum value in parts per million per year (ppm/yr). The rate of aging is typically greatest during the first 30 to 60 days, after which time the aging rate decreases. The following factors affect crystal aging: adsorption and desorption of contamination on the surfaces of the quartz, stress relief of the mounting and bonding structures, material outgassing, and seal integrity.

CALIBRATION ACCURACY (SEE FREQUENCY TOLERANCE)

CAPACITIVE RATIO

In applications (i.e. VCXO) where variations in the crystal parallel resonant frequency are desired, the capacitive ratio (r) may be specified. The capacitive ratio equation is shown below. This ratio is an indicator of the change in a parallel load resonant frequency as a direct result of a given change in crystal load capacitance. Because the value of this ratio has physical limitations when it is realized in a quartz crystal design, please consult Cardinal Components engineering department for product specifications.

$$r = \frac{C_0}{C_1}$$

CENTER FREQUENCY

The specified reference frequency of the crystal, typically specified in megahertz (MHz) or kilohertz (kHz).

CRYSTAL EQUIVALENT CIRCUIT

A crystal device consists of a quartz resonator with metal plating. This plating, located on both sides of the crystal and is connected to insulated leads on the crystal package. The device exhibits a piezoelectric response between the two crystal electrodes.

DRIVE LEVEL

A function of the driving or excitation current flowing through the crystal. The Drive Level is the amount of power dissipation in the crystal, expressed in microwatts or milliwatts. Maximum power is the most power the device can dissipate while still maintaining operation with all electrical parameters guaranteed. Drive level should be maintained at the minimum levels necessary to initiate proper start-up and assure steady oscillation. Excessive drive level can cause poor aging characteristics and crystal damage.

DUTY CYCLE

The measure of output waveform uniformity. This term, also referred to as symmetry, is a measurement of the time that the output waveform is in a logic high state, compared to the logic low state, expressed as a percentage (%). This parameter is measured at a specific voltage threshold or at a percentage of the output waveform amplitude.

EQUIVALENT SERIES RESISTANCE (ESR)

The resistive element, measured in ohms, of a crystal device. The motional inductance (L_1) and motional capacitance (C_1) are of equal ohmic value but are exactly opposite in phase. The net result is that they cancel one another and only a resistance remains in the series leg of the above equivalent circuit. The ESR measurement is made only at the series resonant frequency (F_S), not at some predetermined parallel resonant frequency (F_L). Crystal resistance measured at some parallel load resonant frequency is often called the “effective” resistance.

FANOUT

Number of IC gates which can be connected to the output of a crystal oscillator.

Glossary

FREQUENCY STABILITY

The amount of frequency deviation from the ambient temperature frequency over the operating temperature range. This deviation is associated with a set of operating conditions, including operating temperature range, load capacitance, and drive level. This parameter is specified with a maximum and minimum frequency deviation, expressed in percent (%) or parts per million (ppm). The frequency stability is determined by the type of quartz cut and the angle of the quartz cut. Some of the secondary factors include mode of operation, drive level, load capacitance, and mechanical design.

Frequency stability includes frequency drifts over the operating temperature, input voltage changes, output load variations and the effects of long-term aging. The most standard stabilities are specified as ± 100 ppm, and ± 50 ppm. Cardinal Components oscillators can also be specified with ± 25 ppm and ± 10 ppm stabilities.

FREQUENCY TOLERANCE

The amount of frequency deviation from a specified center frequency at ambient temperature of 25°C. This parameter is specified with a maximum and minimum frequency deviation, expressed in percent (%) or parts per million (ppm). This deviation is associated with a set of operating conditions including load capacitance and drive level.

INPUT CURRENT

The amount of current consumption by an oscillator from the power supply, typically specified in milliamps (mA).

LOGIC COMPATIBILITY

In the past, CMOS, TTL, and ECL oscillators were only capable of driving output loads of the same logic family. With the introduction of HCMOS logic, dual compatible oscillators are manufactured that can drive two logic families. Most Cardinal Components oscillators are capable of driving both HCMOS and TTL loads. The dual compatible oscillator's output waveform voltages are derived from HCMOS logic. The logic output exceeds the minimum voltage level requirements of TTL, and with the higher output current capability of HCMOS, these dual compatible oscillators can drive both logic families. Be aware that oscillators not specifically designed for both families cannot be used to drive other logic families, i.e., TTL cannot drive HCMOS or ECL logic. Cardinal Components also offers oscillators that drive TTL and ECL logic exclusively.

NOMINAL FREQUENCY

The specified "name plate frequency" of a crystal or oscillator.

MODE OF OPERATION

The Mode of Operation of a quartz device is one of the factors that will determine the frequency of oscillation. For "AT" cut quartz crystals, overtone modes are at odd frequency harmonics. For example, a crystal may operate at its fundamental frequency of 10 MHz, or at odd harmonics of approximately 30 MHz (Third Overtone), 50 MHz (Fifth Overtone) and 70 MHz (Seventh Overtone).

MOTIONAL CAPACITANCE (C1) AND MOTIONAL INDUCTANCE (L1)

The motional capacitance and inductance are designated by C_1 and L_1. For a "Series" resonant crystal, the value of C_1 resonates with the value of L_1 at a frequency (F_S).

$$F_S = \frac{1}{2\pi\sqrt{L_1 C_1}}$$

Typically, L_1 is not mentioned when working with most crystals. Due to this absolute equation, it is only necessary to specify one motional component or the other. The industry standard is to specify a proper value of C_1 only. The actual value of C_1 has physical limitations when it is realized in a quartz crystal design. These constraints include the mode of operation, the quartz cut, the mechanical design, and the nominal frequency of the crystal.

OPERATING TEMPERATURE RANGE

The maximum and minimum temperatures that the crystal device can be exposed to during oscillation. Over this temperature range, all of the specified device operating parameters are guaranteed.

Glossary

OUTPUT VOLTAGE LEVELS

In digital logic, voltage levels are referred to in terms of logic “0” and logic “1”. These levels vary depending on the type of output logic required for the application.

TTL	V_{OL} = Logic “0” = 0.4V Max
	V_{OH} = Logic “1” = 2.4V Max
HCMOS	V_{OL} = Logic “0” = 0.5V Max
	V_{OH} = Logic “1” = 4.5V Max
ECL	V_{OL} = Logic “0” = -1.95V Min / -1.60V Max
	V_{OH} = Logic “1” = -1.00V Min / -0.75V Max

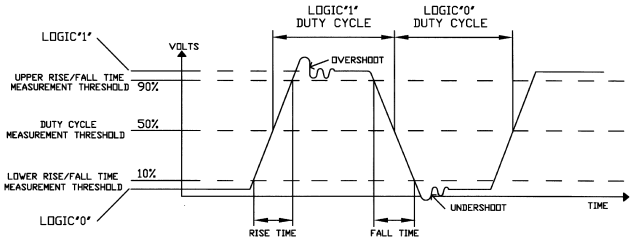

OVERSHOOT/UNDERSHOOT

This effect is commonly called ringing. The output voltage can exceed the steady state plateau of either the logic “0” state or the logic “1” state for a period of time. This ringing will decrease in amplitude until the steady state plateau is reached. The ringing is caused by an unmatched impedance load presented to the oscillator output. It becomes more pronounced as the rise/fall times decrease and the output frequency increases. Proper output loading and good R.F./Microwave transmission line techniques must be used to prevent ringing on the waveform.

PULLABILITY

Pullability refers to the change in the parallel load resonant frequency as a function of change in crystal load capacitance. The equation below is used to calculate the frequency difference, expressed in ppm, between two parallel load resonant frequencies [F_{CL1} and F_{CL2}] as a direct result of a given change in crystal load capacitance [C_{L1} and C_{L2}]. Because there are several methods to express crystal pullability, please consult Cardinal Components engineering department for product specifications.

$$\frac{\Delta F}{F} = \frac{F_{CL1} - F_{CL2}}{F_{CL1}}$$

QUARTZ CRYSTAL

Synthetic quartz is composed of silicon and oxygen (silicondioxide) and is cultured in autoclaves under high pressure and temperature. Quartz exhibits piezoelectric properties that generate an electrical potential when pressure is applied on the surfaces of the crystal. Conversely, when an electrical potential is applied to the surfaces of a crystal, mechanical deformation of vibration is generated. These vibrations occur at a frequency determined by the crystal design and oscillator circuit. Under proper conditions, quartz is used to stabilize the frequency of an oscillator circuit.

QUARTZ CRYSTAL OSCILLATOR

A timing device that consists of a crystal and an oscillator circuit, providing an output waveform at a specified reference frequency.

RISE AND FALL TIMES

Rise time is the amount of time, measured in nanoseconds that it takes to go from the logic “0” state to the logic “1” state. The fall time is the transition time from logic “1” state to logic “0” state. The time is measured at the 10% and the 90% points of the voltage transition.

SERIES VS. PARALLEL LOAD RESONANCE

A crystal can be used in an oscillator circuit to operate in either of two resonant modes: Series Resonance or Parallel Load Resonance (also known as antiresonance). The crystals used in these two types of modes are physically the same crystal, but calibrated to slightly different frequencies.

When a crystal is placed into an oscillator circuit, they oscillate together at a tuned frequency. This frequency is dependent upon the crystal design and the amount of Load Capacitance, if any, the oscillator circuit presents to the crystal. Specified in picofarads (pF), Load Capacitance is comprised of a combination of the circuit’s discrete load capacitance, stray board ca-

Glossary

pacitance, and capacitance from semiconductor Miller effects. When an oscillator circuit presents some amount of load capacitance to a crystal, the crystal is termed "Parallel Load Resonant," and a value of Load Capacitance must be specified. If the circuit does not exhibit any capacitive loading, the crystal is termed "Series Resonant", and no value of Load Capacitance is specified. The "Parallel Load Resonant" operating frequency of a quartz crystal is based on the equation below:

$$F_L = F_S \left(\frac{C_1}{2(C_0 + C_L)} + 1 \right)$$

Where: F_S = Series Resonant Frequency (MHz)
F_L = Parallel Load Resonant Frequency)MHz)
C_L = Crystal Load Capacitance (pF)
C_0 = Crystal Shunt Capacitance (pF)
C_1 = Crystal Motional Capacitance (pF)

SHUNT CAPACITANCE (C0)

The static capacitance between the crystal terminals. Measured in picofarads (pF), shunt capacitance is present whether the device is oscillating or not (unrelated to the piezoelectric effect of the quartz). Shunt capacitance is derived from the dielectric of the quartz, the area of the crystal electrodes, and the capacitance presented by the crystal holder.

START-UP TIME

The specified time from oscillator power-up to the time the oscillator reaches steady state oscillation.

STORAGE TEMPERATURE RANGE

The minimum and maximum temperatures that the device can be stored or exposed to when in a nonoscillation state. After exposing or storing the device at the minimum or maximum temperatures for a length of time, all of the operating specifications are guaranteed over the specified Operating Temperature Range.

SUPPLY VOLTAGE

The DC input voltage necessary for oscillator operation, specified in volts.

SYMMETRY

Symmetry is defined as the ratio of amount of time the voltage is in the logic "1" state compared to the time in the logic "0" state. The measurements are taken at the 50% points of the voltage transition between the two logic states.

The time period of one cycle of the waveform is calculated first as below.

$$\frac{1}{\text{Frequency in Hz}} = \text{Time period in seconds}$$

Next, the time period of the logic "1" state is measured from the 50% point of the waveform's positive voltage transition to the 50% point of the waveform's negative voltage transition, then compared to the total waveform period. The calculation for symmetry is shown below:

$$\frac{\text{Logic "1" time in seconds}}{\text{Period of one cycle}} \times 100 = \%\ \text{Symmetry}$$

For the % symmetry of the logic "0" state, subtract the logic "1" symmetry from 100%. For example, 40/60% means that the waveform is in its logic "1" state 40% and in the logic "0" state 60% of the total waveform time period.

TRI-STATE

An oscillator with the tri-state feature allows the output to be placed into a high impedance state with no output oscillation present. This feature is activated by the application of a logic control voltage to pin 1 of the oscillator.

TYPE/ANGLE OF QUARTZ CUT

The type and angle of a quartz cut affects the crystal device operating parameters, the most significant being frequency stability over temperature. The frequency stability is dependent upon the plane or the angle of the crystal element in relation to the crystalline axes of the crystal. The plane or angle is referred to as the crystal "cut". A common type of thickness shear crystal fabricated from Y bar quartz is the "AT" cut. The frequency stability and operating temperature range required by the customer determine the angle of cut utilized.