American Opto Plus LED Corp.
L955T-MUBC
3.5 x 2.8 x 0.7mm High Output Blue PLCC-2

MAIN FEATURES:
- Low current requirement
- Wide viewing angle
- IR Reflow Soldering
- I.C. compatible

FEATURES:

- High Luminous Output Function Blue SMD LED (InGaN)
- PLCC-2 3.5 x 2.8mm standard package with heat sink
- High reliability package
- Wide viewing angle 120 degree
- Available in 8mm carrier tape on 7 inch reel (2000 pieces)

PACKAGE OUTLINES:

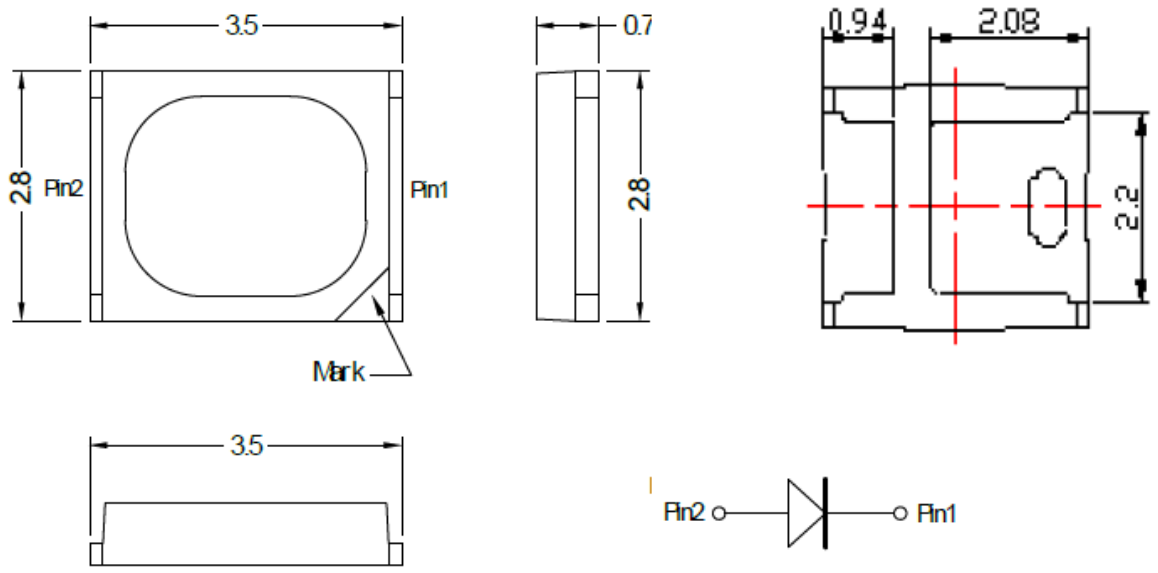

Item	Materials
Package	Heat-Resistant Polymer
Encapsulating Resin	Silicone
Electrodes	Ag Plating Copper Alloy

NOTES:
1. All dimensions are in millimeters (inches);
2. Electrical Connection between all Cathodes is Recommended
3. Specification is preliminary

American Opto Plus LED Corp.

L955T-MUBC

3.5 x 2.8 x 0.7mm High Output Blue PLCC-2

MAIN FEATURES:

- Low current requirement
- Wide viewing angle
- IR Reflow Soldering
- I.C. compatible

ABSOLUTE MAXIMUM RATINGS (Ta=25°C)

Item	Symbol	Max Rating	Unit
DC Forward Current	I_F	250	mA
Peak Pulsed Forward Current	I_{FP}	300	mA
Reverse Voltage	V_R	--	V
Junction Temperature	Tj	125	°C
Junction/ Solder Point	$R_{th\ Js}$	75	°C/W
Junction/ Ambient	$R_{th\ Ja}$	80	°C/W
Power Dissipation	P_d	875	mW
Operating Temperature Range	T_{OPR}	-30 ~ +100	°C
Storage Temperature	T_{STG}	-40 ~ +100	°C
Solder Temperature	T_{SOL}	265°C for 10 sec	

IFP Conditions: Pulse Width ≤ 10 msec and Duty ≤ 1/10

OPTICAL-ELECTRICAL CHARACTERISTICS (Ta=25°C)

Parameter	Symbol	Test Condition	Min	Typ	Max	Unit
Forward Voltage	V_F	I_F = 150mA	--	3.0	3.5	V
Luminous Flux	Φ_V		--	8.0	--	lm
Luminous Intensity	I_V		1900	2600	4200	mcd
Reverse Current	I_R	V_R=5V	--	--	50	μA
Dominant Wavelength	λ_D	I_F=20mA	460	470	480	nm
Peak Wavelength	λ_P		--	465	--	nm
Spectral Half Width	$\Delta\lambda_{1/2}$		--	20	--	nm

Notes: Luminous Intensity Tolerance: ±10%
Please refer to CIE 1931 Chromaticity Diagram

Version 1.0 Date: 08-02-2013 Specifications are subject to change without notice
American Opto Plus LED Corp. 1206 E. Lexington Ave. , Pomona CA 91766 Tel: 909-465-0080 Fax: 909-465-0130 www.aopled.com

LUMINOUS INTENSITY BIN TABLE

I_F=150mA

Rank Name	Min (mcd)	Max (mcd)
S	1900	2500
T	2500	3200
U	3200	4200

Tolerance for each bin is ± 10%

COLOR BIN TABLE

I_F=150mA

Rank Name	Min (nm)	Max (nm)
1	450	455
2	455	460
3	460	465
4	465	470

Tolerance for each bin is ± 1nm

Note:
1. One delivery will include several color ranks and I_V ranks of products.
   The quantity-ratio of the different rank is decided by AOP.
2. Bin Name typed on the Label: I_V Rank + Color Rank.
   For example, **BinS4 means I_V: 1900~2500mcd and Color: 465~470nm.**
3. AOP has the right to update the information without notice.
   Please confirm the spec details before placing an order.

OPTICAL CHARACTERISTIC CURVES

Forward Current vs. Forward Voltage

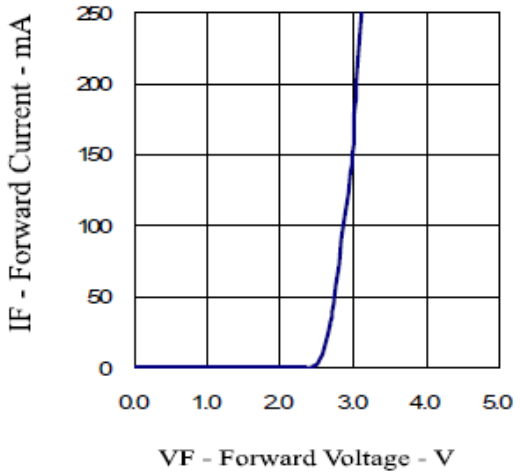

Relative Intensity vs. Forward Current

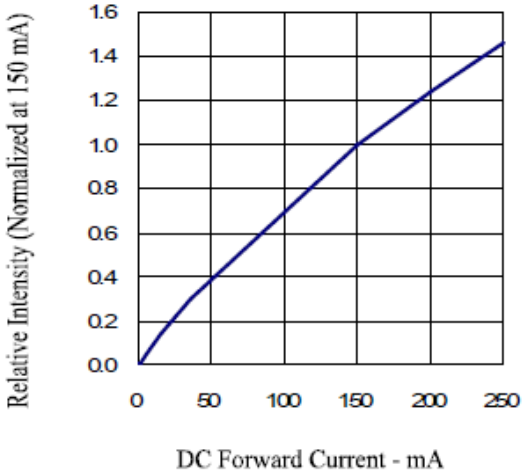

Forward Current vs. Ambient Temperature

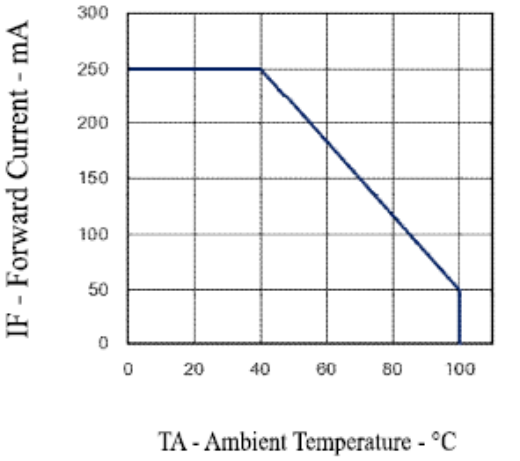

Relative Intensity vs. Wavelength

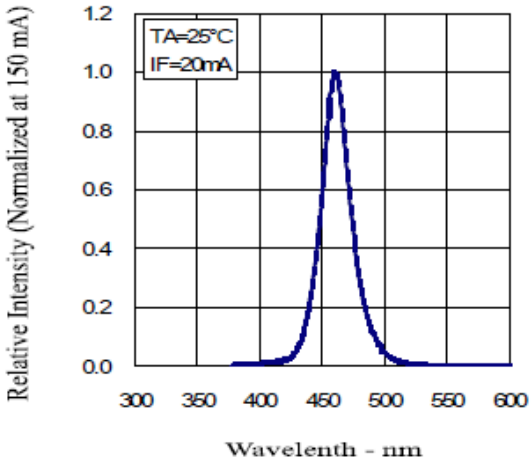

RADIATION PATTERN

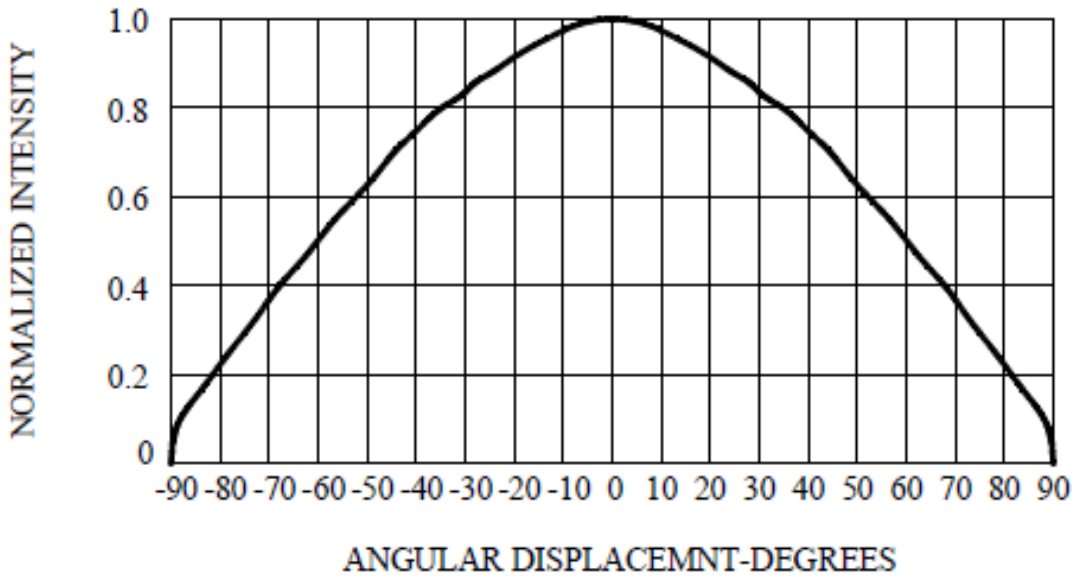

Recommended Soldering Pad Pattern

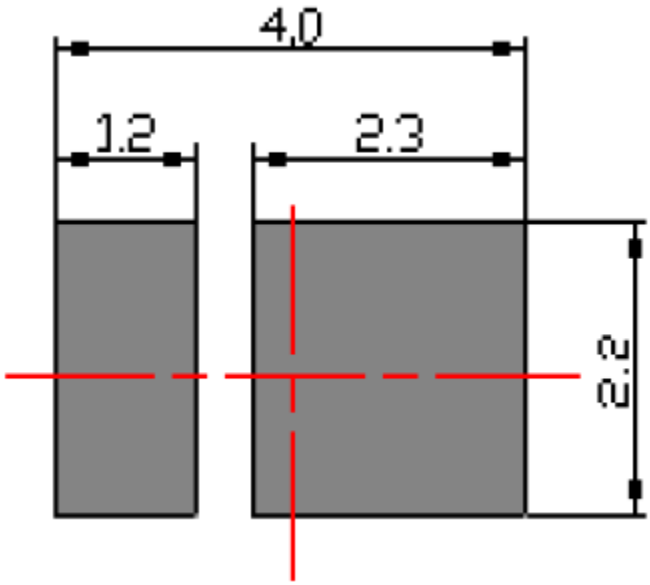

SOLDERING CONDITIONS:

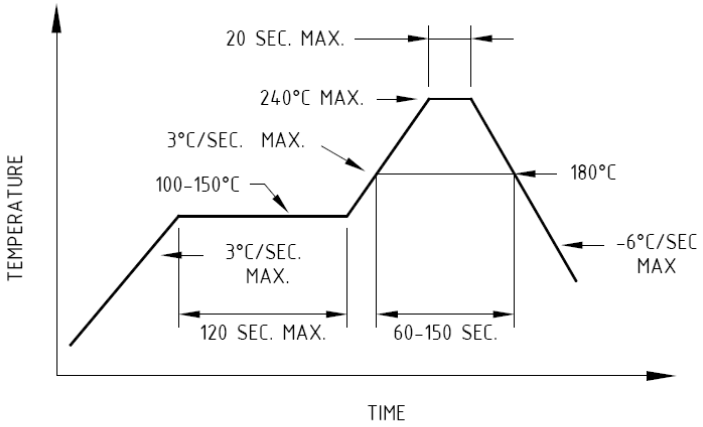

Recommended reflow soldering profile

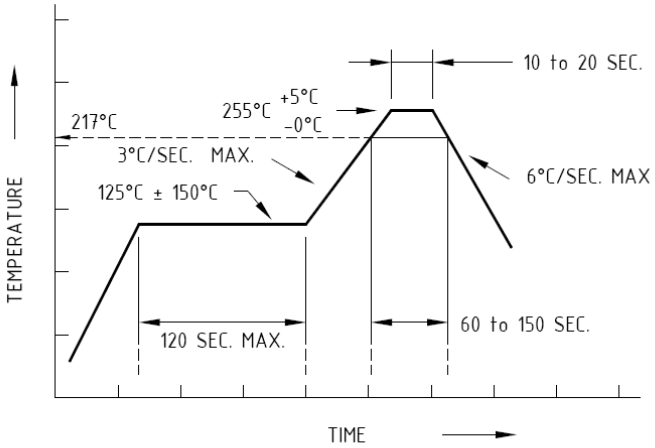

Recommended Pb-free reflow soldering profile

- Repairing should not be done after the LEDs have been soldered. When repairing is unavoidable, a double-head soldering iron should be used. It should be confirmed beforehand whether the characteristics of the LEDs will or will not be damaged by repairing.
- Reflow soldering should not be done more than two times.
- When soldering, do no put stress on the LEDs during heating.
- After soldering, do not warp the circuit board.

TAPE DIMENSIONS

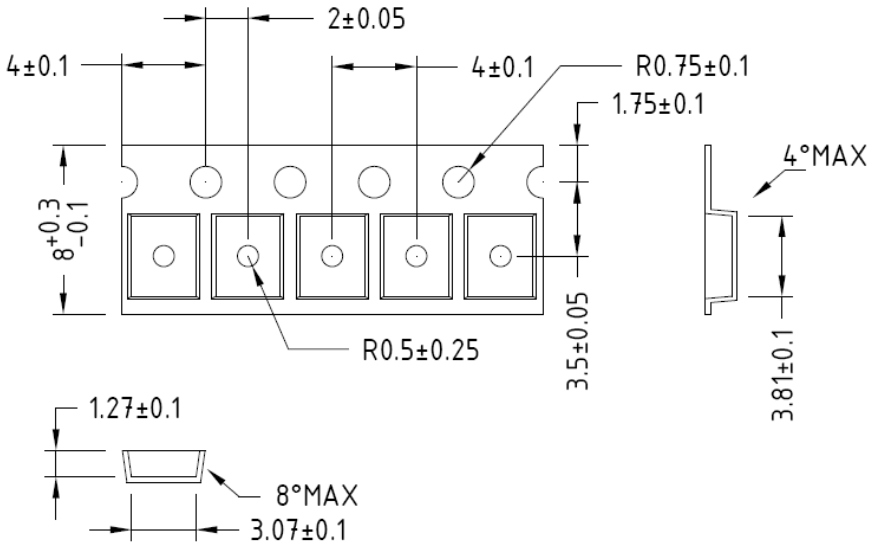

TAPE LEADER AND TRAILER DIMENSION

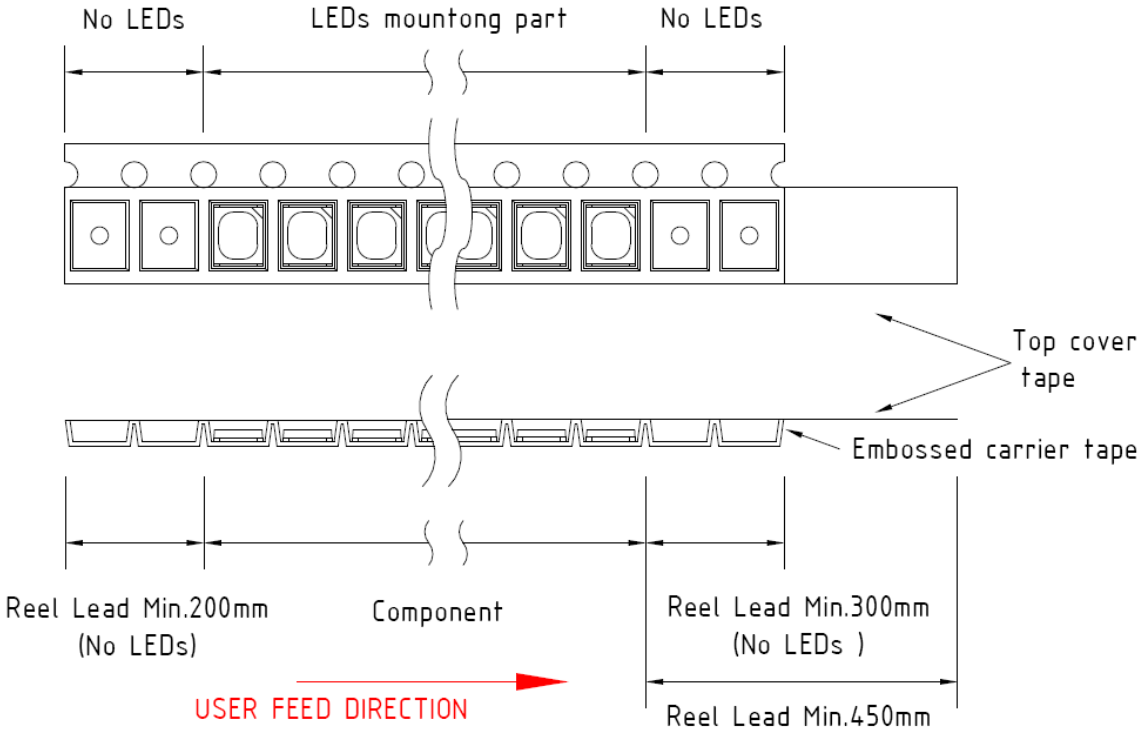

REEL DIMENSION

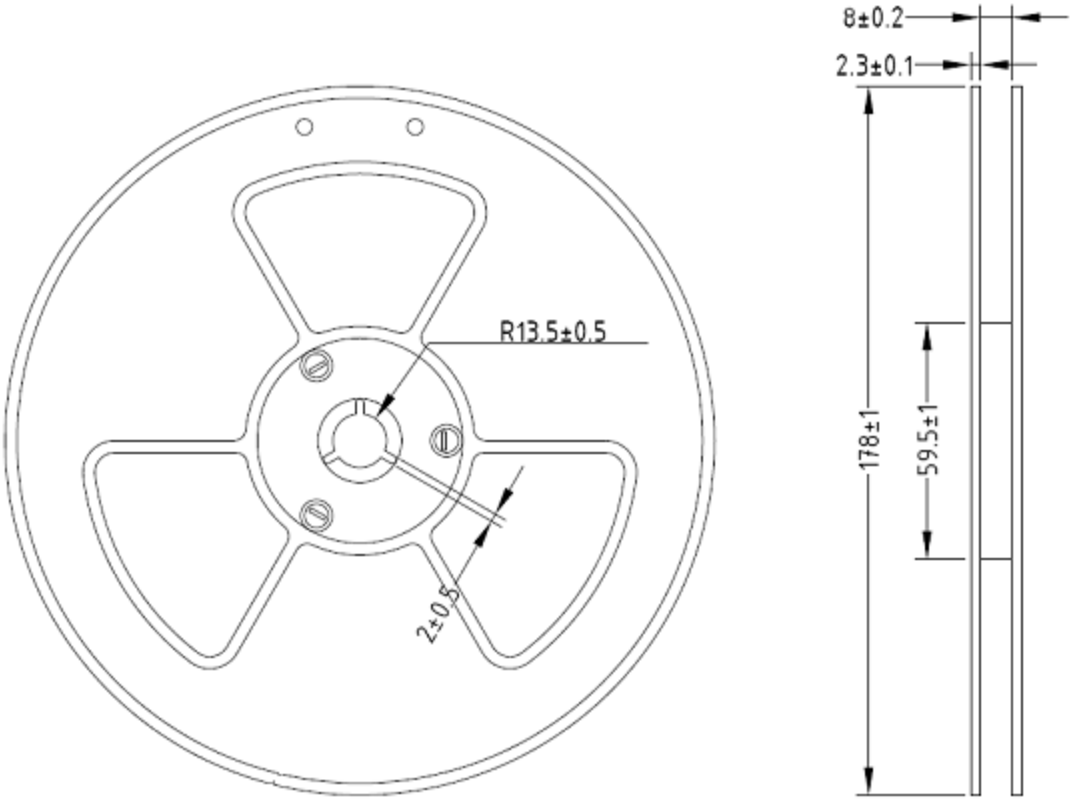

Note: Baking is required under the following conditions:

The pack has been open for more than four weeks.

Baking recommended conditions.

60 ± 5 °C for 20 hours.

MAIN FEATURES:
- Low current requirement
- Wide viewing angle
- IR Reflow Soldering
- I.C. compatible

MOISTURE SENSITIVITY

AOP's SMD LEDs are shipped in sealed, moisture-barrier bags (MBB) designed for long shelf life. If SMD LED has exposed with moist environments before soldering, this may cause damage to SMD LED during soldering (reflow) operation.

STORAGE/ FLOOR TIME

Condition	Temperature(C)	Humidity(RH)	Period of Time
Before Open	30	60	6 month from shipping date
After Open	30	60	Within 48 hours

- MSL of this product are MSL4, please see IPC/JEDEC STD020D for more detail.
- LEDs reach floor time may be damaged while soldering/ reflow processing, please discard the LED.
- If RH indicator card show 60% RH when unseal the package, please bake/ discard the LED.

RESEAL

- AOP's aluminum MBB may reuse as to reseal the unused LED if MBB has not been damaged or had any holes on it.
- Moisture absorbent material (silica gel) may be reuse if it does not become pink.
- Proper resealed LED's floor time will not reset, only stop counting until open.
- If RH indicator card show 60% RH when open the package, please bake/ discard the LED.

American Opto Plus LED Corp. 1206 E. Lexington Ave. , Pomona CA 91766 Tel: 909-465-0080 Fax: 909-465-0130 www.aopled.com