American Opto Plus LED Corp.
0.28” SMD Type LED Display
SMA284LA G/W
SMC284LA G/W

FEATURES

- 0.28 inch (7.00 mm) Digit Height.
- SMD type.
- Low current operation.
- Gray face, White segment.
- RoHS compliant, Pb Free.

DESCRIPTION

The SMA284LA G/W & SMC284LA G/W are 0.28 inch (7.00mm) height Quadruple 7-segment displays.

This device utilizes Super Bright Amber LED chip which are made from AlGaInP On a transparent GaAs, substrate.

The display has Gray face, White segment.

DEVICE

PART NO	DESCRIPTION
SMA284LA G/W	Common Anode
SMC284LA G/W	Common Cathode

RoHS Compliance **Pb free.**

American Opto. Plus LED Corp. 1206 E. Lexington Ave, Pomona Ca 91766
Website: www.aopled.com Tel: 909-465-0080 Fax: 909-465-0130

American Opto Plus LED Corp.
0.28” SMD Type LED Display
SMA284LA G/W
SMC284LA G/W

MECHANICAL DIMENSIONS

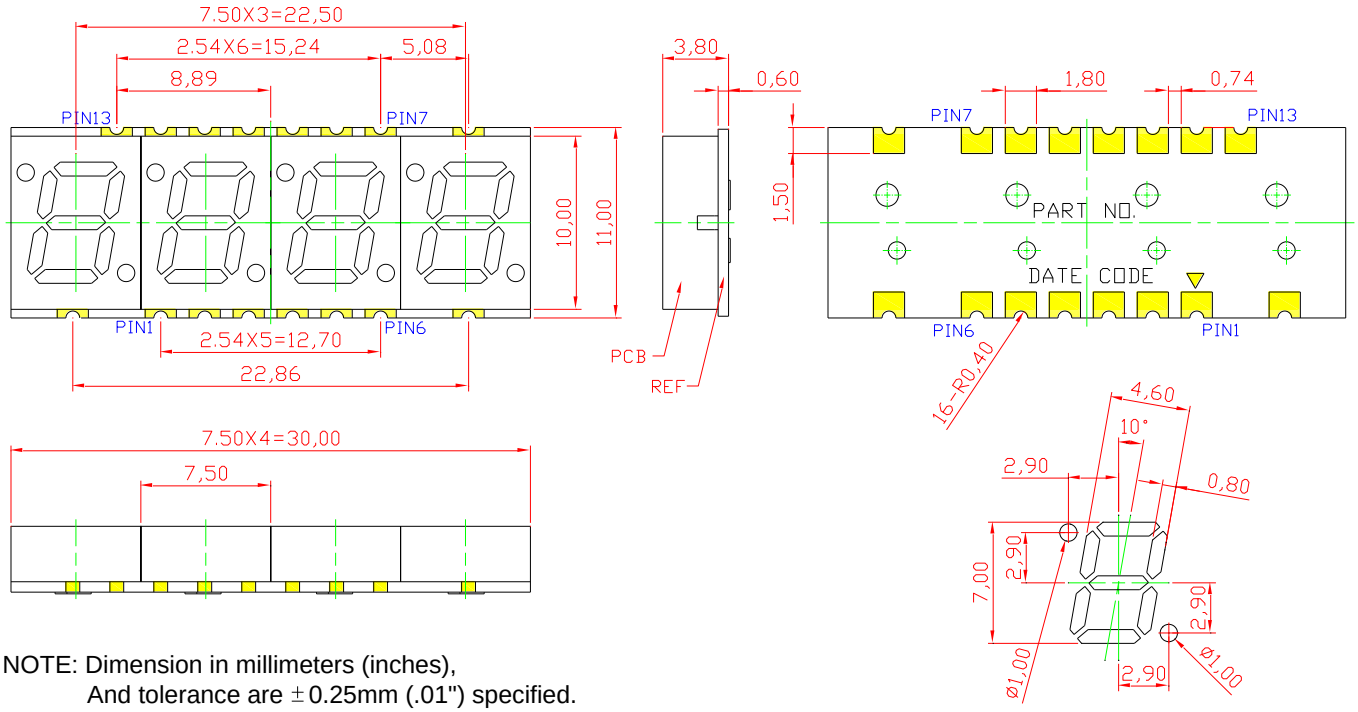

NOTE: Dimension in millimeters (inches),
And tolerance are ±0.25mm (.01") specified.

American Opto Plus LED Corp.
0.28” SMD Type LED Display
SMA284LA G/W
SMC284LA G/W

TYPICAL INTERNAL EQUIVALENT CIRCUIT

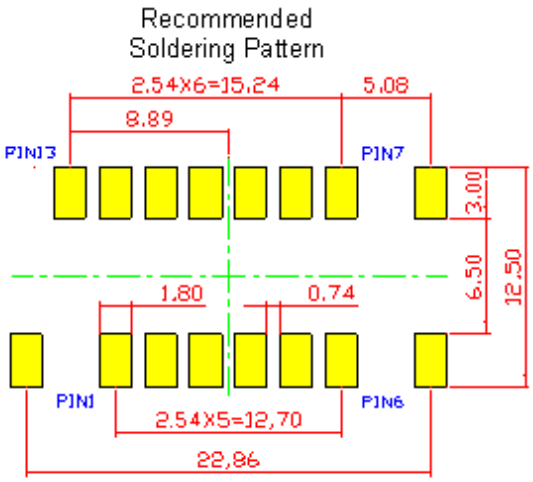

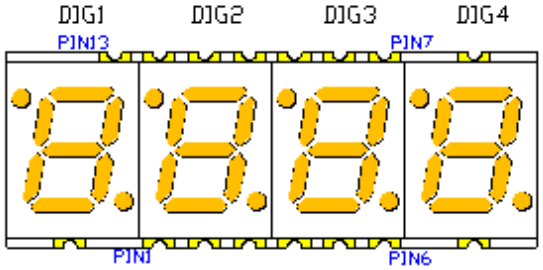

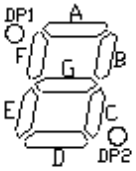

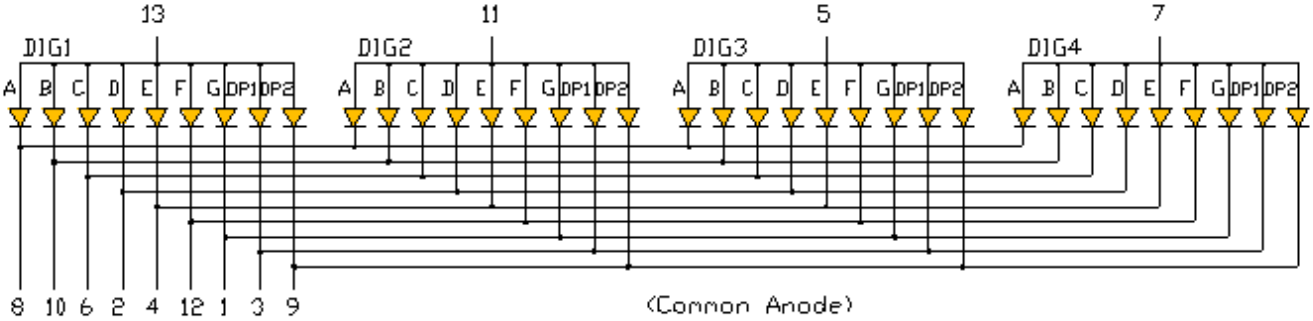

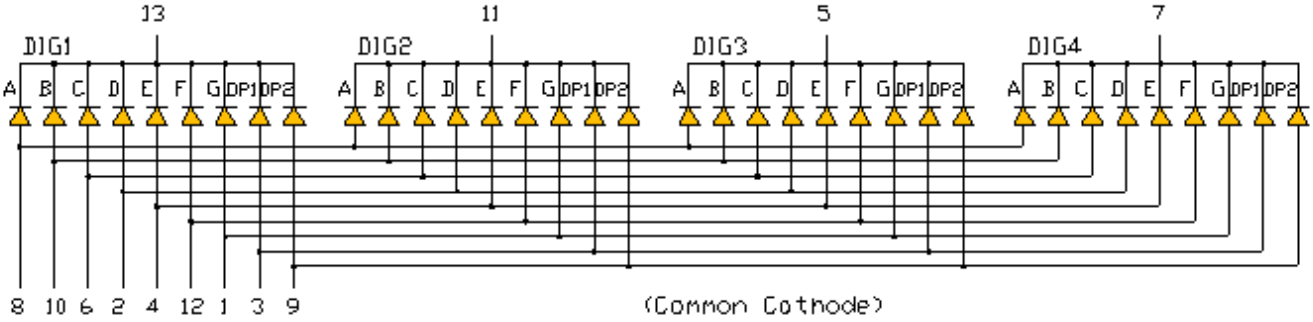

American Opto Plus LED Corp.
0.28” SMD Type LED Display
SMA284LA G/W
SMC284LA G/W

SUPER BRIGHT AMBER (AlGaInP/GaAs)

ABSOLUTE MAXIMUM RATING AT Ta=25°C

Parameter	Symbol	Maximum Rating	Unit
Power dissipation	P_{AD}	70	mW
Derating liner from 25°C	-	0.28	mA / °C
Continuous forward current	I_{AF}	25	mA
Peak current (duty cycle 1/10, 1kHz)	I_{PF}	90	mA
Reverse voltage	V_R	5	V
Operating temperature	T_{OPR}	-40 to +105	°C
Storage temperature	T_{STG}	-40 to +105	°C

ELECTRICAL - OPTICAL CHARACTERISTICS AT Ta=25°C

Characteristic	Symbol	Condition	Min.	Type.	Max.	Unit
Forward Voltage, (Per Dice)	V_F	I_F =20mA	-	2.0	2.6	V
Reverse Current, (Per Dice)	I_R	V_R =5V	-	-	10	μA
Peak Wavelength	λ_P	I_F =20mA	-	612	-	nm
Dominant Wavelength	λ_D	I_F =20mA	-	610	-	nm
Luminous Intensity	I_V	I_F =20mA	-	10	-	mcd
Spectral radiation bandwidth	$\Delta\lambda$	I_F =20mA	-	20	-	nm

American Opto. Plus LED Corp. 1206 E. Lexington Ave, Pomona Ca 91766
Website: www.aopled.com Tel: 909-465-0080 Fax: 909-465-0130

American Opto Plus LED Corp.
0.28” SMD Type LED Display
SMA284LA G/W
SMC284LA G/W

SUPER BRIGHT AMBER (AlGaInP/GaAs) CURVE

Typical Electro-optical Characteristic Curves
(25 ℃ Free Air Temperature Unless Otherwise Specified)

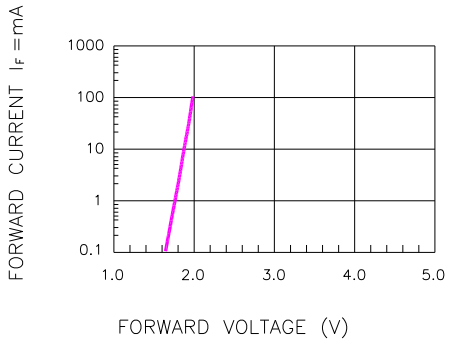

Fig.1 FORWARD CURRENT VS. FORWARD VOLTAGE

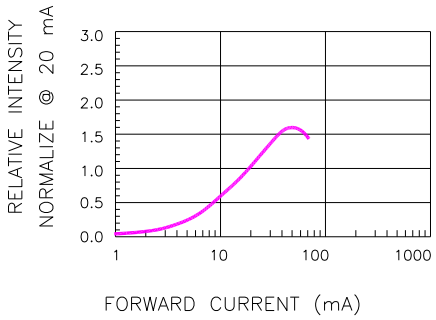

Fig.2 RELATIVE INTENSITY VS. FORWARD CURRENT

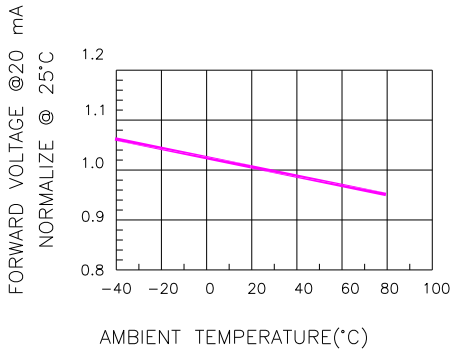

Fig.3 FORWARD VOLTAGE VS. TEMPERATURE

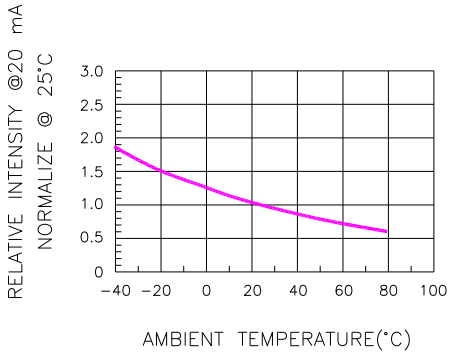

Fig.4 RELATIVE INTENSITY VS. TEMPERATURE

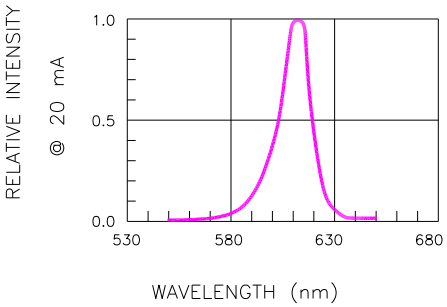

Fig.5 RELATIVE INTENSITY VS. WAVELENGTH

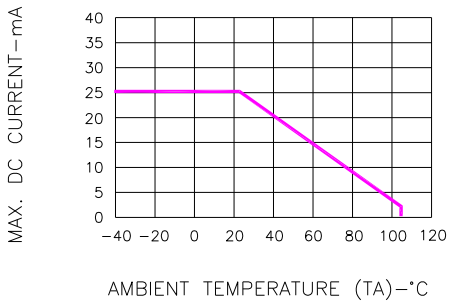

Fig.6 MAX. ALLOWABLE DC CURRENT VS. AMBIENT TEMPERATURE

RECOMMEND SOLDERING PROFILE

SMT Soldering Profile

Pb free reflow soldering Profile

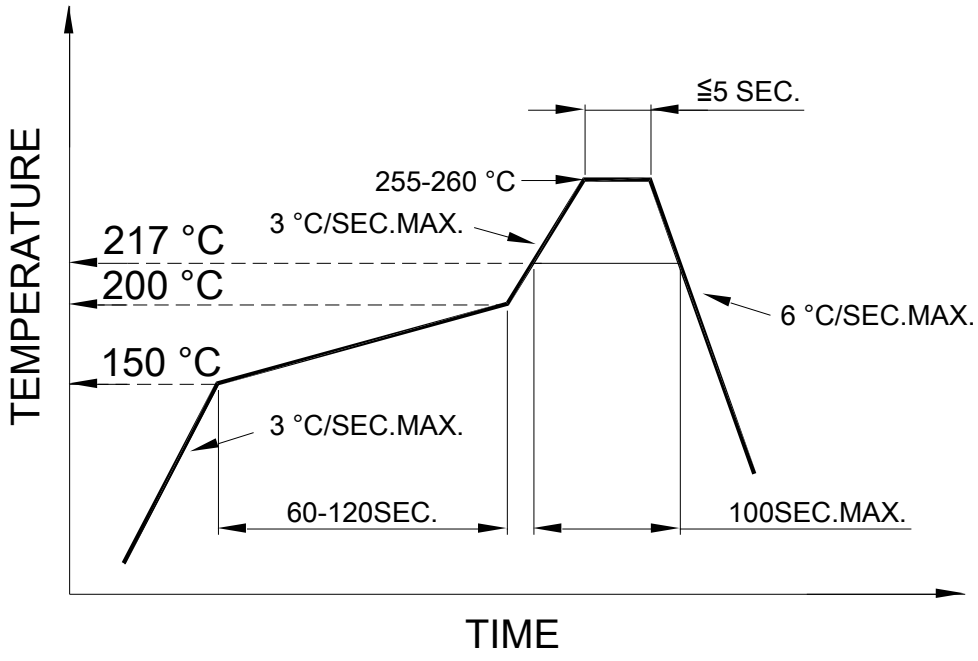

SOLDERING IRON

Basic specification : ≦4 seconds when 260℃, If temperature is higher, time should be shorter (+10℃→1 sec). Power dissipation of iron should be smaller than 15W, and temperature should be controllable. Surface temperature of the device should be under 230℃.

REWORK

Customer must finish rework within ≦3 sec under 350℃.

American Opto. Plus LED Corp. 1206 E. Lexington Ave, Pomona Ca 91766
Website: www.aopled.com Tel: 909-465-0080 Fax: 909-465-0130