# CY62128

## 128K x 8 Static RAM

### Features

- **4.5V – 5.5V operation**
- **CMOS for optimum speed/power**
- **Low active power (70 ns, LL version)**
  **— 330 mW (max.) (60 mA)**
- **Low standby power (70 ns, LL version)**
  **— 110 μW (max.) (20 μA)**
- **Automatic power-down when deselected**
- **TTL-compatible inputs and outputs**
- **Easy memory expansion with $\overline{CE}_1$, $CE_2$, and $\overline{OE}$ options**

### Functional Description

The CY62128 is a high-performance CMOS static RAM organized as 131,072 words by 8 bits. Easy memory expansion is provided by an active LOW chip enable ($\overline{CE}_1$), an active HIGH chip enable ($CE_2$), an active LOW output enable ($\overline{OE}$), and three-state drivers. This device has an automatic power-down feature that reduces power consumption by more than 75% when deselected.

Writing to the device is accomplished by taking chip enable one ($\overline{CE}_1$) and write enable ($\overline{WE}$) inputs LOW and chip enable two ($CE_2$) input HIGH. Data on the eight I/O pins ($I/O_0$ through $I/O_7$) is then written into the location specified on the address pins ($A_0$ through $A_{16}$).

Reading from the device is accomplished by taking chip enable one ($\overline{CE}_1$) and output enable ($\overline{OE}$) LOW while forcing write enable ($\overline{WE}$) and chip enable two ($CE_2$) HIGH. Under these conditions, the contents of the memory location specified by the address pins will appear on the I/O pins.

The eight input/output pins ($I/O_0$ through $I/O_7$) are placed in a high-impedance state when the device is deselected ($\overline{CE}_1$ HIGH or $CE_2$ LOW), the outputs are disabled ($\overline{OE}$ HIGH), or during a write operation ($\overline{CE}_1$ LOW, $CE_2$ HIGH, and $\overline{WE}$ LOW).

The CY62128 is available in a standard 450-mil-wide SOIC, 32-pin TSOP type I and STSOP packages.

### Logic Block Diagram

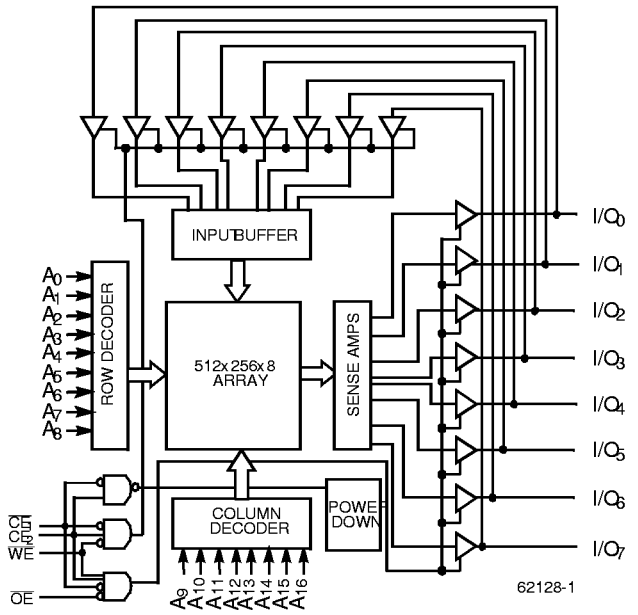


### Pin Configurations

**Top View**
**SOIC**

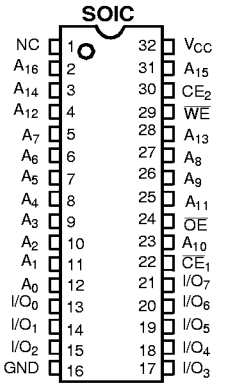


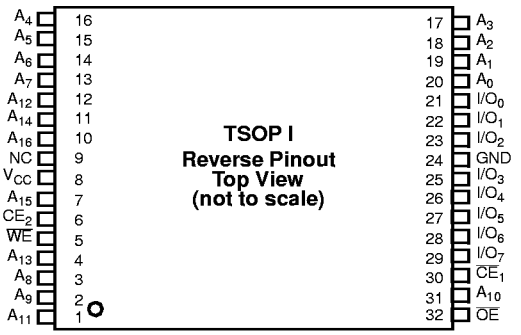


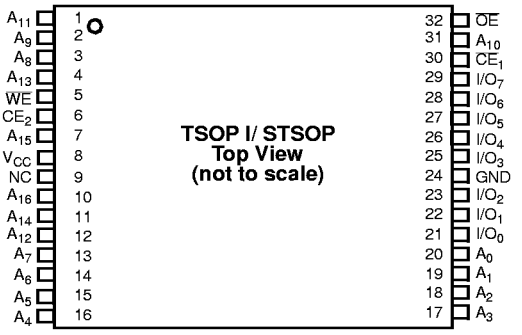

## Selection Guide

| | | | CY62128-55 | CY62128-70 |
|---|---|---|---|---|
| Maximum Access Time (ns) | | | 55 | 70 |
| Maximum Operating Current | Commercial | L | 50 | 40 |
| | | LL | 50 | 40 |
| Maximum CMOS Standby Current | Commercial | L | 80 | 80 |
| | | LL | 15 | 15 |

## Maximum Ratings

(Above which the useful life may be impaired. For user guidelines, not tested.)

Storage Temperature ..... –65°C to +150°C

Ambient Temperature with Power Applied ..... –55°C to +125°C

Supply Voltage on $V_{CC}$ to Relative GND[1] .... –0.5V to +7.0V

DC Voltage Applied to Outputs in High Z State[1] ..... –0.5V to $V_{CC}$ + 0.5V

DC Input Voltage[1] ..... –0.5V to $V_{CC}$ + 0.5V

Current into Outputs (LOW) ..... 20 mA

Static Discharge Voltage ..... >2001V (per MIL-STD-883, Method 3015)

Latch-Up Current ..... >200 mA

## Operating Range

| Range | Ambient Temperature[2] | $V_{CC}$ |
|---|---|---|
| Commercial | 0°C to +70°C | 5V ± 10% |
| Industrial | –40°C to +85°C | 5V ± 10% |

**Notes:**

1. $V_{IL}$ (min.) = –2.0V for pulse durations of less than 20 ns.
2. $T_A$ is the "instant on" case temperature.

## Electrical Characteristics Over the Operating Range

| Parameter | Description | Test Conditions | | | 62128–55 | | | 62128–70 | | | Unit |
|---|---|---|---|---|---|---|---|---|---|---|---|
| | | | | | Min. | Typ[3] | Max. | Min. | Typ[3] | Max. | |
| $V_{OH}$ | Output HIGH Voltage | $V_{CC}$ = Min., $I_{OH}$ = –1.0 mA | | | 2.4 | | | 2.4 | | | V |
| $V_{OL}$ | Output LOW Voltage | $V_{CC}$ = Min., $I_{OL}$ = 2.1mA | | | | | 0.4 | | | 0.4 | V |
| $V_{IH}$ | Input HIGH Voltage | | | | 2.2 | | $V_{CC}$ + 0.3 | 2.2 | | $V_{CC}$ + 0.3 | V |
| $V_{IL}$ | Input LOW Voltage[1] | | | | –0.3 | | 0.8 | –0.3 | | 0.8 | V |
| $I_{IX}$ | Input Load Current | GND ≤ $V_I$ ≤ $V_{CC}$ | | | –1 | | +1 | –1 | | +1 | µA |
| $I_{OZ}$ | Output Leakage Current | GND ≤ $V_I$ ≤ $V_{CC}$, Output Disabled | | | +1 | | +1 | +1 | | +1 | µA |
| $I_{OS}$ | Output Short Circuit Current[4] | $V_{CC}$ = Max., $V_{OUT}$ = GND | | | | | –300 | | | –300 | mA |
| $I_{CC}$ | $V_{CC}$ Operating Supply Current | $V_{CC}$ = Max. $I_{OUT}$ = 0 mA, f = $f_{MAX}$ = $1/t_{RC}$ | Com'l | | | 40 | 115 | | 40 | 110 | mA |
| | | | | L | | 30 | 70 | | 30 | 60 | mA |
| | | | | LL | | 30 | 70 | | 30 | 60 | mA |
| | | | Ind.'l | | | 40 | 115 | | 40 | 110 | mA |
| | | | | L | | 30 | 70 | | 30 | 70 | mA |
| | | | | LL | | 30 | 70 | | 30 | 70 | mA |
| $I_{SB1}$ | Automatic CE Power-Down Current —TTL Inputs | Max. $V_{CC}$, $\overline{CE}_1$ ≥ $V_{IH}$ or $CE_2$ ≤ $V_{IL}$, $V_{IN}$ ≥ $V_{IH}$ or $V_{IN}$ ≤ $V_{IL}$, f = $f_{MAX}$ | Com'l | | | 0.3 | 25 | | 0.3 | 1 | mA |
| | | | | L | | 0.15 | 3 | | 0.15 | 1 | mA |
| | | | | LL | | 0.1 | 2 | | 0.1 | 1 | mA |
| | | | Ind.'l | | | 0.3 | 25 | | 0.3 | 1 | mA |
| | | | | L | | 0.15 | 3 | | 0.15 | 1 | mA |
| | | | | LL | | 0.1 | 2 | | 0.1 | 1 | mA |
| $I_{SB2}$ | Automatic CE Power-Down Current —CMOS Inputs | Max. $V_{CC}$, $\overline{CE}_1$ ≥ $V_{CC}$ – 0.3V, or $CE_2$ ≤ 0.3V, $V_{IN}$ ≥ $V_{CC}$ – 0.3V, or $V_{IN}$ ≤ 0.3V, f=0 | Com'l | | | 0.4 | 500 | | 0.4 | 500 | µA |
| | | | | L | | | 100 | | | 100 | µA |
| | | | | LL | | | 20 | | | 20 | µA |
| | | | Ind | | | 0.4 | 500 | | 0.4 | 500 | µA |
| | | | | L | | | 100 | | | 100 | µA |
| | | | | LL | | | 40 | | | 40 | µA |

## Capacitance[5]

| Parameter | Description | Test Conditions | Max. | Unit |
|---|---|---|---|---|
| $C_{IN}$ | Input Capacitance | $T_A$ = 25°C, f = 1 MHz, $V_{CC}$ = 5.0V | 9 | pF |
| $C_{OUT}$ | Output Capacitance | | 9 | pF |

**Notes:**

3. Typical values are included for reference only and are not tested or guaranteed. Typical values are an average of the distribution across normal production variations as measured at $V_{CC}$ = 5.0V, $T_A$ = 25 °C, and $t_{AA}$=70ns
4. Not more than one output should be shorted at one time. Duration of the short circuit should not exceed 30 seconds.
5. Tested initially and after any design or process changes that may affect these parameters.

## AC Test Loads and Waveforms

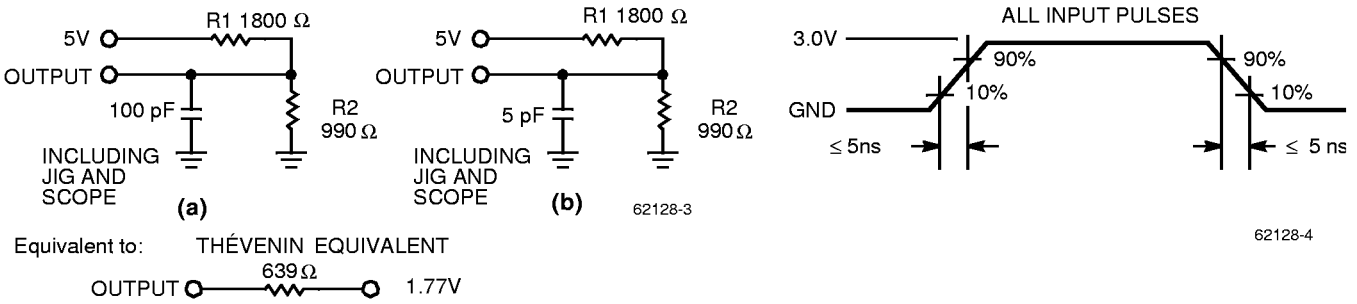


## Switching Characteristics[6] Over the Operating Range

| Parameter | Description | 62128–55 | | 62128–70 | | Unit |
|---|---|---|---|---|---|---|
| | | Min. | Max. | Min. | Max. | |
| **READ CYCLE** | | | | | | |
| $t_{RC}$ | Read Cycle Time | 55 | | 70 | | ns |
| $t_{AA}$ | Address to Data Valid | | 55 | | 70 | ns |
| $t_{OHA}$ | Data Hold from Address Change | 5 | | 5 | | ns |
| $t_{ACE}$ | $\overline{CE}_1$ LOW to Data Valid, $CE_2$ HIGH to Data Valid | | 55 | | 70 | ns |
| $t_{DOE}$ | $\overline{OE}$ LOW to Data Valid | | 20 | | 35 | ns |
| $t_{LZOE}$ | $\overline{OE}$ LOW to Low Z | 0 | | 0 | | ns |
| $t_{HZOE}$ | $\overline{OE}$ HIGH to High Z[7,8] | | 20 | | 25 | ns |
| $t_{LZCE}$ | $\overline{CE}_1$ LOW to Low Z, $CE_2$ HIGH to Low Z[8] | 5 | | 5 | | ns |
| $t_{HZCE}$ | $\overline{CE}_1$ HIGH to High Z, $CE_2$ LOW to High Z[7,8] | | 20 | | 25 | ns |
| $t_{PU}$ | $\overline{CE}_1$ LOW to Power-Up, $CE_2$ HIGH to Power-Up | 0 | | 0 | | ns |
| $t_{PD}$ | $\overline{CE}_1$ HIGH to Power-Down, $CE_2$ LOW to Power-Down | | 55 | | 70 | ns |
| **WRITE CYCLE**[9] | | | | | | |
| $t_{WC}$ | Write Cycle Time | 55 | | 70 | | ns |
| $t_{SCE}$ | $\overline{CE}_1$ LOW to Write End, $CE_2$ HIGH to Write End | 45 | | 60 | | ns |
| $t_{AW}$ | Address Set-Up to Write End | 45 | | 60 | | ns |
| $t_{HA}$ | Address Hold from Write End | 0 | | 0 | | ns |
| $t_{SA}$ | Address Set-Up to Write Start | 0 | | 0 | | ns |
| $t_{PWE}$ | $\overline{WE}$ Pulse Width | 45 | | 50 | | ns |
| $t_{SD}$ | Data Set-Up to Write End | 25 | | 30 | | ns |
| $t_{HD}$ | Data Hold from Write End | 0 | | 0 | | ns |
| $t_{LZWE}$ | $\overline{WE}$ HIGH to Low Z[8] | 5 | | 5 | | ns |
| $t_{HZWE}$ | $\overline{WE}$ LOW to High Z[7, 8] | | 20 | | 25 | ns |

**Notes:**

6. Test conditions assume signal transition time of 5ns or less, timing reference levels of 1.5V, input pulse levels of 0 to 3.0V, and output loading of the specified $I_{OL}/I_{OH}$ and 100pF load capacitance.
7. $t_{HZOE}$, $t_{HZCE}$, and $t_{HZWE}$ are specified with a load capacitance of 5 pF as in part (b) of AC Test Loads. Transition is measured ±500 mV from steady-state voltage.
8. At any given temperature and voltage condition, $t_{HZCE}$ is less than $t_{LZCE}$, $t_{HZOE}$ is less than $t_{LZOE}$, and $t_{HZWE}$ is less than $t_{LZWE}$ for any given device.
9. The internal write time of the memory is defined by the overlap of $\overline{CE}_1$ LOW, $CE_2$ HIGH, and $\overline{WE}$ LOW. $\overline{CE}_1$ and $\overline{WE}$ must be LOW and $CE_2$ HIGH to initiate a write, and the transition of any of these signals can terminate the write. The input data set-up and hold timing should be referenced to the leading edge of the signal that terminates the write.

## Data Retention Characteristics (Over the Operating Range for "L" and "LL" version only)

| Parameter | Description | | | Conditions[10] | Min. | Typ. | Max. | Unit |
|---|---|---|---|---|---|---|---|---|
| $V_{DR}$ | VCC for Data Retention | | | | 2.0 | | | V |
| $I_{CCDR}$ | Data Retention Current | Coml. | L | $V_{CC}=V_{DR}=3.0V$, $CE \geq V_{CC} - 0.3V$, $V_{IN} \geq V_{CC} - 0.3V$ or, $V_{IN} \leq 0.3V$ | | 0.4 | 100 | µA |
| | | | LL | | | | 20 | µA |
| | | Indl. | L | | | | 100 | µA |
| | | | LL | | | | 20 | µA |
| $t_{CDR}$[3] | Chip Deselect to Data Retention Time | | | | 0 | | | ns |
| $t_R$[3] | Operation Recovery Time | | | | $t_{RC}$ | | | ns |

## Switching Waveforms

### Read Cycle No.1[11,12]

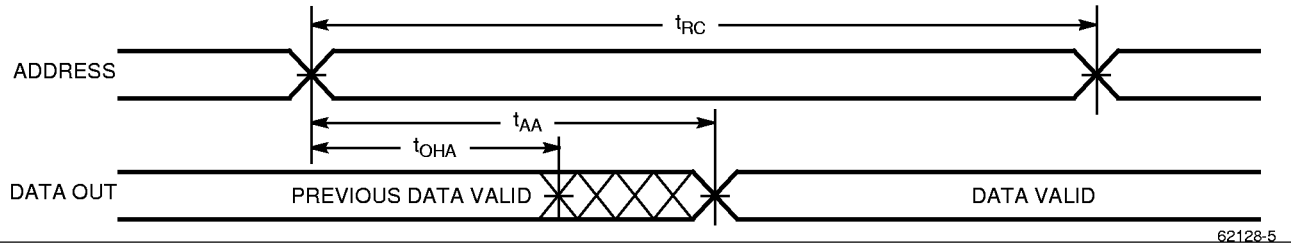


### Read Cycle No. 2 ($\overline{OE}$ Controlled)[12,13]

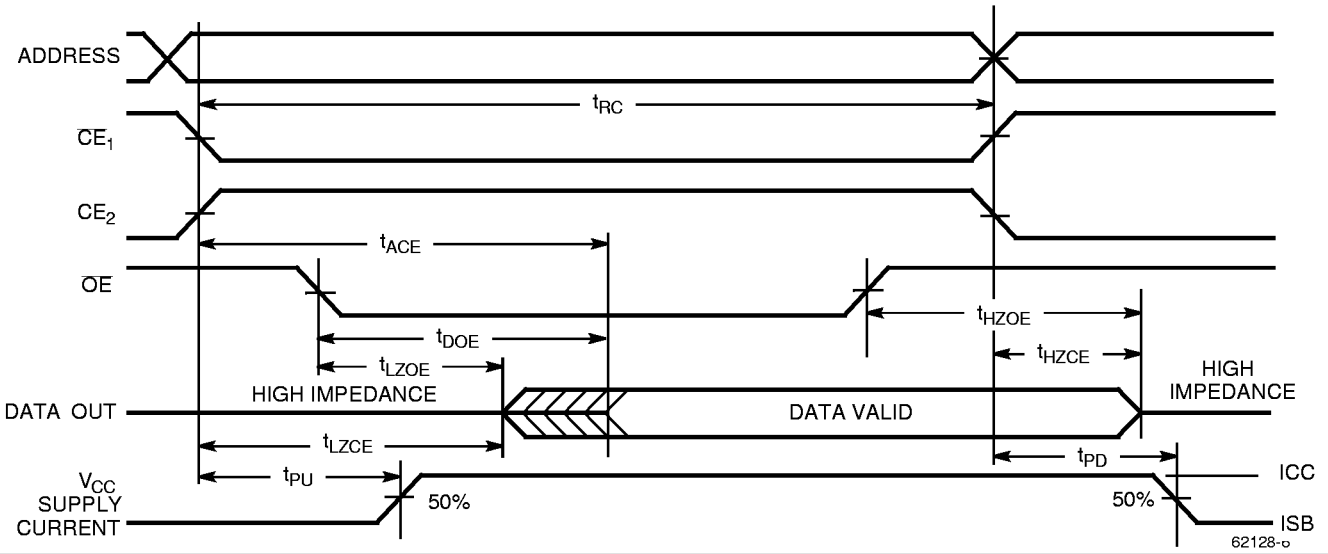


**Notes:**

10. No input may exceed $V_{CC}$ + 0.5V.
11. Device is continuously selected. $\overline{OE}$, $\overline{CE_1} = V_{IL}$, $CE_2 = V_{IH}$.
12. $\overline{WE}$ is HIGH for read cycle.
13. Address valid prior to or coincident with $\overline{CE_1}$ transition LOW and $CE_2$ transition HIGH.

## Switching Waveforms (continued)

### Write Cycle No. 1 ($\overline{CE}_1$ or $CE_2$ Controlled)[14,15]

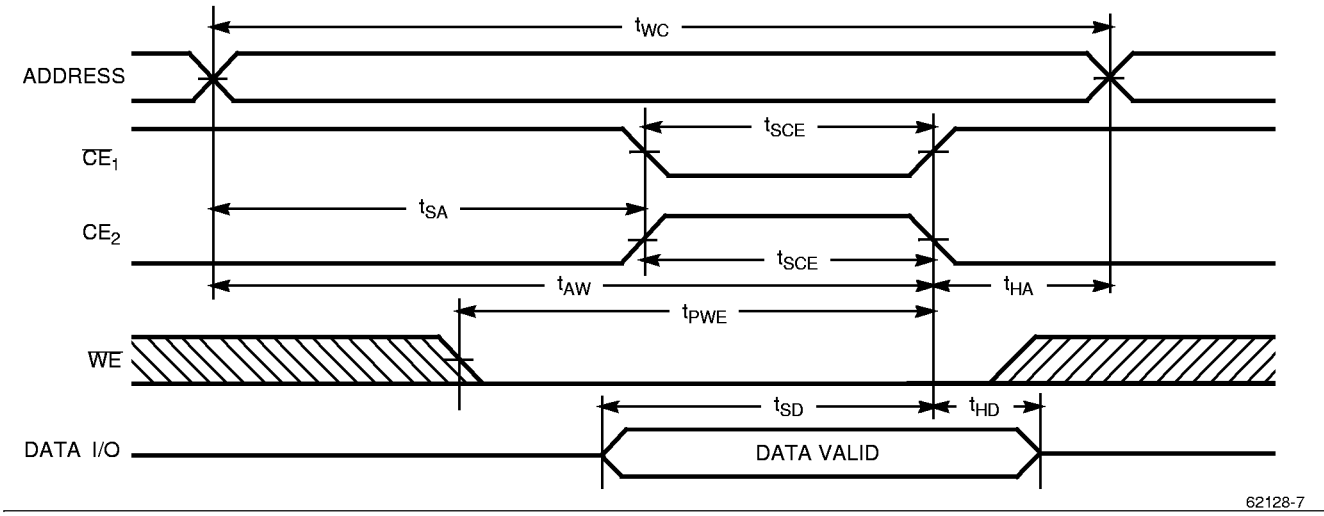


### Write Cycle No. 2 ($\overline{WE}$ Controlled, $\overline{OE}$ HIGH During Write)[14,15]

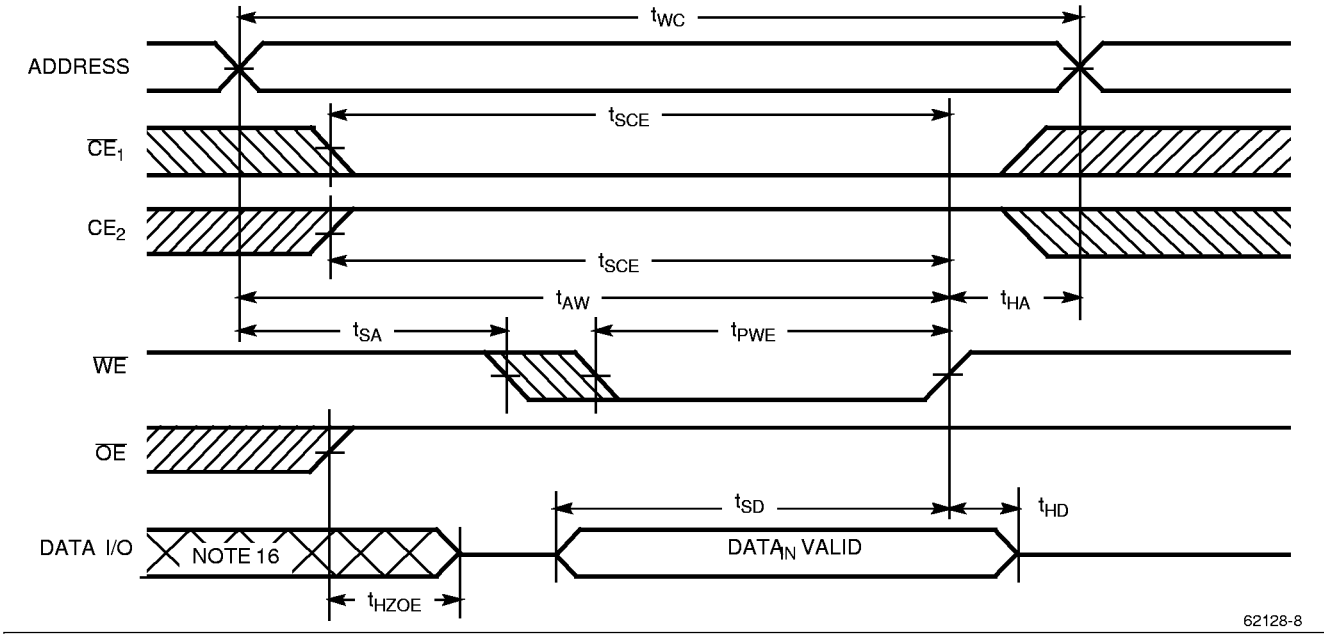


**Notes:**

14. Data I/O is high impedance if $\overline{OE} = V_{IH}$.
15. If $\overline{CE}_1$ goes HIGH or $CE_2$ goes LOW simultaneously with $\overline{WE}$ going HIGH, the output remains in a high-impedance state.
16. During this period the I/Os are in the output state and input signals should not be applied.

## Switching Waveforms (continued)

**Write Cycle No.3 ($\overline{WE}$ Controlled, $\overline{OE}$ LOW)**[14,15]

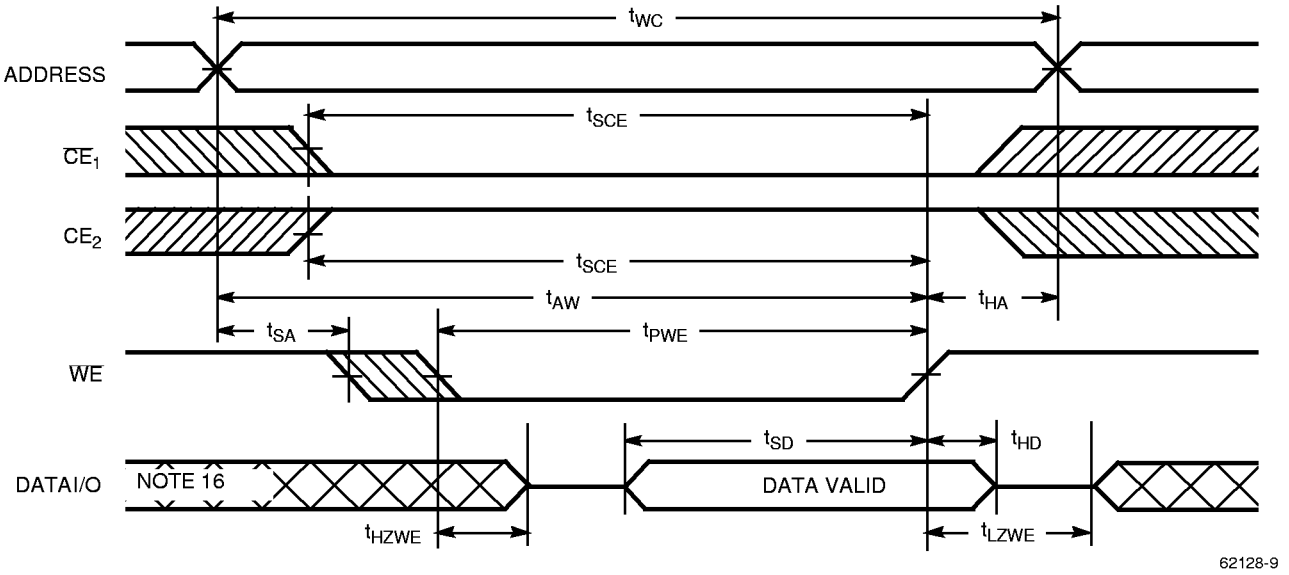


## Truth Table

| $\overline{CE_1}$ | $CE_2$ | $\overline{OE}$ | $\overline{WE}$ | $I/O_0 – I/O_7$ | Mode | Power |
|---|---|---|---|---|---|---|
| H | X | X | X | High Z | Power-Down | Standby ($I_{SB}$) |
| X | L | X | X | High Z | Power-Down | Standby ($I_{SB}$) |
| L | H | L | H | Data Out | Read | Active ($I_{CC}$) |
| L | H | X | L | Data In | Write | Active ($I_{CC}$) |
| L | H | H | H | High Z | Selected, Outputs Disabled | Active ($I_{CC}$) |

## Ordering Information

| Speed (ns) | Ordering Code | Package Name | Package Type | Operating Range |
|---|---|---|---|---|
| 55 | CY62128–55SC | S34 | 32-Lead 450-Mil SOIC | Commercial |
| | CY62128-55ZC | Z32 | 32-Lead TSOP Type I | |
| | CY62128–55ZAC | ZA32 | 32-Lead STSOP Type I | |
| 70 | CY62128–70SC | S34 | 32-Lead 450-Mil SOIC | Commercial |
| | CY62128–70ZC | Z32 | 32-Lead TSOP Type I | |
| | CY62128-70ZAC | ZA32 | 32-Lead STSOP Type I | |
| | CY62128-70ZRC | ZR32 | 32-Lead Reverse TSOP Type I | |
| | CY62128–70SI | S34 | 32-Lead 450-Mil SOIC | Industrial |
| | CY62128–70ZI | Z32 | 32-Lead TSOP Type I | |
| | CY62128-70ZAI | ZA32 | 32-Lead STSOP Type I | |
| | CY62128-70ZRI | ZR32 | 32-Lead Reverse TSOP Type I | |
| | CY62128L–70SC | S34 | 32-Lead 450-Mil SOIC | Commercial |
| | CY62128L–70ZC | Z32 | 32-Lead TSOP Type I | |
| | CY62128L-70ZAC | ZA32 | 32-Lead STSOP Type I | |
| | CY62128L-70ZRC | ZR32 | 32-Lead Reverse TSOP Type I | |
| | CY62128L–70SI | S34 | 32-Lead 450-Mil SOIC | Industrial |
| | CY62128L–70ZI | Z32 | 32-Lead TSOP Type I | |
| | CY62128L-70ZAI | ZA32 | 32-Lead STSOP Type I | |
| | CY62128L-70ZRI | ZR32 | 32-Lead Reverse TSOP Type I | |
| | CY62128LL–70SC | S34 | 32-Lead 450-Mil SOIC | Commercial |
| | CY62128LL–70ZC | Z32 | 32-Lead TSOP Type I | |
| | CY62128LL-70ZAC | ZA32 | 32-Lead STSOP Type I | |
| | CY62128LL-70ZRC | ZR32 | 32-Lead Reverse TSOP Type I | |
| | CY62128LL–70SI | Z32 | 32-Lead 450-Mil Type I | Industrial |
| | CY62128LL-70ZI | Z32 | 32-Lead TSOP Type I | |
| | CY62128LL-70ZAI | Z32 | 32-Lead STSOP Type I | |
| | CY62128LL-70ZRI | ZR32 | 32-Lead Reverse TSOP Type I | |

Document #: 38–00524–B

## Package Diagrams

**32-Lead (450 MIL) Molded SOIC S34**

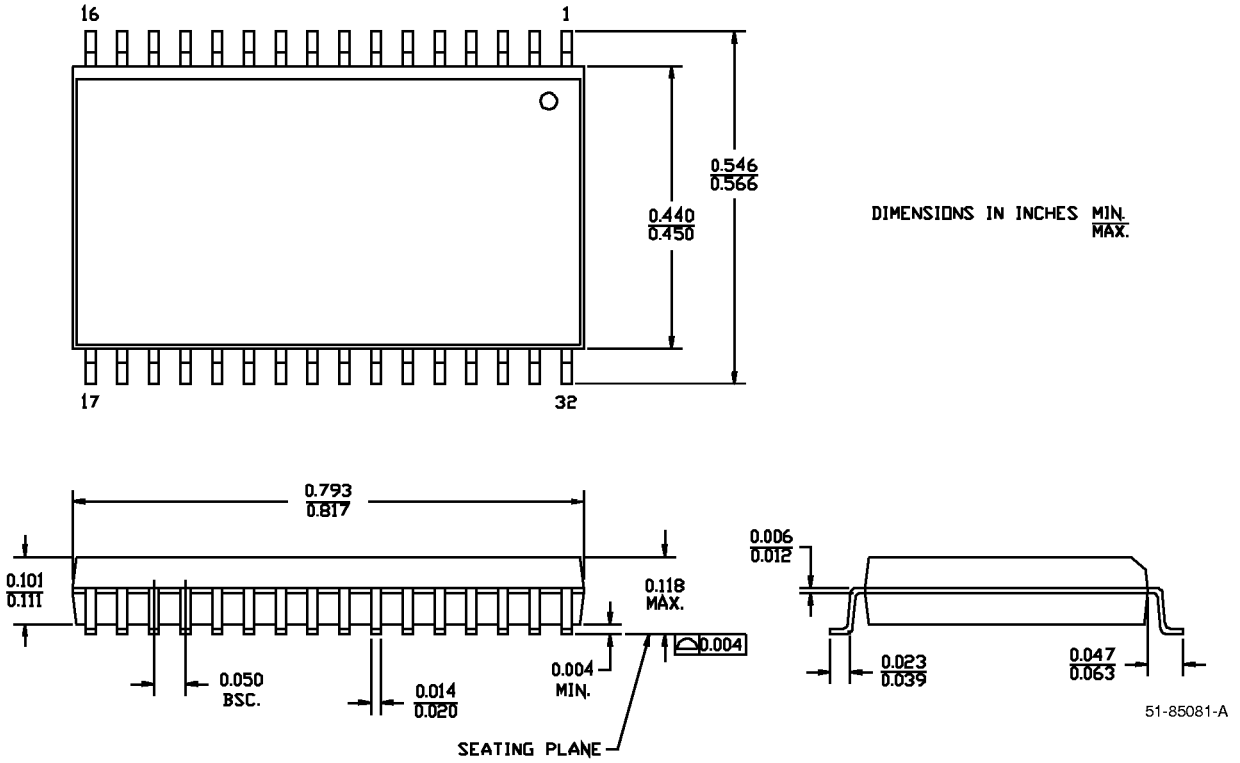


**32-Lead Thin Small Outline Package Z32**

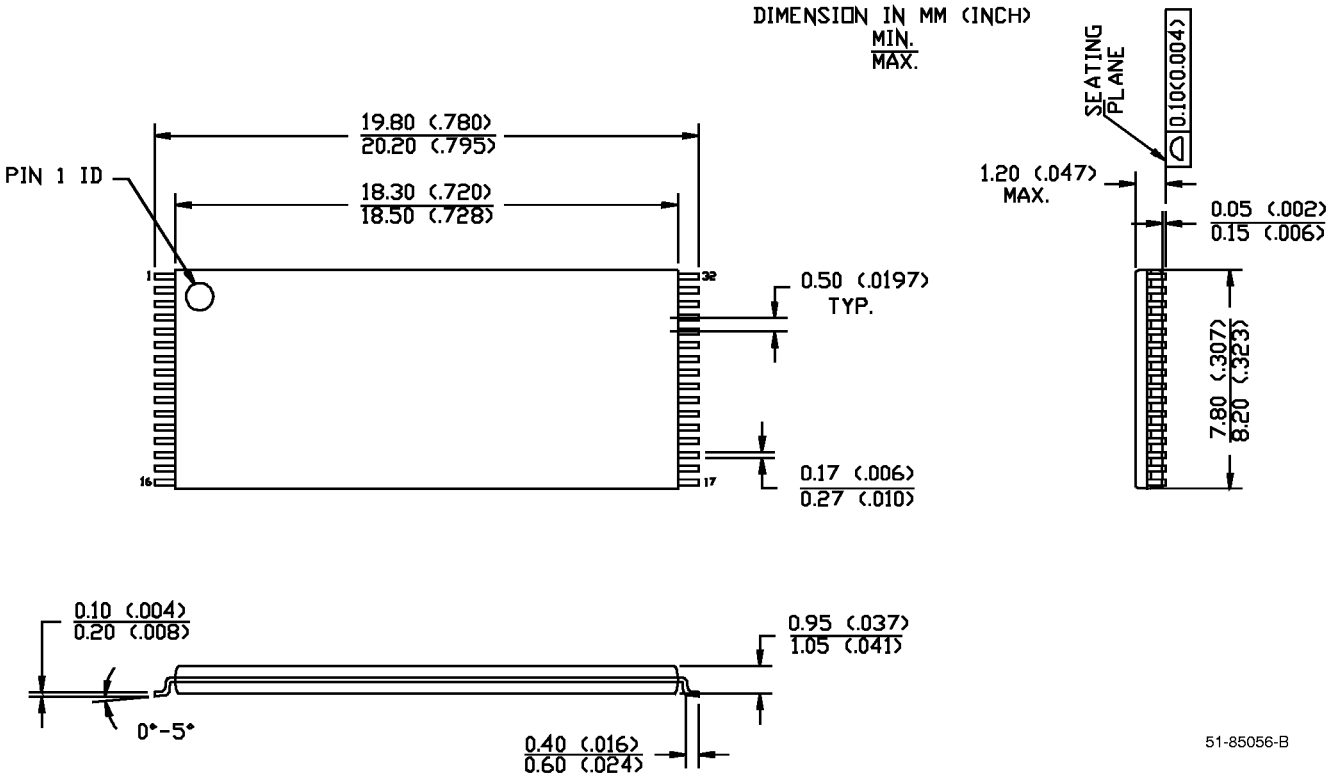

## Package Diagrams (continued)

### 32-Lead Shrunk Thin Small Outline Package ZA32

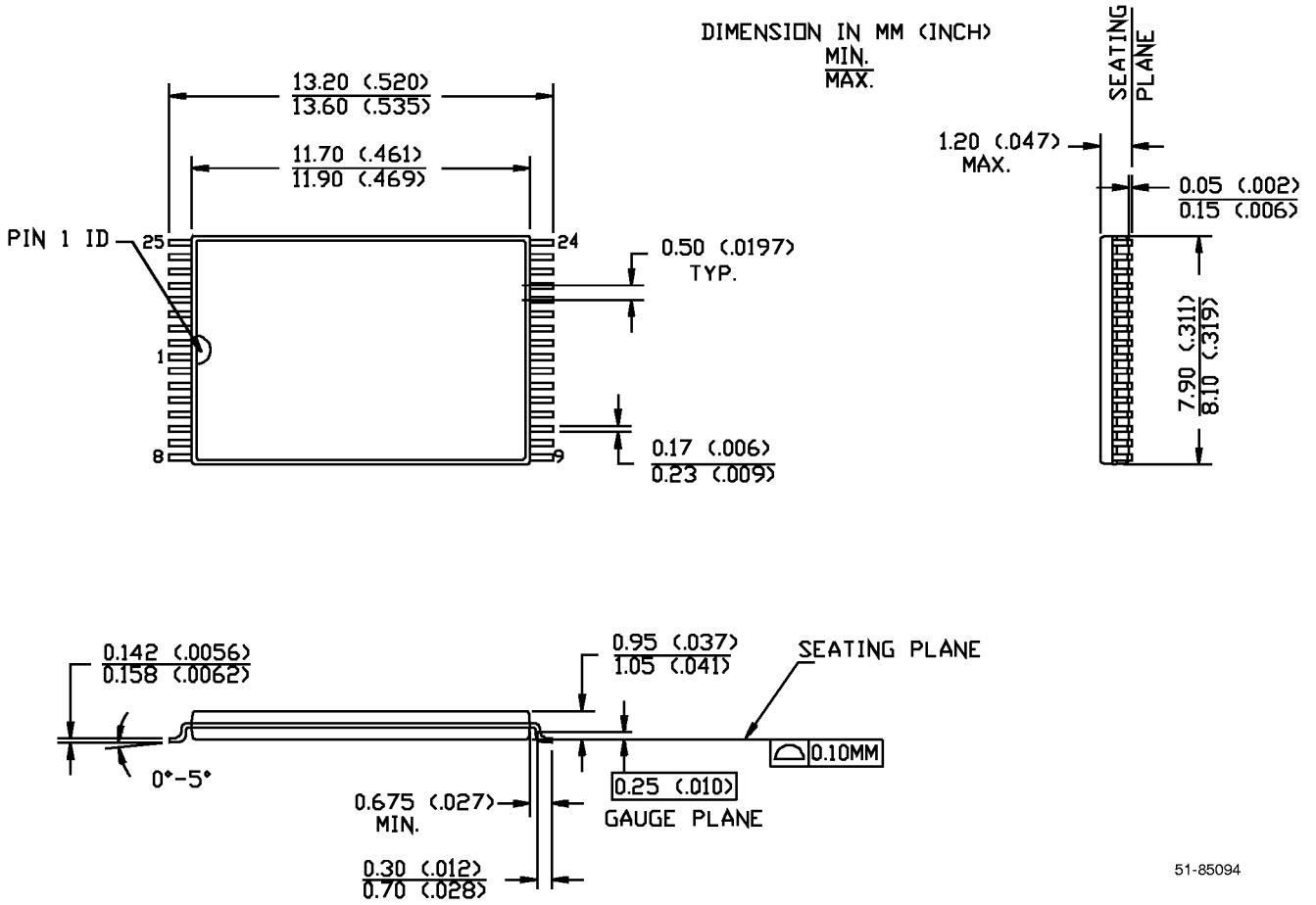


### 32-Lead Reverse Thin Small Outline Package ZR32