MOC8080

OPTICALLY COUPLED ISOLATOR PHOTODARLINGTON OUTPUT

APPROVALS

- UL recognised, File No. E91231

DESCRIPTION

The MOC8080 is an optically coupled isolator consisting of an infrared light emitting diode and NPN silicon photodarlington in a space efficient dual in line plastic package.

FEATURES

- Options :-
  10mm lead spread - add G after part no.
  Surface mount - add SM after part no.
  Tape&reel - add SMT&R after part no.
- High Current Transfer Ratio
- High BVceo (55V)
- High Isolation Voltage ($5.3kV_{RMS}$, $7.5kV_{PK}$)
- All electrical parameters 100% tested
- Custom electrical selections available

APPLICATIONS

- Computer terminals
- Industrial systems controllers
- Measuring instruments
- Signal transmission between systems of different potentials and impedances

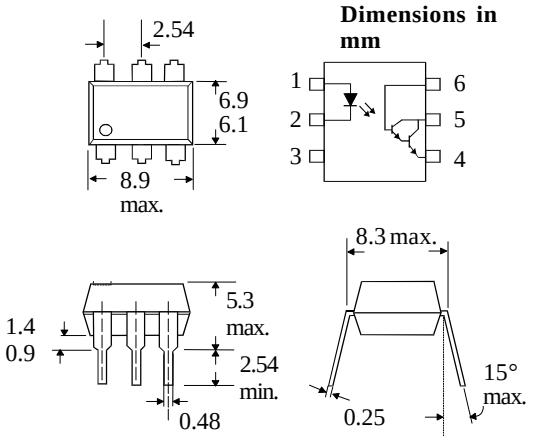

ABSOLUTE MAXIMUM RATINGS
(25°C unless otherwise specified)

Storage Temperature	-55°C to + 150°C
Operating Temperature	-55°C to + 100°C
Lead Soldering Temperature (1/16 inch (1.6mm) from case for 10 secs)	260°C

INPUT DIODE

Forward Current	80mA
Reverse Voltage	5V
Power Dissipation	100mW

OUTPUT TRANSISTOR

Collector-emitter Voltage BV_{CEO}	55V
Collector-base Voltage BV_{CBO}	55V
Emitter-collector Voltage BV_{ECO}	5V
Power Dissipation	150mW

POWER DISSIPATION

Total Power Dissipation (derate linearly 3.3mW/°C above 25°C)	250mW

OPTION SM
SURFACE MOUNT

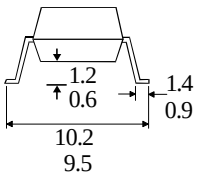

OPTION G

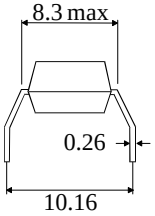

ISOCOM COMPONENTS LTD
Unit 25B, Park View Road West,
Park View Industrial Estate, Brenda Road
Hartlepool, Cleveland, TS25 1YD
Tel: (01429) 863609 Fax :(01429) 863581

ELECTRICAL CHARACTERISTICS (T_A = 25°C Unless otherwise noted)

PARAMETER		MIN	TYP	MAX	UNITS	TEST CONDITION
Input	Forward Voltage (V_F)		1.2	1.5	V	I_F = 10mA
	Reverse Current (I_R)			10	µA	V_R=3V
Output	Collector-emitter Breakdown (BV_{CEO})	55			V	I_C = 1mA (note 2)
	Collector-base Breakdown (BV_{CBO})	55			V	I_C = 100µA
	Emitter-collector Breakdown (BV_{ECO})	5			V	I_E = 100µA
	Collector-emitter Dark Current (I_{CEO})			100	nA	V_{CE}=10V
Coupled	Output Collector Current (I_C)(Note 2)	50			mA	10mA I_F, 5V V_{CE}
	Collector-emitter Saturation Voltage $V_{CE(SAT)}$			1.0	V	1mA I_F, 1mA I_C
	Input to Output Isolation Voltage V_{ISO}	5300 7500			V_{RMS} V_{PK}	(note 1) (note 1)
	Input-output Isolation Resistance R_{ISO}	$5x10^{10}$			Ω	V_{IO}=500V (note 1)
	Output Turn on Time ton Output Turn off Time toff Output Rise Time tr Output Fall Time tf		3.5 95 1 2		µs µs µs µs	V_{CC}=10V, I_F=5mA, R_L = 100Ω , fig.1

Note 1 Measured with input leads shorted together and output leads shorted together.
Note 2 Special Selections are available on request. Please consult the factory.

FIGURE 1

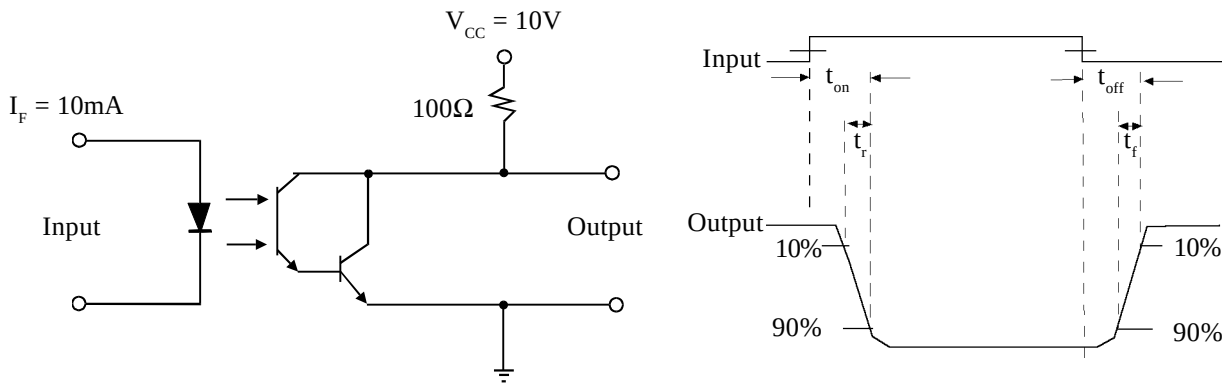

Collector Power Dissipation vs. Ambient Temperature

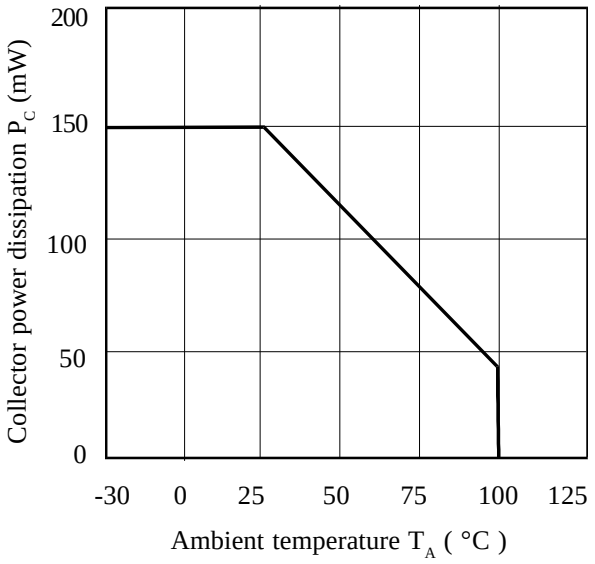

Current Transfer Ratio vs. Forward Current

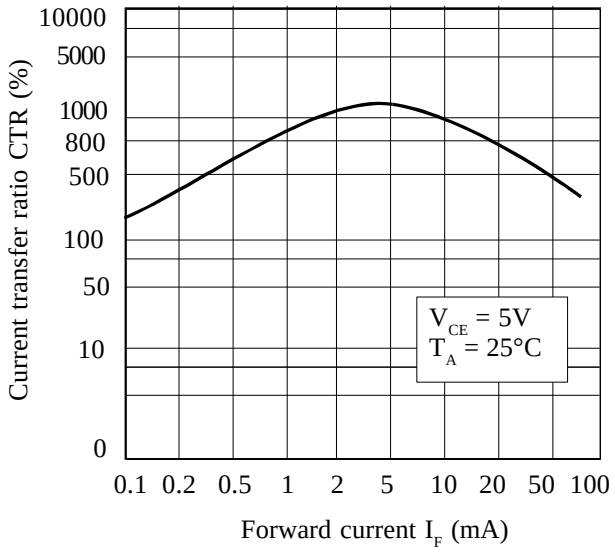

Forward Current vs. Ambient Temperature

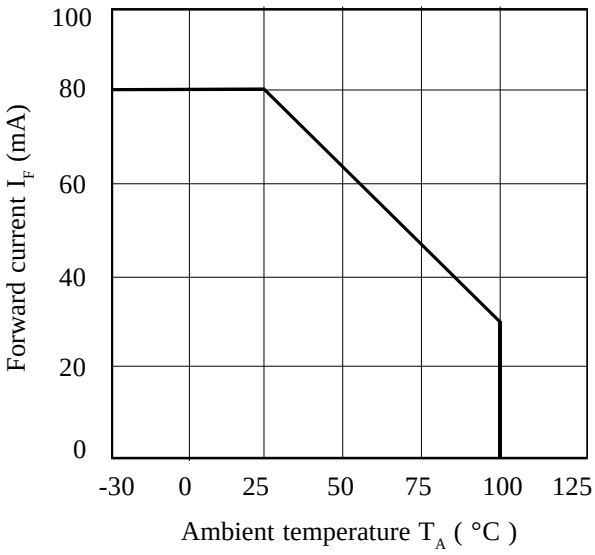

Collector Current vs. Collector-emitter Voltage

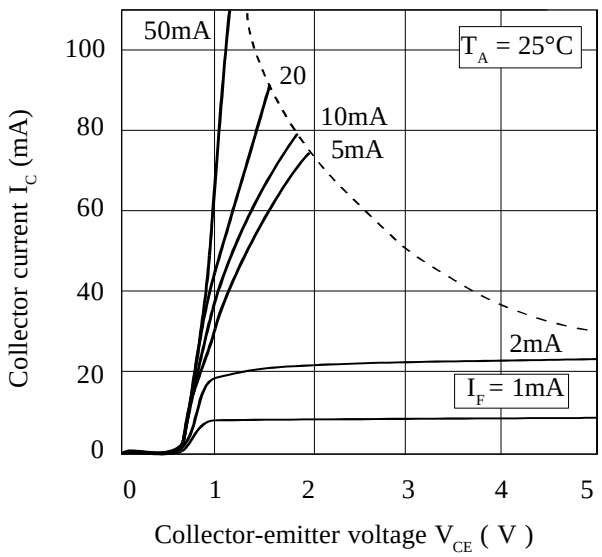

Collector-emitter Saturation Voltage vs. Ambient Temperature

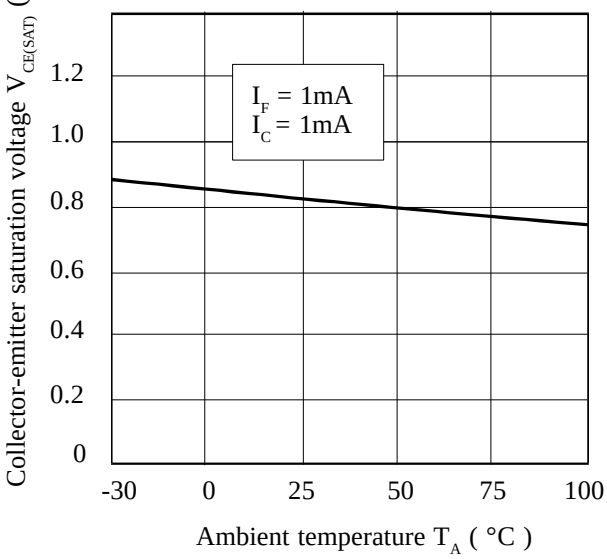

Normalised Current Transfer Ratio vs. Ambient Temperature