RAC

●Features

1. High-density SMD packaging gives higher productivity and reduces assembly costs.
2. Stability Class : 5%

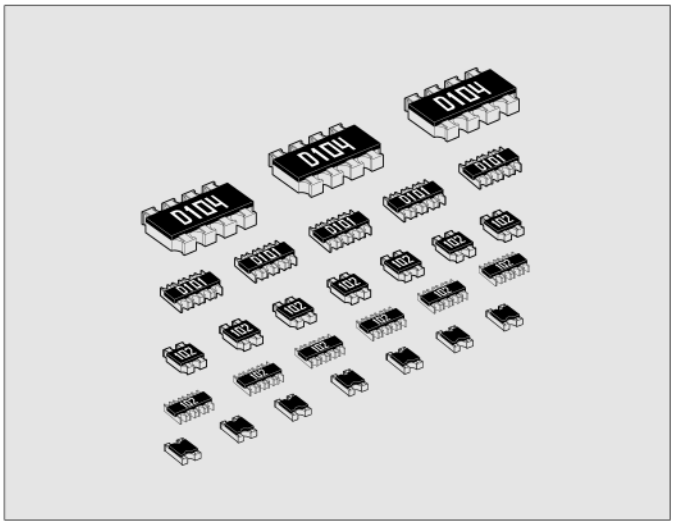

●Dimensions and Circuits

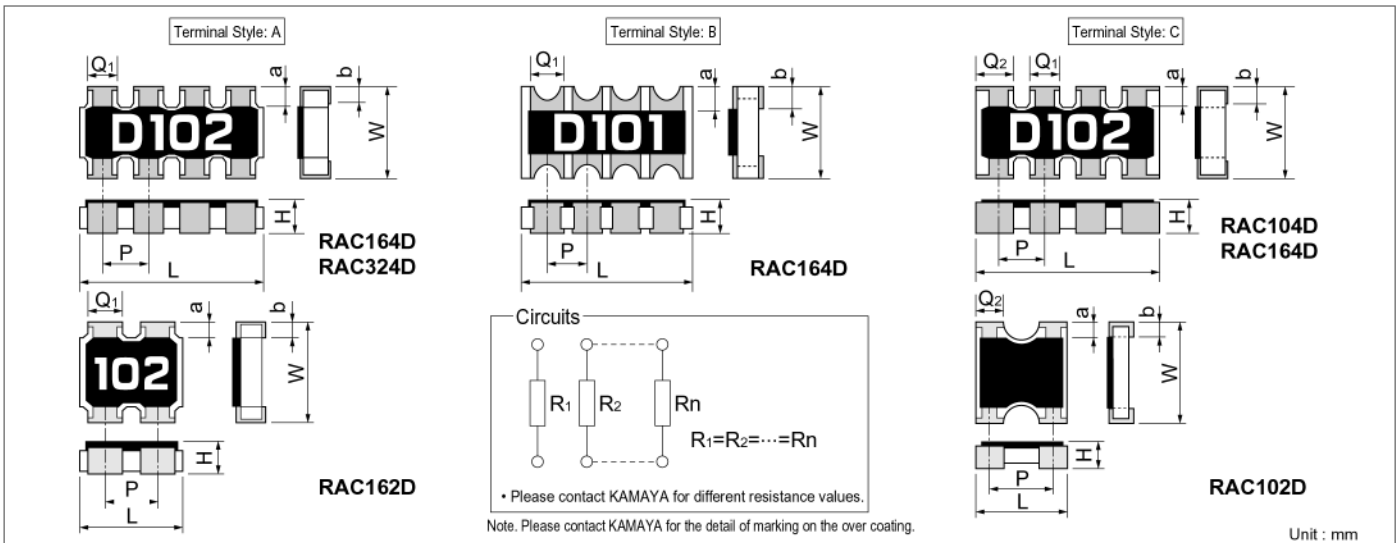

Note. Please contact KAMAYA for the detail of marking on the over coating.

Unit : mm

Style	Terminal Style	L	W	H	Q_1	*Q_2	a	b	*P	*Unit weight/pc.
RAC102D	C	1.0 ±0.05	1.0±0.05	0.35±0.05	–	0.33	0.15±0.10	$0.25^{+0.05}_{-0.10}$	0.65	1.1mg
RAC104D	C	2.0 ±0.1	1.0±0.1	0.35±0.05	0.35±0.1	0.45	0.15±0.10	0.25±0.10	0.5	2.1mg
RAC162D	A	1.6 ±0.1	1.6±0.1	0.5 ±0.1	0.5 ±0.1	–	0.25±0.10	$0.25^{+0.15}_{-0.10}$	0.8	3.5mg
RAC164D	A	3.2 ±0.1	1.6±0.1	0.5 ±0.1	0.5 ±0.1	–	0.25±0.10	0.2 ±0.1	0.8	7mg
	B	3.2 ±0.1	1.6±0.1	0.6 ±0.1	0.45±0.05	–	0.35±0.15	0.45±0.10	0.8	10mg
	C	3.2 ±0.1	1.6±0.1	0.5 ±0.1	0.4 ±0.15	0.6	0.3 ±0.2	0.25±0.15	0.8	7mg
RAC324D	A	5.08±0.20	3.1±0.2	0.55±0.10	0.8 ±0.2	–	0.5 ±0.2	0.3 ±0.2	1.27	27mg

*Values for reference

●Part Number Description

Example

Style: RAC | 16 | 2 | D — 103 — J — A — B

Product Type
RAC

Size	
10	W:1.0mm
16	W:1.6mm
32	W:3.2mm

No. of Elements	
2	2-Elements
4	4-Elements

Circuits	
D	Isolation

Rated Resistance	
E24 Series e.g.:103=10k ohm	Resistor
JP	Jumper

Tolerance on Rated Resistance		
F	±1%	Resistor
J	±5%	Resistor
None	———	Jumper

Terminal Style		
A	Convex Type	Without corner
C	Convex Type	With corner
B	Concave Type	

* Packaging & Standard Qty. (Min.)			
B	Bulk (Loose Package)	1,000pcs.	All Styles
TH	Paper Tape (2 mm pitch)	10,000pcs.	RAC102D RAC104D
TP	Paper Tape	5,000pcs.	RAC162D RAC164D
TE	Embossed Tape	4,000pcs.	RAC324D

*Refer to Tape and Packaging information on pages 38 and 39.

FIXED CHIP RESISTOR NETWORKS; RECTANGULAR TYPE RAC

●Ratings

Style	Rated Dissipation at 70°C W/Element	Rated Dissipation at 70°C W/pc.	Tolerance on Rated Resistance	Rated Current of Jumper A	Limiting Element Voltage V	Temperature Coefficient of Resistance 10^{-6}/°C	Rated Resistance Range	Preferred Number Series for Resistors	Isolation Voltage V	Category Temperature Range °C
RAC102D	0.063	0.125	J(±5%)	1.0	25	±200	10Ω～1MΩ	E24	50	−55～+125
RAC104D		0.25								
RAC162D		0.125			50				100	
RAC164D		0.25	F(±1%)J(±5%)							
RAC324D	0.125	0.5	J(±5%)	2.0	200				400	

Note1. Rated Voltage = $\sqrt{(\text{Rated Dissipation})\times(\text{Rated Resistance})}$. (d.c. or a.c. r.m.s. Voltage)
Note2. Limiting Element Voltage can only be applied to resistors when the resistance value is equal to or higher than the critical resistance value.

●Derating Curve

The derated values of dissipation for temperatures in excess of 70°C shall be indicated by the following Curve.
(For Jumpers the load current shall be derated according to the Derating Curve)

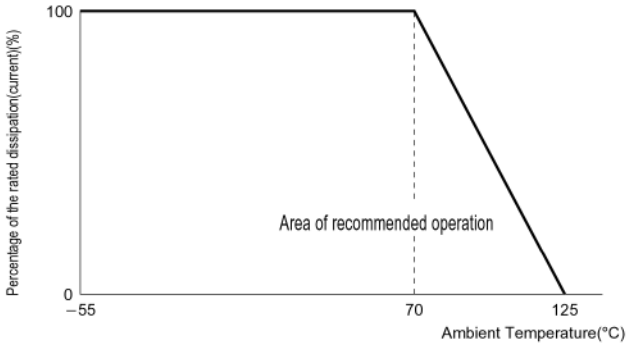

●Climatic Category

55/125/56

Lower Category Temperature	−55°C
Upper Category Temperature	+125°C
Duration of the Damp heat, Steady-State Test	56 days

●Performance Characteristics JIS C 5201-1 : 1998

Description	Requirements	Test Methods	
Voltage proof	No breakdown or flashover R≥1G ohm	Clause 4.7	RAC102D, 104D 50Va.c.,60s RAC162D, 104D 100Va.c.,60s RAC324D 400Va.c.,60s
Variation of resistance with temperature	See Ratings Table	Clause 4.8	Measuring temperature : +20°C/−55°C/ +20°C/+125°C/+20°C
Overload	ΔR≤±(1%+0.05 ohm) No visible damage, legible marking	Clause 4.13	The applied voltage shall be 2.5 times of the rated voltage or twice of the limiting element voltage, whichever is the less severe, 2s.
Solderability	In accordance with Clause 4.17.4.5	Clause 4.17	235°C, 2s
Resistance to soldering heat	ΔR≤±(1%+0.05 ohm)	Clause 4.18	After immersion into the flux, the Immersion into solder shall be carried out in Solder bath at 260°C for 5s.
Rapid change of temperature	ΔR≤±(1%+0.05 ohm) No visible damage	Clause 4.19	5 cycles between −55°C and +125°C.
Climatic sequence	ΔR≤±(5%+0.1 ohm) No visible damage	Clause 4.23	Dry/Damp heat(12+12h cycle), first cycle./ Cold/Damp heat(12+12h cycle), remaining cycle./ D.C.Load.
Damp test, steady state	ΔR≤±(5%+0.1 ohm) No visible damage, legible marking	Clause 4.24	40°C, 95%R.H., 56 days, test a) and b) of Clause 4.24.2.1
Endurance at 70°C	ΔR≤±(5%+0.1 ohm) No visible damage	Clause 4.25.1	Rated voltage, 1.5h "ON", 0.5h "OFF", 70°C, 1,000h.
Endurance at the upper category temperature	ΔR≤±(5%+0.1 ohm) No visible damage	Clause 4.25.3	125°C, no-load, 1,000h.
Adhesion	No visible damage	Clause 4.32	5N, 10s
Bend strength of the face plating	ΔR≤±(1%+0.05 ohm)	Clause 4.33	Amount of bend : 3 mm