Schematic:

REV.	ECN NO.	DESCRIPTION	DATE	APPD
A	REL		31/11/2009	

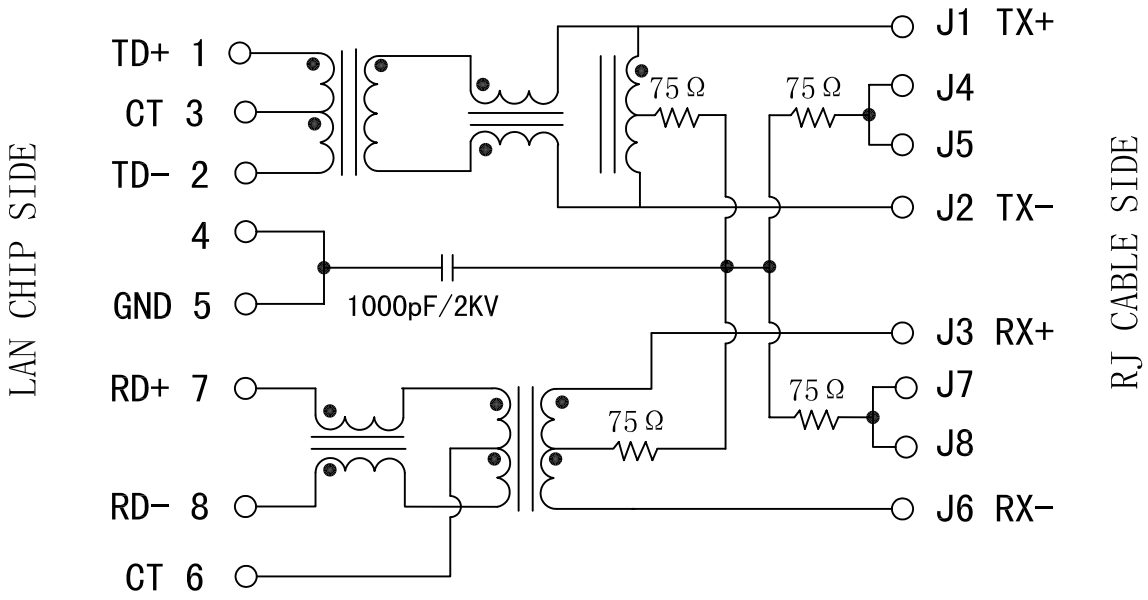

ELECTRICAL SPECFICATIONS @25℃

1. Turn Ratio(±2%):
   TX=1CT:1 RX=1CT:1CT
2. Inductance OCL:
   350uH MIN @ 100KHz,0.1V,8mA DC Bias
3. Insertion Loss:
   -1.0dB MAX @ 1-65MHz
4. Return Loss:
   -20dB MIN @ 1-10MHz
   -16dB MIN @ 10-30MHz
   -12dB MIN @ 30-60MHz
   -10dB MIN @ 60-100MHz
5. Cross talk:
   -40dB MIN @ 1-30MHz
   -35dB MIN @ 30-60MHz
   -30dB MIN @ 60-100MHz
6. Common Mode Rejection:
   -30dB MIN @ 1-50MHz
   -20dB MIN @ 50-150MHz
7. Hipot Test: 1500Vrms MIN
8. Operating Temperature Range: 0℃ TO 70℃.

YELLOW/LEFT LED

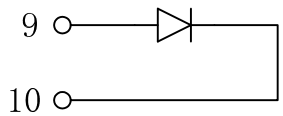

GREEN/RIGHT LED

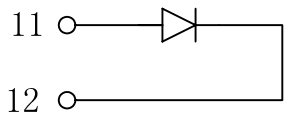

X:X ±0.25	APPD:	LINK-PP INT'L TECHNOLOGY CO., LIMITED	
X:XX ±0.10	CHKD:	TITLE: RJ45 Connector with 10/100 Base-TX Integrated Magnetics	
X:XXX ±0.05	DR: TOM		
ANGLES ±1°	UNIT: mm	PART NO.: LPJ0026GDNL	
SCALE: 2/1	SHEET: 1/2	REV: A	DWG NO.: LP09111308

Mechanical:

REV.	ECN NO.	DESCRIPTION	DATE	APPD
A	REL		13/11/2009	

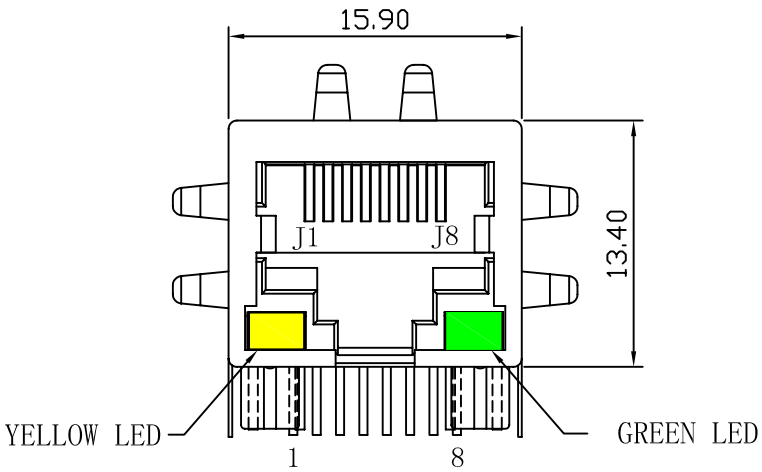

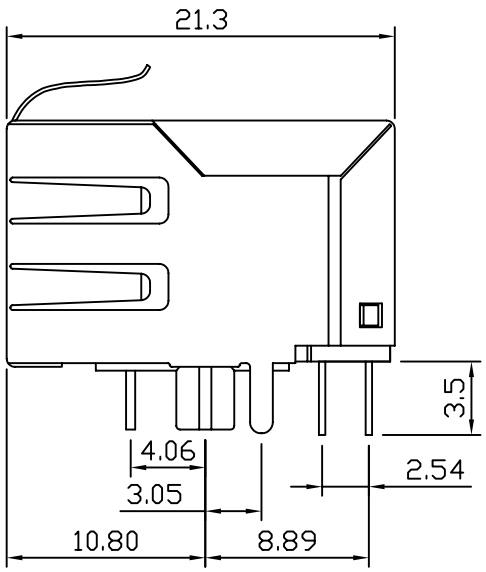

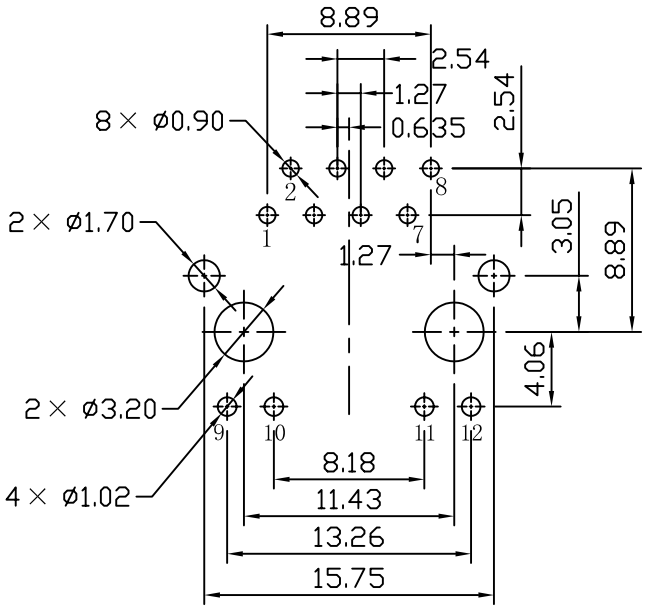

SUGGESTED PCB LAYOUT(TOP VIEW)

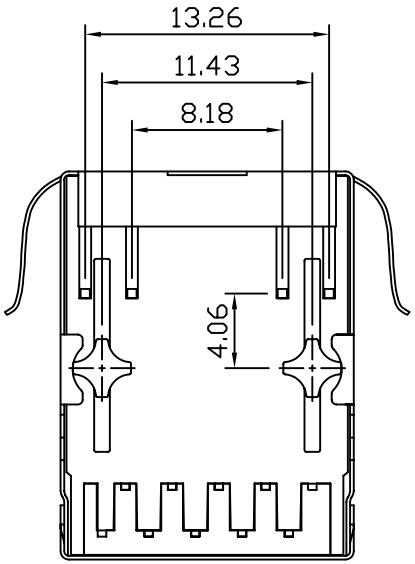

NOTES:

1. Designed to support application, such as SOHO(ADSL modems), LAN-on-Motherboard(LOM), hub and Switches.
2. Meets IEEE 802.3 specification
3. Connector Materials:
   Housing: Thermoplastic UL94V-0
   Contact/Shield: Copper alloy
   Shield plating: Nickel
   Contact plating: Gold 6 micro-inches min. In contact area.
4. Wave solder tip temperature: 265℃ Max
   Wave solder tip temperature time: 5 Sec Max

RoHS 2002/95/EC

X:X ±0.25	APPD:	LINK-PP INT'L TECHNOLOGY CO., LIMITED	
X:XX ±0.10	CHKD:	TITLE: RJ45 Connector with 10/100 Base-TX Integrated Magnetics	
X:XXX ±0.05	DR: TOM		
ANGLES ±1°	UNIT: mm	PART NO.: LPJ0026GDNL	
SCALE: 2/1	SHEET: 2/2	REV: A	DWG NO.: LP09111308