DATA SHEET
WPSPG Spark Gap Protectors – HS Series

Part Numbering System

WPSPG	-	20	HS	200
(1)		(2)	(3)	(4)

(1) World Products Spark Gap Protector

(2) DC Spark-over Voltage
Tolerance: (Example: 20=20% tolerance)

(3) Series Type
HS= High Current Surface Mount Series

(4) DC Spark-over Voltage:
(Example: 200 = 200V)

FEATURES:

1. RoHS Compliant and Halogen Free
2. UL497B – File #E135015 (see specific voltage values)
3. Fast Responding
4. Low Capacitance
5. Zero leakage current
6. Stable electrical characteristics over time
7. Can withstand repeated surges
8. Symmetrical

WORLD PRODUCTS, LLC
19654 Eighth Street East || P.O. Box 517 || Sonoma, CA 95476
[P] 707.996.5201 [F] 707.996.3380 [E] sales@worldproducts.com [W] www.worldproducts.com

DATA SHEET
WPSPG Spark Gap Protectors – HS Series

DIMENSION

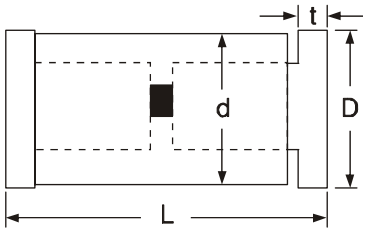

Item	
L	6.0±0.5
D	3.3±0.5
d	3.1±0.5
t	0.4±0.1

ELECTRICAL CHARACTERISTICS

Part Number	DC Spark-Over Voltage	Minimum Insulation Resistance		Maximu Capacitance (1KHz-6VMAX)	Surge current capacity (8/20μs)
	Vs(V)	Test Voltage(V)	IROHM(MΩ)	C(pf)	(A)
*WPSPG-XXHS140	140	50	100	0.8	3000
*WPSPG-XXHS200	200	100	100	0.8	3000
*WPSPG-XXHS300	300	100	100	0.8	3000
*WPSPG-XXHS400	400	250	100	0.8	3000
*WPSPG-XXHS500	500	250	100	0.8	3000
WPSPG-XXHS700	700	500	100	0.8	3000
WPSPG-XXHS1000	1000	500	100	0.8	3000

Note: Vs±XX% (DC Spark-over Voltage Tolerance 30% and 20%),140V device is only available in 30% tolerance.

*UL 497B recognized (30% tolerance only).

WORLD PRODUCTS, LLC
19654 Eighth Street East || P.O. Box 517 || Sonoma, CA 95476
[P] 707.996.5201 [F] 707.996.3380 [E] sales@worldproducts.com [W] www.worldproducts.com

DATA SHEET
WPSPG Spark Gap Protectors – HS Series

TEST METHODS AND RESULTS

ITEM	TEST METHOD	STANDARD
Static Life	10KV with 1500pf condenser is discharged through 2KΩ resistor. 200 times at an interval of 10sec.	Rate-of-change, within±30% insulation resistance & capacitance, conformed to rated spec.
Cold Resistance	Measurement after -40℃/1000 HRS & normal temperature/2 HRS.	Features are conformed to rated spec.
Heat Resistance	Measurement after 125℃/1000 HRS & normal temperature/2 HRS.	
Humidity Resistance	Measurement after humidity 90~95%(45℃) /1000 HRS & normal temperature/2 HRS.	
Temperature Cycle	10 times repetition of cycle -40℃/30min →normal,temp/2 min →125℃/30min, measurement after normal temp/2 HRS.	
Solder Ability	Apply flux and immerse in molten solder 230±5℃ for 3sec up to the point of 1.5mm From body. Check for solder adhesion.	Lead wire is evenly covered by solder.
Solder Heat	Measurement after lead wire is dipped up to the point of 1.5mm from body into 260±5℃ solder for 10sec.	Conformed to rated spec.
Pull Strength	Apply 0.5kg load for 10sec.	Lead shall not pull out or snap.
Flexural Strength	Bend lead wire at the point of 2mm from body under 0.25 load and back to its original point. Repeat 1 time.	

WORLD PRODUCTS, LLC
19654 Eighth Street East || P.O. Box 517 || Sonoma, CA 95476
[P] 707.996.5201 [F] 707.996.3380 [E] sales@worldproducts.com [W] www.worldproducts.com

DATA SHEET
WPSPG Spark Gap Protectors – HS Series

Taping Specifications

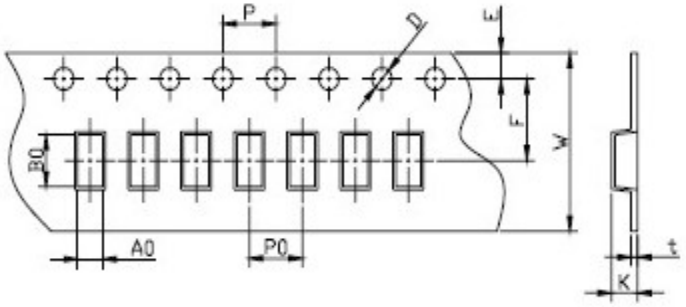

Item	Size (mm)
P	4.0±0.1
P0	8.0±0.1
W	16.00±0.2
F	7.5±0.05
E	1.75±0.1
D	Φ1.5±0.1
K	3. 5±0.1
t	0.5Max
A0	3.5 ± 0.1
B0	6.5 ± 0.1

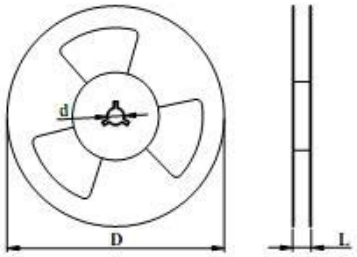

NOTE: 2000 pcs per reel.

Item	Size (mm)
D	330mm
d	13mm
L	20mm

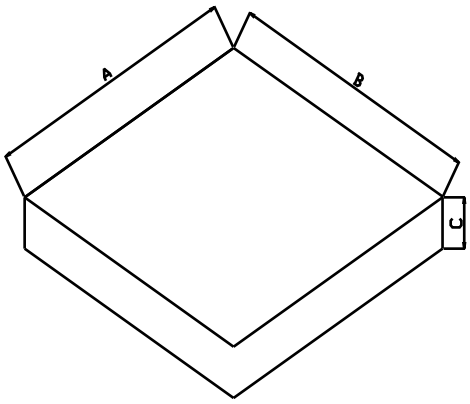

Item	Size (mm)
A	330
B	330
C	40

Rev. 1.3 – 080612